E04496

S. H. JOHNSON & CO.'S

PYRAMID FILTER-PRESSES

ARE THE BEST AND SIMPLEST

FOR ALL SUGAR FACTORY WORK

ADVANTAGES

(1) Give the freest outlet for filtrate.
(2) Efficiently support the cloths with least obstruction.
(3) Are most easily cleaned.

THEREFORE THEY ARE THE MOST EFFICIENT AND BEST.

PATENT HYDRAULIC HAND CLOSING GEAR

WITH LOCKING DEVICE

Is the best closing gear for large filter-presses—saves labour, ensures tight joints, indicates exact closing pressure, and prevents breakage. The locking prevents pressure leaking off.

PATENT HYDRAULIC COLLARS

Are the best jointings on the side passages; the internal working pressure ensures perfect joints; with these collars, simple cloths without holes, hung over the plates, suffice.

MAKERS OF

PUMPS, AIR-COMPRESSORS, AUTOMATIC AIR RAMS, MONTJUS,

AND ALL APPLIANCES FOR WORKING FILTER-PRESSES.

☞ *See pp. 484 & 485 in this Work, and Fig. 153.*

S. H. JOHNSON & CO., Ltd.

ENGINEERING WORKS

STRATFORD, London, E.

Telegraphic Address: "FILTRUM, LONDON."

RANSOMES, SIMS & JEFFERIES

LIMITED.

Made of the best materials throughout.

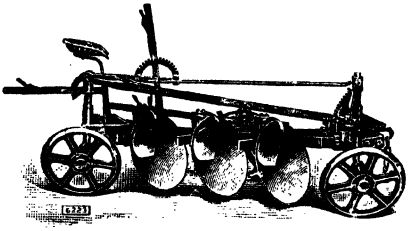

Made in sizes to take 1, 2, 3 and 4 furrows.

THREE-FURROW DISC PLOUGH.

Ransomes' Disc Ploughs are indispensable when the land is too dry for the ordinary Share Plough to enter. They have already been successfully used in the West Indies, and are in increasing demand in all parts of the world.

Great strength in all parts.

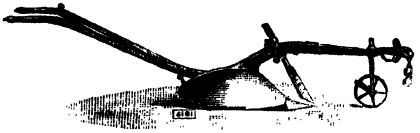

Great clearance under beam.

Y.C.P.W. PLOUGH.

This Plough has a deep steel breast, and can be used for laying up high banks as well as for ordinary ploughing. It is equally useful for opening deep trenches for planting slips of sugar cane. It has the reputation of being the best Share Plough for the West Indies.

Specially designed for sugar cultivation.

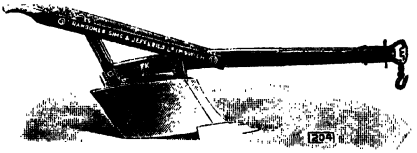

Simple and strong construction.

F.K. PLOUGH.

This Ridging Plough is specially adapted for ridging up sugar cane, throwing the earth on to the canes on either side. It can be easily turned in a small compass.

PLOUGHS FOR ALL REQUIREMENTS AND EVERY CONDITION OF SOIL

ORWELL WORKS, IPSWICH, ENGLAND

FAWCETT, PRESTON & CO., LTD.

ENGINEERS, LIVERPOOL

Telegraphic Address: "Fawcett, Liverpool."

Codes used { A B C (4th & 5th Editions). A1 and Western Union.

London Office: 69 VICTORIA STREET, S.W.

HEAVY

Cane Grinding

PLANTS

AND ALL OTHER CLASSES OF

SUGAR MACHINERY

Complete Sugar Factories

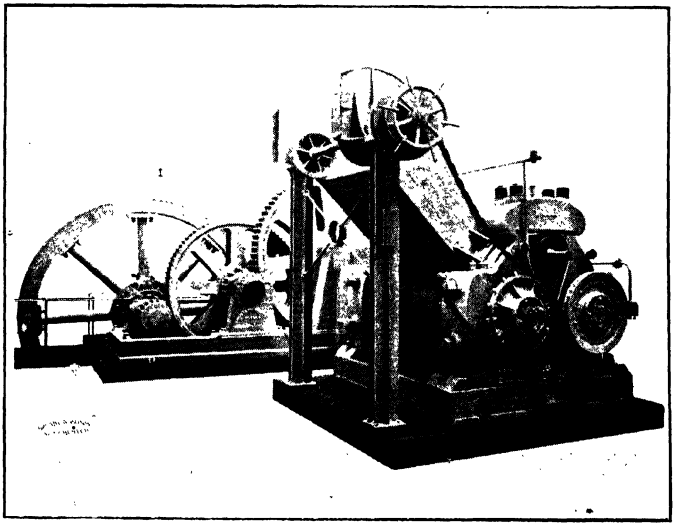

IMPROVED CANE MILL, with Steel Compound Gearing and Engine.

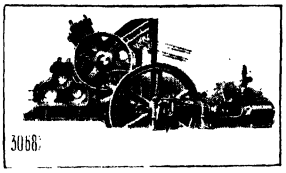

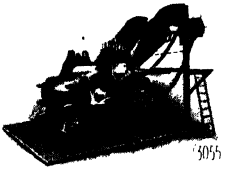

COMPLETE
CANE SUGAR FACTORIES.
3, 6 & 9 ROLL CRUSHING MILLS.
"KRAJEWSKI" CRUSHERS.
GEARING. ENGINES.
BOILERS.

MANLOVE, ALLIOTT & CO.

LIMITED,

ENGINEERS, NOTTINGHAM, ENGLAND.

CONVEYORS & ELEVATORS.
CENTRIFUGALS.
GRANULATORS, &c.

Telegrams: "Manloves, Nottingham."
Codes: Lieber's, A 1, Commercial, A B C (4th & 5th Ed.), Business.

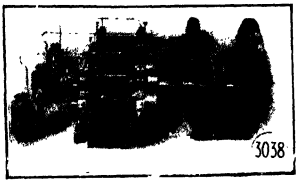

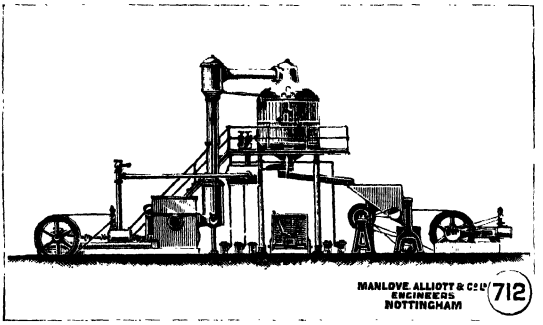

VACUUM PANS.
DEFECATORS. ELIMINATORS.
MULTIPLE EFFECTS.
EVAPORATORS, &c.

SUGAR MACHINERY

OF EXCEPTIONAL STRENGTH,
HIGH EFFICIENCY, AND WITH ALL
THE LATEST IMPROVEMENTS.

MANLOVE, ALLIOTT & CO., LTD.

ENGINEERS, **NOTTINGHAM**, ENGLAND.

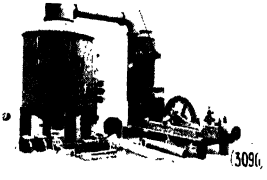

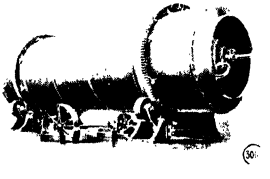

JAMES BUCHANAN & SON

Caledonia Foundry & Engine Works

LIVERPOOL, N.

Telegrams: "BUCHANAN," Liverpool.

Codes: A 1 and A B C.

MANUFACTURERS OF

SUGAR-MAKING MACHINERY

OF ALL DESCRIPTIONS

DESIGNERS AND BUILDERS OF

COMPLETE PLANTS for Cane Sugar Factories

Of the most modern design and up to any capacity, for the manufacture of **RAW OR WHITE SUGARS.**

CANE MILLS, with Three, Six, or Nine Rollers

With or without **CANE CRUSHERS.**

COMPLETE REFINERIES

Of any capacity, to make **WHITE SUGARS** with or without the use of Animal Charcoal.

VACUUM PANS AND EVAPORATORS

OF IMPROVED CONSTRUCTION.

JUICE HEATERS, CRYSTALLISERS IN MOVEMENT

&c. &c.

FRONTISPIECE

SUGAR

A HANDBOOK

FOR PLANTERS AND REFINERS

BEING

A COMPREHENSIVE TREATISE ON THE CULTURE OF SUGAR-YIELDING PLANTS, AND THE MANUFACTURE, REFINING, AND ANALYSIS OF CANE, BEET, PALM, MAPLE, MELON, SORGHUM, AND STARCH SUGARS

WITH

COPIOUS STATISTICS OF THEIR PRODUCTION AND COMMERCE, AND A CHAPTER ON THE DISTILLATION OF RUM.

BY

THE LATE JOHN A. R. NEWLANDS

AND

BENJAMIN E. R. NEWLANDS, F.I.C., F.C.S.

PAST VICE-PRESIDENT OF THE INSTITUTE OF CHEMISTRY AND OF THE SOCIETY OF CHEMICAL INDUSTRY

London

E. & F. N. SPON, LIMITED, 57 HAYMARKET

New York

SPON & CHAMBERLAIN, 123 LIBERTY STREET

1909

PREFACE.

THE last edition of Sugar-Growing and Refining, published twenty years since, having for a long time past been exhausted, it was thought advisable to issue the present Edition, bringing the subject matter closely up to date, and giving a description of the various important inventions and processes which have been devised and practically put in operation during this period. To make the book as complete as possible, it has been necessary to seek advice and assistance in various directions, and the writer wishes particularly to acknowledge the valuable aid he has received from his friends, particularly Mr. J. B. Alliott, Mr. Alfred Chapman, and others; he is also indebted to information given in many foreign and English journals, particularly to the 'International Sugar Journal,' the volumes of which are a mine of information regarding the subject. By leaving out certain parts of the last edition of the book relating to matter which has become more or less obsolete, it has been found possible to introduce a very large amount of new material of a useful character without extending the size of the volume.

B. E. R. NEWLANDS.

1909.

CONTENTS.

INTRODUCTION .. .. xiii–xxxvi

CANE SUGAR.

CHAPTER I.—CULTIVATION OF THE PLANT.

The Plant—Varieties—Structure and Development—Range—Climate—Soil—Tillage—Manuring—Composition of the Canes—Composition of Cane Soils—Manures obtained from Foreign Sources—Manures produced on the Estate—Green-soiling and Rotation of Crops—Laying out an Estate—Drainage—Irrigation—Propagation of the Plant—Propagation from Seed—Planting—Lining Out and Holing—Setting Out the Cuttings—Moulding and Banking—Weeding and Trashing—Ratooning—Harvesting—Windrowing—Diseases and Enemies—Rats—Ants—Pou blanc—Borers—Rust—Sereh—Gumming—Grub—Rind Fungus—Pineapple Disease—Nematodes—Smut—Yields of Cane and Sugar .. .. *pages* 1–100

CHAPTER II.—COMPOSITION OF THE JUICE.

Cane Juice—Crystallisable and Uncrystallisable Sugar—Hydrometers—Mineral Matters—Organic Matters—Granular Matter—Albuminous Matter—Nitrogenous Matter—Effects of the Manufacturing Processes—Synopsis of the Operations entailed in preparing Sugar from Cane Juice .. *pages* 101–120

CHAPTER III.—EXTRACTION OF THE JUICE.

By Crushing the Cane: Roller Mills—Wooden Cane-mill and Water-wheel—Iron Cane-mills—Motors, Fuels, and Furnaces—Defibrators—Maceration—Diffusion—Slicing Machines—Bouscaren's System—Roberts' System—Pumps and Substitutes .. .. *pages* 121–210

CHAPTER IV.—DEFECATION AND CLARIFICATION.

Preliminary Straining—Heat—Steam Defecators and Clarifiers—Chemicals—Lime—Defecation of Juice at a High Temperature—Hatton's Continuous Defecator—Lime Bisulphite—Sulphurous Acid—Lead Acetate—Newlanite—Ehrmannite—Yellow Crystals—Bloomer—Golden Bloom—Filtration *pages* 211–248

CHAPTER V.—CONCENTRATION AND GRANULATION OF THE JUICE.

Open Pans heated by Fire—Pans heated by Steam—Film Evaporators—Fryer's Concretor—Vacuum Pans—Surface Condensation—Entrainment—Working the Vacuum Pan—Molasses—Construction of the Vacuum Pan—Eliminating Pans—Multiple Effects—The Lillie Evaporator—The Kestner Evaporator—Concentration of Syrups by Means of Cold .. .. .. *pages* 249-302

CHAPTER VI.—CURING THE SUGAR.

Simple Drainage—Claying—Vacuum Chest—Centrifugals—Amorphous Sugar *pages* 303-308

CHAPTER VII.—COMPLETE FACTORIES.

A Tropical Sugar Factory—Apparatus used for Extracting the Sugar or the Juice from the Cane—Defecating Apparatus—Vacuum Pans—A Small Model Factory—Cuban and Peruvian Factories Compared .. .. *pages* 309-360

PALM SUGAR.

CHAPTER VIII.

The Palms—Planting—Cutting the Trees and Collecting the Juice—Boiling the Juice—Yield—History .. .. *pages* 361-379

MAPLE SUGAR.

CHAPTER IX.

The Sugar Maple—Maple Sugar—Maple Syrup—Yield .. .. *pages* 380-390

MELON SUGAR.

CHAPTER X.

Melon Sugar .. .. *pages* 391, 392

BEET SUGAR.

CHAPTER XI.—CULTIVATION OF THE PLANT.

The Plant—Composition of the Roots—Climate—Manures—Sowing—Harvesting—Storing—Diseases and Enemies .. .. *pages* 393–421

CHAPTER XII.—EXTRACTION OF THE JUICE.

Purchase—Transport—Cleansing the Roots—Diffusion—Residues *pages* 422–456

CHAPTER XIII.—DEFECATION OF THE JUICE.

Composition of the Juice—Defecation by Lime and Carbonic Acid—Albumen and Pulp Sieves—Juice Heater—Defecation and Saturation Pans—Quicklime—The Kuthe-Anders Process—Lime Kilns—Kilns with Gas Furnaces—Treatment of Lime Scums—Filter Presses—Verley's Ozone Process—Beanes' Ozone Process—Filtration through Gravel—Mechanical Filtration—The "Perfect" Sand Filter .. .. *pages* 457–493

CHAPTER XIV.—CONCENTRATION OF THE SYRUP.

page 494

CHAPTER XV.—CURING THE SUGAR.

First, Second, and Third Sugars—Yields .. .. *pages* 495–500

MOLASSES.

CHAPTER XVI.—PROCESSES FOR THE RECOVERY OF SUGAR FROM RESIDUAL SYRUPS OR MOLASSES.

Composition of Molasses—The Osmose Process of Dubrunfaut—Lime, Baryta and Strontia Processes—Elution Process—Seyferth's Process—Manoury's Elution Process—Steffen's Process—Strontia Process—Sucrate of Hydro-carbonate of Lime Process—Acetic Acid Process—Margueritte's Process—Alum Process (1) Precipitation, (2) Neutralisation .. .. *pages* 501–513

SORGHUM SUGAR.

CHAPTER XVII.

The Plant—Qualities—Varieties—Manufacture .. .. .. *pages* 514–520

STARCH SUGAR AND OTHER GLUCOSES.

CHAPTER XVIII.

Formation—Principles of Manufacture—Manufacture — Boiling— Neutralisation and Filtration — Evaporation and Refining — Johnson's Method — Jebb's Method—Payen's Method — Manbré's Method — Rössling and Reichardt's Process — Anthon's Method — Boiling — Neutralisation — Evaporation — Capillair Syrup and Sugar—Granulated Starch Sugar—Uses of Starch Sugar and Glucoses .. .. *pages* 521–566

SUGAR REFINING.

CHAPTER XIX.

Selection of a Site for a Refinery—Preparatory Treatment of Raw Sugar—Weinrich's Process—Water-driven Centrifugals—Electrically-driven Centrifugals—Patterson's Centrifugal—Systematic Washing — Ordinary Refining Processes—Solution—Filtration—Decolorisation—Revivification of Char — The Colwell Drier—The Farley Drier—Buchanan and Vickess's Kiln—Weinrich's Char Process—Boiling down—Curing—Old Methods. Crystallisation in Motion — Centrifugals — Weston's Centrifugal Machine — The Hepworth Suspended Centrifugal Machine—Loaf Sugar—Moulded Cube Sugar—Langen's Process—Tietz, Selwig and Lange's Process—Duncan and Newlands' Process—Walker and Patterson's Cube Sugar Process—Adant's Process—Pressed Cube Sugar—Hersey's Cube Sugar Machine—Jasper and Boushey's Process—Pzillas's Cube Process—Granulated Sugar—Hersey's Granulator—Gibb's Granulator—Combination Type of Granulator—Utilisation of the last Syrups of the Refinery—Treacle and Golden Syrup—Invert Sugar, or Saccharum—Processes of Purification—Ozone—Peroxides and Oxidising Agents—Reducing Agents—Salts and Acids—Sucrates—Organic Substances—Electrolysis—Char and Substitutes—Filtration *pages* 567–657

CHAPTER XX.—ANIMAL CHARCOAL OR BONE BLACK, COMMONLY CALLED "CHAR."

Bones — Manufacture — Characteristics of good Char—Dust—Filtration — Decolorising Action—Action on Salts—Washing Char—Re-burning Char—Improvement of Working Char—Removal of Iron .. .. *pages* 658–667

SUGAR ANALYSIS.

CHAPTER XXI.

Impurities in Raw Sugars—Constituents to be Determined—Determination of Sugar—Determination of Glucose—Determination of Glucose and Invert Sugar by the Gravimetric Method—Determination of Ash—Determination of Soluble Ash—Determination of Insoluble Ash—Determination of Moisture—Statement of Results—Determination of the Alkalinity of the Ash—Special Processes—Payen's Process—Fermentation Process—Determination of the Total Sugar by Fehling's Method—Determination of Glucose in Beet Sugars—Patterson's Process—Inversion—Clerget's Method—Raffinose—Cane and Beet Juices—Tables of Specific Gravity and Percentage of Sugar—Beet-roots—Sugar-cane Analysis—Determination of Sugar—Optical Methods—Polarised Light — Polariscopes — Half-shade Instruments — Transition Tint Instruments—Specific Rotatory Power—Analysis of Commercial Glucose or Starch Sugar—Determination of Dextrose by means of Fermentation—Determination by Fehling's Solution—Water—Admixture of Starch Sugar with Refined Sugars—Composition of Commercial Sugars—Analysis of Char—Determination of Moisture, Carbon, Lime, Phosphoric Acid, Magnesia, Peroxide of Iron and Alumina, Organic Matter, Carbonate of Lime—Determination of Carbonate of Lime by Sheibler's Calcimeter—Determination of Sulphuric Acid, Sulphides, Chlorine, Arsenic—Detection of Fluorine—Determination of Nitrogen—Number of Pounds to a Cubic Foot—Apparent Specific Gravity of Char—Real Specific Gravity of Char—Interstices, Pores, and Solid Structure of Char—Determination of the Grist of Char—Decolorising Power of Char—Analyses of Working Chars .. .. .. *pages* 668–728

RUM AND OTHER ALCOHOLIC SPIRITS.

CHAPTER XXII.

Pure Alcohol—Alcohol Percentage Table—Fermentation—Alcoholic Fermentation—Sugar—Water—The Ferment—Heat—Air—Acetous Fermentation—Lactic Fermentation—Viscous Fermentation—Putrid Fermentation—Apparatus—Distillation—Steam Required—Ingredients of the Wash—Arrangement

of a Rum Distillery—Purifying—Colouring—Commerce—Analyses of Rums —Alcohol from Beet—By Rasping and Pressure — Maceration — Direct Distillation of the Roots — Diffusion — Rectification — Yield — Industrial Alcohol—Determination of Alcohol .. .. *pages* 729 784

PRODUCTION AND COMMERCE.

CHAPTER XXIII.

SUGAR PRODUCTION IN VARIOUS COUNTRIES.

Australia—Queensland—New South Wales—Sugar Beet—Argentine Republic—Austria-Hungary — Belgium — Brazil — Bangues or Open-pan Sugars — Retames — Chili — China — Egypt — France—Germany—British Guiana—Holland—Java—Mexico—Natal—The Pacific Islands—Fiji—Hawaii—Peru —The Philippine Islands—Russia—Beetroot Sugar Production in Europe—Spain—United Kingdom—Imports of Cane and Beet Sugar—Consumption —The United States of America—Development of the Beet Sugar Industry—Uruguay—Sugar in the British West Indies—Barbados—Trinidad—Tobago —Grenada—St. Lucia—St. Vincent—Dominica—Montserrat — Antigua — St. Kitts and Nevis—Cuba—Porto Rico—Hayti or San Domingo—Demerara (British Guiana)—Martinique—Guadeloupe—Mauritius—Bourbon (Réunion) —Canada—Central America—Ecuador—Venezuela—Japan—India—Italy—Sweden—Denmark .. .. *pages* 785-856

INDEX .. .. *pages* 857-876

INTRODUCTION.

Definition and General Chemistry of Sugars.—The term "sugar" was originally employed and intended to classify all substances having a sweet flavour, and thus came to be used indiscriminately for cane-sugar, fruit-sugar, sugar (acetate) of lead, and other bodies possessing that property. At present, in a general sense, it is reserved almost exclusively to denote cane- and beet-sugar (true crystallisable sugar or "sucrose"). In chemistry, the word "sugar" is applied generically to a large class of organic bodies which, including the closely related bodies starch and cellulose, are termed "carbohydrates," since, in addition to carbon, they all contain oxygen and hydrogen in the proportion to form water. By chemical synthesis, or by derivation from natural products, sugars have been prepared containing from 2 atoms of carbon upwards, but the sugars met with commercially have each 6 or 12 atoms of carbon. They are nearly allied to, and may be considered as derivatives of, the hexatomic alcohols, of which mannite (mannitol) may be taken as a type. Indeed, mannite may be formed from glucose or levulose by treatment with sodium amalgam, the glucose thereby taking up 2 atoms more of hydrogen, and becoming converted into mannite:—

$$\underset{\text{Glucose.}}{C_6H_{12}O_6} + 2\,H = \underset{\text{Mannite.}}{C_6H_{14}O_6}.$$

Although the hexatomic alcohols are not to be regarded as true sugars, still, as each of them possesses a marked saccharine flavour, and presents some of the other character-

istics of the true sugars, it will be convenient and instructive to include them in the subjoined tabular classification :—

	CARBOHYDRATES.	
Saturated Hexatomic Alcohols. $C_6H_{14}O_6$.	Monosaccharides or Glucoses. $C_6H_{12}O_6$.	Disaccharides. $C_{12}H_{22}O_{11}$.
Mannitol (mannite).	Dextrose, glucose, grape-sugar, starch-sugar, starch-glucose, diabetic sugar.	Cane-sugar, saccharobiose, crystallisable sugar, sucrose.
Sorbitol (sorbite).	Levulose, levo-glucose, fructose, honey-sugar, fruit-sugar.	Milk-sugar, lactobiose, lactose, lactin.
Dulcitol (dulcite).	Galactose.	Maltose, maltobiose, malt-sugar, starch-sugar, ptyalose.
Isodulcitol (isodulcite).	Mannose.	Isomaltose, gallisin.
	Sorbinose.	Trehalose, mycose.
		Melibiose, raffinobiose.

The trisaccharide, Raffinose, melitriose or gossypose, $C_{18}H_{32}O_{16}$, which when crystallised contains 5 molecules of water of crystallisation.

The properties by which the members of these groups may be distinguished are mainly :—(1) By boiling with dilute acids the hexatomic alcohols and the glucoses are but little affected, while the saccharoses and raffinose are converted into glucoses ; (2) the varying powers possessed by many of their solutions in rotating the vibration plane of a ray of polarised light ; (3) the power which the glucoses possess of reducing a boiling alkaline solution of copper sulphate to cuprous oxide ; (4) the tendency of the glucoses to enter into fermentation, while the hexatomic alcohols are unfermentable, and the disaccharides are either unfermentable, or only partially fermentable and with great difficulty ; most of the last, however, are converted into glucoses by the action of ferments, some of which as diastase (a principle formed during the germination of seeds) and synaptase (a principle found in almonds and other fruit kernels) have special effects. The disaccharides are also converted into glucoses by the saliva, and by the juices of the stomach and intestines ; and some,

as cane-sugar, merely by prolonged heating or boiling in water. Certain other ferments, as the yeasts and moulds, possess the property of converting some disaccharides into glucoses before promoting the special fermentations produced by their propagation. The fermentable sugars ($C_6H_{12}O_6$) which are capable of direct vinous fermentation are invert sugar (a mixture of dextrose and levulose), dextrose, levulose, galactose, and maltose.

The members of the first group (hexatomic alcohols) demand no further consideration here. The most important commercially is mannite.

Cane-sugar, or sucrose, is the variety of sugar which is extracted from the sugar-cane, a plant which grows only in tropical and sub-tropical climates, and which at one time supplied nearly the whole of the sugar consumed in Europe. It is extensively cultivated, and the manufactured product, under the name of "raw sugar," forms the staple produce of many of our colonies. Until recently, both the cultivation and manufacture of this most important article have been much neglected, and even at the present day some of the largest sugar-producing countries are exporting sugar, which, from its appearance and characteristics, has evidently been sadly spoiled during preparation. Sucrose is also extracted from the juice of the beetroot; it is apparently identical in chemical composition with the sugar extracted from the cane, and very large quantities are produced for consumption in Europe, but in its raw or imperfectly refined condition, owing to the different character of its impurities, it possesses inferior sweetening powers to cane-sugar. More care is taken in the manufacture of sucrose from beet than from cane. Sucrose is likewise contained in the juices of many other plants, notably sorghum and several palms; its manufacture is, however, virtually restricted to the sugar-cane in the tropics, beetroot in Europe, sorghum and sugar-maple in America, and a small proportion from the wild date-palm in the East.

Sucrose is found associated with invert sugar in the juice of many fruits; the following table by Payen shows the percentage proportions :—

	Cane-sugar.	Total Sugars.
Pineapple (Montserrat)	11·33	13·30
Strawberry (Collina d'Erherdt)	6·33	11·31
Apricot	6·04	8·78
Apple, grey Reinette (fresh)	5·28	14·00
,, ,, (preserved)	3·20	15·83
,, English	2·19	7·65
Calville (preserved)	0·43	6·25
Plum, Mirabelle	5·24	8·67
,, Reine Claude	1·23	5·55
Lemon	0·41	1·47
Orange	4·22	8·58
Raspberry	2·01	7·23
Peach	0·92	1·99
Pear	0·68	8·78
,, St. Germaine (preserved)	0·36	7·84

Sucrose separates from a supersaturated solution in anhydrous crystals in the form of monoclinic prisms, generally with hemihedral faces; its specific gravity is 1·606; it is very soluble in warm water, but insoluble in ether and cold absolute alcohol; absolute alcohol when warm takes up a small proportion, which is again deposited on cooling. Heated to 160° C. (320° F.) it melts, and solidifies again on cooling, forming "barley-sugar." At higher temperatures than this it suffers decomposition, losing water, and becoming converted into a mixture of dextrose and levulosan; and at still higher temperatures it is converted into caramel. Its concentrated solution may be kept exposed to the atmosphere for some considerable time without suffering any sensible amount of deterioration; in weaker solutions, however, the sucrose is gradually transformed into invert sugar, more especially if the sugar be at all impure, in which case it is very prone to undergo fermentation from the organisms present in it. Long-continued heating converts it into invert sugar, this change being more rapidly brought about in the presence of an acid; when treated with concentrated sulphuric acid it is

transformed (with evolution of sulphurous acid and other volatile products) into a black carbonaceous mass. With bases, it forms a class of salts known as sucrates; the alkali earths combine with it, and its optical power is reduced, not, however, proportionally to the quantity of the base, but to the concentration of the sugar solution. Its specific rotatory power varies slightly with the concentration and also with the temperature. The value of $[\alpha]_D$ for 20° C. and the normal weight (26·048 grm. per 100 Mohr's c.c.) may be taken as + 66·5°. Various salts have the power of preventing sucrose from crystallising.

Sodium chloride forms with it a compound having the formula $C_{12}H_{22}O_{11}$, NaCl, $2H_2O$. Concentrated sugar solutions dissolve a large proportion of lime, forming thereby compounds containing one, two or three equivalents of lime, which are readily decomposed by carbonic acid gas. The calcium sucrates formed by treating concentrated solutions of sucrose with calcium hydroxide are four in number. As several methods have been proposed for manufacturing or refining sugar by the aid of these compounds, they may be shortly described. The monobasic sucrate ($C_{12}H_{22}O_{11}CaO$), prepared by precipitating a saturated solution of sugar containing excess of lime with 85 per cent. alcohol, forms a white precipitate which, on drying, constitutes a brittle substance easily soluble in water. The dibasic sucrate ($C_{12}H_{22}O_{11}2CaO$) has been obtained by Boivin and Loiseau by several methods; it is easily prepared by precipitating with 65 per cent. alcohol a saturated solution of sucrose with excess of lime, and boiling; it is decomposed by water into the tribasic salt and sugar. Sesquibasic sucrate ($2C_{12}H_{22}O_{11}3CaO$) is formed by boiling a solution of sugar with excess of lime. The compound separates out, and may be obtained as a white friable mass by evaporating in an atmosphere free from carbonic acid. Tribasic sucrate ($C_{12}H_{22}O_{11}3CaO$) is precipitated in flocks resembling albumen when a sugar solution containing

excess of lime is heated; it is readily soluble in sugar solution. The formation of the peculiar sucro-carbonate of lime, the "sucrate of hydrocarbonate of lime" of Boivin and Loiseau, will be fully described under Sugar-refining. The chemical composition, which, however, varies with the density of the solutions, temperature, and proportions of sugar and lime, is $3CaCO_3$, $C_{12}H_{22}O_{11}$, $3CaO2H_2O$.

Sucrose is not directly fermentable, but first requires inverting. When its solution is mixed with yeast it gradually becomes converted into invert sugar, owing to the action of invertin, a zymase contained in yeast, and subsequently, by fermentation, into alcohol and carbonic acid,

$$C_6H_{12}O_6 = 2\,C_2H_6O + 2\,CO_2.$$

Other compounds are also formed, as was shown by Pasteur, e.g. glycerol (glycerine) and succinic acid, amounting to nearly 5 per cent., so that the proportion of alcohol produced is only 51–51·5 per cent., instead of 54·97, the theoretical quantity. The action of the yeast is not thoroughly understood. Mineral acids greatly retard fermentation, even sulphurous acid. It is also prevented by carbolic acid.

Invert sugar ($C_6H_{12}O_6$) can be produced from crystallisable sugar by the action of acids, invertase, diastase, heat, salts, etc. It is easily fermentable, forms salts with metallic bases, is found in the juices of many plants, and is present in very large proportion in the juice of unripe sugar-cane; it is manufactured from sucrose by treatment with a mineral acid (*see* Saccharum); it renders nearly its own weight of sucrose uncrystallisable; with alkalies, it darkens in colour and forms soluble salts with them; it reduces an alkaline solution of a cupric salt; when concentrated it forms a syrup, the colour of which depends on its purity and the care used in its preparation, but if the syrup be fairly pure, it soon sets to a paste or hard solid, owing to the crystallisation of the dextrose. It is composed of equal parts of two bodies, namely, dextrose, or

dextro-glucose and levulose, or levo-glucose; these differ in rotatory power, and in other particulars; levulose is, however, seldom met with in a separate state, except as a pharmaceutical preparation for the use of diabetic patients.

Dextrose ($C_6H_{12}O_6$ or $C_6H_{12}O_6H_2O$) may be obtained in the anhydrous form as needle-shaped crystals by the evaporation of an alcoholic solution. It rotates a ray of polarised light to the right, and shows multirotation, i.e. a freshly prepared solution polarises about double the normal amount. This extra rotatory power sinks on standing for some time, quickly on heating, and immediately on adding a 0·1 solution of ammonia, to the normal, and remains constant. Its rotation is dependent on the concentration, but independent of the temperature. For the normal weight $[a]_D$ for 20° C. is 53°·324. It is insoluble in ether, soluble in alcohol, and gives no coloration when mixed with concentrated sulphuric acid; with alkalies, on the application of heat, it turns brown; it reduces an alkaline solution of a cupric salt, and forms with metallic bases compounds called glucosates; when heated to 170° C. (338° F.), it gives off one atom of water and contains glucosan ($C_6H_{10}O_5$); by increasing the temperature it turns brown, and is subsequently converted into caramel.

Levulose is isomeric with dextrose, but rotates a ray of polarised light to the left; its molecular rotatory power varies with the concentration, and is greatly influenced by the temperature. For temperatures between 9° and 45° C. König and Jesser give the following formula—

$$[a]_D^t = -107^\circ\cdot65 + 0\cdot692\,t$$

hence, for the normal weight at 20° C. we have $[a]_D = -93\cdot81$. It usually forms a colourless syrup, and is generally described as uncrystallisable, but it may be obtained in very hard crystals of prismatic or pyramidal form belonging to the rhombic system. On the application of heat, it behaves in much the same way as dextro-glucose. It may be prepared

by inverting cane sugar with hydrochloric acid, cooling to nearly 0° C., neutralising with lime, and filtering. On standing, the calcium levulosate crystallises out in silky needles. After washing with ice-cold water, it is decomposed with oxalic acid to remove the lime. On careful concentration of the levulose solution a pale yellow syrup is obtained, from which the levulose may be obtained in crystals. Levulose may also be prepared from inulin contained in dahlia bulbs, by treatment with acid and neutralising.

Raffinose ($C_{18}H_{32}O_{16}$) when crystallised contains five molecules of water of crystallisation, and is the only trisaccharide that need be considered here. It is pretty widely extended in the vegetable kingdom; eucalyptus manna contains 2–3 per cent., cotton-seed cake about 3 per cent., and the sugar beet about 0·02 per cent. From the latter it finds its way into beet sugar and molasses; molasses from the strontium de-sugarising process may contain as much as 16 per cent., and thus affords a good source for its preparation. It is separated from the molasses by methyl alcohol, in which raffinose is readily soluble. Crystallised raffinose forms long, spiky, shining, transparent needles of the monoclinic system, generally united in warty crusts. The presence of raffinose often causes cane-sugar to crystallise in spiky crystals, such sugar being known as molasses sugar. It is less soluble in cold water than cane-sugar, but dissolves more freely in hot water than the latter. It is insoluble in absolute alcohol and ether, but dissolves to the extent of 11 per cent. in methyl alcohol. The optical rotation is independent of the concentration and of the temperature. The specific rotatory power for the hydrate is + 104·6. By very gradually heating at 80° C., and afterwards to 105° C., it loses the whole of its water, 15·15 per cent., leaving the anhydride. On quick heating, it melts below 100° and only loses the last of its water of crystallisation at 125°–130° C. with decomposition. Sugar containing raffinose browns by the ordinary method of drying.

Boiling with water decomposes raffinose less readily than cane-sugar. It does not reduce Fehling solution until hydrolysed. Alkalies only attack it slowly. Gentle hydrolysis splits off first levulose, leaving melibiose, and on continued hydrolysis this gives dextrose and galactose. Bottom yeast ferments raffinose completely, both before and after inversion; top yeast only ferments the levulose from raffinose, but ferments hydrolysed raffinose completely. Hydrolysed raffinose turns the polarised ray to the right. While a solution of cane-sugar, which polarises + 100 shows, after inversion − 32·66, a solution of 16·575 grm. of raffinose in 100 c.c. (Mohr's) which polarises + 100 before hydrolysis, shows +51·24 after hydrolysis. Raffinose forms compounds with calcium, strontium, and lead.

Milk-sugar, lactose, or lactine ($C_{12}H_{22}O_{11}$), an isomer of cane-sugar, is prepared from milk, which contains about 4 per cent., in the manner described hereafter; the product thus obtained may be further purified by passing its aqueous solution over animal charcoal, evaporating off the water and crystallising. Milk-sugar crystallises in hemihedral trimetric prisms, of the composition ($C_{12}H_{22}O_{11}H_2O$); by heating to 130° C. (266° F.), the crystals melt and lose one molecule of water; the anhydrous milk-sugar which remains in the form of a liquid mass, solidifies into small crystals on cooling. Milk-sugar dissolves readily in weak acetic acid, and crystallises again unaltered; it is insoluble in absolute alcohol and ether, soluble in 5–6 parts of cold and 2·5 parts of boiling water. A saturated solution in water has a density of 1·055, and contains 14·55 per cent. of crystallised milk-sugar; when concentrated, this solution deposits crystals as soon as it has attained a density of 1·062; it then contains 21·64 per cent. of milk-sugar. This change in the solubility is accounted for by Hesse on the supposition that the size of the molecules of the two modifications of milk-sugar stand to one another as 3 to 2, so that by boiling the β variety is produced. The

specific rotatory for the α variety is $[\alpha]_D = +80°$ and for the β variety $+52°\cdot53$. Milk-sugar is charred by warm concentrated sulphuric acid; heated with the diluted acid its optical rotatory power is increased, dextrose and galactose being formed. Both these sugars are fermentable, but differ in their solubility in alcohol, and in their specific rotatory power, though both are dextro-rotatory. Galactose shows multi-rotation. Its constant specific rotatory power is—

$$[\alpha]_D^{20°} = +81\cdot562$$

Milk-sugar ferments with yeast, but more slowly than dextrose, yielding alcohol and carbonic acid; with most of the bases it forms well-defined compounds; it does not combine with sodium chloride. There are two calcium compounds of it, one soluble and containing equal molecules of lime and sugar, the other insoluble and containing a large proportion of lime.

Maltose, according to O'Sullivan, is a crystalline body, yielding 50 per cent. of its weight of alcohol when fermented with yeast. It is formed by the action of malt-extract on starch; its specific rotatory power is twice that of cane-sugar, being $+138\cdot04$, and it shows semi-rotation. 100 parts correspond to $77\cdot32$ of cupric oxide, being equal to 65 parts of invert sugar. By boiling with dilute acids, it is converted wholly into dextrose.

History of Sugar.—Etymologically, sugar would seem to be of Indian origin, the earliest forms of the word being *sarkara* in Sanscrit, and *sakkara* in Pracrit. Thence it may be traced through all the Aryan languages, as *schakar* in Persian, *sukkar* in Arabic, *suicar* in Assyrian and Phœnician, *saccharum* in Latin, *azucar* in Spanish and Portuguese, *zucchero* in Italian, *sucre* in French, *zucker* in German, etc.

The precise product indicated by these various names is not always clear, and probably is not identical in all cases. The cultivation of the genuine sugar cane (*Saccharum* spp.)

appears to have been common in India and China in very remote times, but there is no documentary evidence on this point earlier than Herodotus. Frequent mention of the "sweet cane" occurs in the Scriptures, but the plant referred to is doubtful. An Indian reed yielding honey is alluded to by Strabo, and a similar statement concerning an Egyptian reed is made by Theophrastus; while Dioscorides actually gives the name *saccharum* to a kind of honey obtained from reeds in Arabia Felix and India; both he and Pliny accurately describe the product as being white and brittle, and of a salt-like consistence. Later it seems to have been generally termed "Indian Salt" among the Greeks and Romans, by whom it was obtained in small quantities at great cost from India, and used medicinally.

The introduction of the sugar-cane into the Mediterranean basin must have taken place at an early date; for it was found growing at Assouan, on the Nile, in 766, and was carried into Spain by the Moors in 714, while Sicily engaged in the culture about 1060–90. During the religious wars of the middle ages, the "sweet honied reeds" called *zucra*, which abounded in the meadows about Tripoli, were consumed by the Crusaders; and it is evident that sugar-making in that neighbourhood was conducted in a wholesale and systematic manner. From Cyprus and Madeira, the industry extended in 1500–1600 to most of the West Indies, where it was carried on by the Spanish and British colonists; but there is strong evidence in favour of the supposition that several kinds of sugar-cane are indigenous both to the West Indies and to almost the whole continent of South America.

From the extensive growth of sugar in the Western Tropics, there ensued large importations of the raw article into Europe; and the introduction of tea and coffee about the same time created a general and wide demand for what had hitherto been regarded as a medicine rather than as a nutritive article of diet. Sugar-refining appears to have been copied from the Arabs by the Venetians, and refineries were

established in England and Germany in the sixteenth century, and in Holland soon after.

Up to this time, cane-sugar was the only kind known in commerce, but in 1747, Margraf demonstrated the existence of about 6 per cent. of sugar in the beetroot; and in 1795 Achard manufactured beet-sugar on his farm in Silesia, and presented loaves of refined sugar to Frederick William III. of Prussia, in 1799. About ten years later, Napoleon used extraordinary efforts to foster the production of native-grown sugar; and grapes, plums, maize, sorghum, carrots and other plants were experimented on. The results obtained did not excel those from beet; and the first French factory for making beet-sugar was founded at Lille in 1810, by Crespel-Delisse. The sudden and great fall in the price of sugar caused by the Peace of 1815 crippled the native industry; but Crespel-Delisse and a few others held on, and the production of beet-sugar in France rose, through many vicissitudes, from 1 million kilogrammes (1000 tons) in 1827 to 450 million in 1875, and is still increasing.

The artificial conversion of starch into the form of sugar known as glucose was first accomplished by Kirchoff, of St. Petersburg, in 1702. Of late years, this industry has assumed important dimensions in Continental Europe, England, and the United States.

As to the history of the other sugars obtained from the maple, sorghum, and various palms, nothing definite is known. The preparation of sugar or syrup from green maize stalks is due to the ancient Mexicans, and has been carried on with varying success in Southern Europe and in the United States; the extraction of sugar from melons is a recent American innovation; and the separation of sugar from milk is an essentially Swiss industry. The saccharine secretion of bees and similar insects, as well as natural exudations, such as manna, have probably been utilised from the very remotest ages, and are the subject of no particular preparation or manipulation.

The further history of the development of the sugar industry, now one of the most important, particularly for this country and our many colonies, may be gathered from the succeeding pages, notably from the chapter giving a summary of the important patents relating to it, and from the chapter on Production and Commerce.

Literature of Sugar.—The literature bearing upon sugar is extensive, and embraces the following works:—

ABRAHAM (K.)
"Die Dampfwirtschaft in der Zuckerfabrik." (*Magdeburg:* 1904.)

ALLEN (A. H.)
"Commercial Organic Analysis," vol. i., article "Sugars." (*London:* 1898.)

ANDERSON (A. W.)
"Sugar-Cane, and Manufacture of Sugar in the West Indies." (*Trinidad:* 1860.)

ANDERSON (W.)
"The Aba-el-Wakf Sugar Factory, Upper Egypt." (Min. Proc. Inst. Civ. Eng., vol. xxxv. *London:* 1872.)

ANTELME (C.)
"Culture de la canne à sucre à l'île Maurice." (*Bordeaux:* 1866.)

AULARD (A.)
"Etude comparée des différents procédés de raffinage en raffinerie et en sucrerie." (*Paris:* 1901.)

BARBET (E.)
"Analyse des liquides sucrés." (*Paris:* 1879.)

BARUCHSON (A.)
"Beetroot Sugar." (*London:* 2nd edit., 1870.)

BASS (W. L).
"Cane-juice Defecation."
"Cane Sugar."

BASSET (N.)
"Culture de la betterave." (*Paris:* 3rd edit., 1868.)
"La situation de l'industrie sucrière française." (*Paris:* 1873.)
"La Sucrerie." (*Paris.*)
"Guide du fabricant de sucre." (*Paris:* 2nd edit., 1872–5.)
"Guide du planteur de cannes." (*Paris:* 1889.)

BEAUDET, PELLET ET SAILLARD.
"Traité de la fabrication du sucre de betterave et de canne." (*Paris:* 1894.)

BELL (J.)
"Culture of the Sugar-cane, and Distillation of Rum." (*Calcutta:* 1831.)

BENOIT (J. A.)
"Culture spéculative de la betterave." (*Troyes:* 1874.)

BERSCH (W.)
"Die Fabrikation von Stärkezucker, Dextrin, Maltosepräparaten, Zuckercouleur und Invertzucker." (*Vienna:* 1901.)

BESSEMER (H.)
"New System of Manufacturing Sugar." (*London:* 1852.)

BLAKE (J. S.)
"Prize Essay on Draining Sugar Estates."

BLONDEL (J.)
"Fabrication du sucre de betteraves." (*Douai:* 2nd edit., 1870.)

BOBIERRE (A.)
"Culture de la canne à sucre." (*Paris:* 1865.)

BOURGOIN D'ORLI (P. H. F.)
"Culture de la canne à sucre." (*Paris.*)

BOUTON (L. S.)
"Espèces de cannes à sucre cultivées à Maurice." (*Port Louis:* 1863.)

BOVELL (J. R.), D'ALBUQUERQUE (J. P.) and MORRIS (Sir D.)
"Lectures to Sugar Planters." (*London:* 1906.)

BRIEM (H.).
"Die Zuckerrübe."
"Die praktische Rübenbaü."

BROWNE (C. A.) and R. E. BLOUIN.
"The Chemistry of the Sugar Cane, and its Products in Louisiana." (*Baton-Rouge:* 1907.)

BURGH (N. P.)
"Sugar Machinery." (*London:* 1863)
"Manufacture of Sugar, and Machinery Employed." (Journ. Soc. Arts, vol. xiv., No. 698. *London:* 1866.)

CAMBIER (TH.)
"La combustible en sucrerie." (*Paris:* 1892.)

CAMERON.
"Sugar: its Composition, etc." (*Dublin:* 1863.)

CLAASSEN (H.)
"Die Zuckerfabrikation." (*Magdeburg:* 1904.
"Beet Sugar Manufacture." (English Translation.) (*London and New York:* 1906.)

CLAASSEN (H.) UND BARTZ (W.)
"Die Zuckerindustrie." (*Leipsic:* 1905)

COLLIER (P.)
"Sorghum : its culture and manufacture, economically considered as a source of sugar, syrup, and fodder." (*Cincinnati:* 1884.)

COMMERSON (E.) ET LANGIER (E.)
"Guide pour l'analyse des matières sucrées." (*Paris:* 1884.)

DEBARBIERI (R.)
"Coltivazione della barbabietola da zucchero." (*Milan:* 1889.)

DEERR (N.)
"Sugar and the Sugar Cane." (*Altrincham, Manchester:* 1905.)
"Sugar House Notes." (*London:* 1900.)

DEJONCHE (G.)
"Cours de technologie sucrière (sucrerie)." (*Paris:* 1907.)

DOCTE (A. LE).
"Traité complet du controle chimique de la fabrication du sucre." (*Paris:* 1883.)

DOERINA (E.)
"Die Zuckerrübe und ihr Anbau."

DUNCAN (J.), and J. A. R. and B. E. R. NEWLANDS.
"The Alum Process for Purifying Sugar." (*London:* 1875.)

EISBEIN (C. J.)
"Die kleinen Feinde des Zuckerrübenbaues."

ERNOTTE (J.)
"Les économies de combustible en sucrerie." (*Brussels:* 1899.)

FACCANI (A.)
"La Fabbricazione dello zucchero di barbabietola." (*Milan:* 1901.)

FOSTER (J.)
"Evaporation by Multiple System." (*Sunderland:* 1890.)

FRADISS, SIDERSKY, ET AULARD.
"Emploi de l'acide sulfureux dans l'industrie sucrière." (*Paris:* 1889.)

FRANKEL (J.) and R. A. HUTTER.
"Starch, Glucose, Starch-sugar, and Dextrine." (*Philadelphia and London:* 1881.)

FRÜHLING (R.) and J. SCHULZE.
"Anleitung zur Untersuchung der für die Zuckerindustrie in Betracht kommenden Rohmaterialien, Produkte, Nebenprodukte und Hilfssubstanzen." (*Brunswick:* 6th edit., 1903.)

GALLOIS ET DUPONT.
"Manuel-Agenda des fabricants de sucre et des distillateurs."
Now issued as "Memento du Chemiste," HALLER et GIRARD. (*Paris:* 1907.

GILL (C. H.)
"Manufacture and Refining of Sugar." (Cantor Lecture, Soc. Arts.) (*London:* 1872.)

GONNERMANN (M.)
"Tabellen für den täglichen Gebrauch im Laboratorium der Zuckerfabriken." (*Magdeburg:* 1901.)

HARLAND (R. H.)
"Manufacture of Sugar from the Sugar Cane." (The 'Analyst,' *London:* 1880.)

HEAD (J.)
"Combustion of Refuse Vegetable Substances under Steam Boilers." (Min. Inst. Civ. Engs., Jan. 1877.)

HEDGES (J. A.)
"Sorgo, or the Northern Sugar-plant." (*Cincinnati:* 1863.)

HERIOT (T. H. P.)
"Science in Sugar Production." (*Altrincham:* 1907.)

HERRMANN (P.)
"Verlustbestimmung und chemische Betriebscontrolle der Zuckerfabrikation." (1905.)

HERZFELD (A.)
"Experimental-Untersuchungen auf dem Gebiete der Zuckerfabrikation." (*Berlin:* 1904.)

HIGGINS (B.)
"Muscovado Sugar and Rum." (*St. Jago de la Vega:* 1800.)

HODECK (VON Z.)
"25 Jahre (1876–1901) des Vereines der Zuckerindustrie in Böhmen." (*Prague:* 1901.)

HOLRUNG (M.)
"Die Rübenmelasse im Dienste der deutschen Landwirtschaft." (*Halle:* 1895.)

HORSIN-DEON (P.)
"Traité théorique et pratique de la fabrication du sucre." (*Paris:* 2nd edit., 1900.)

HUTCHESON (J. M.)
"Notes on the Sugar Industry of the United Kingdom." (*Greenock:* 1901.)

ICERY (E.)
"Recherches sur le jus de la Canne à Sucre." (*Mauritius:* 1865.)

INGRAM (W.)
"Sorghum Cultivation at Belvoir." (*London:* 1880.

IODIDI (S. L.)
"Fuel Economy in Sugar Factories." (*Chicago.*)

JAENSCH (T.)
"Der Zucker in seiner Bedentung für die Volksernährung." (*Berlin:* 1900.)

JELINEK (H.)
"Ueber Verdampfapparate und Verdampfstationen der Zuckerfabrikation." (*Prague:* 1886.)

KARLIK (H.)
"Die praktische Zuckerfabrikation." Part I. (*Prague:* 1903.)

KERR (T.)
"Cultivation of the Sugar-cane, and Manufacture of Sugar." (*London:* 1851.)

KLEEMANN (C.)
"Praktische Zuckerrübenbau." (*Leipzig:* 1881.)

KOHN (F.)
"Methods of Extracting Sugar from Beetroot and Cane." (Jour. Soc. Arts, vol. xix., No. 956. *London:* 1871.)

KRUGER (W.)
"Das Zuckerrohr und seine Kultur." (*Magdeburg:* 1899.)

LADUREAU (A.)
"Culture de la betterave à sucre." (*Lille:* 1877, 1880.)

LANDOLT (H.)
"Das optische Drehungsvermögen organischer Substanzen und dessen praktische Anwendungen." (*Brunswick:* 2nd edit., 1898.)

LEDOUX (A. R.)
"The Sugar-beet of North Carolina." (*Chapel Hill, N.C.:* 1878.)

LEDUC (W. G.)
"Sorghum Sugar." (*Washington:* 1880.)

LEGIER (E.)
"Manuel de fabrication du sucre" (*Paris:* 1901.)
"Histoire des origines de la fabrication du sucre en France." (*Paris:* 1901.)
"La Martinique et la Guadeloupe." (*Paris:* 1905.)

LENGLEN (C.)
"Culture de la betterave." (*Arras:* 1876.)

LEON (J. A.)
"Sugar Cultivation in Louisiana." (*London:* 1848.)
"Manufacturing and Refining Sugar." (*London:* 1850.)

LEPAIRE (L.)
"Culture de la betterave." (*Chalon-sur-Saône:* 1881.)

LEPLAY (H.)
"Suppression de la mélasse par l'osmose perfectionnée." (*Paris:* 1887.)

LIPPMANN (E. O. VON)
"Die Chemie der Zuckerarten." (*Brunswick:* 3rd edit., 1904.)
"Geschichte des Zuckers." (*Leipzig:* 1890.)
"Die Entwickelung der deutschen Zuckerindustrie von 1850–1900." (*Leipzig:* 1900.)

LIVERSIDGE (A.)
"Report on the Sugar-cane Disease in the Mary River district, Queensland."

MADINIER (P.) and G. DE LACOSTE.
"Guide du cultivateur du Sorgho à sucre." (*Paris:* 1856.)

MALAVOIS.
"Culture de la canne, et fabrication du sucre, à l'île de la Réunion." (*Paris:* 1861.)

MAQUENNE.
"Les sucres et leurs principaux dérivés." (*Paris:* 1900.)

MÄRCKER (M.) UND A. MORGEN.
"Wesen und Verwertung der getrockneten Diffusionsrückstände der Zuckerfabriken." (*Berlin:* 1891.)

MASSONNEAU.
"Betterave à sucre, sa culture et ses produits." (*Poissy:* 1875.)

MAUMENÉ (E. J.)
"Fabrication du sucre." (*Paris:* 1876–8.)

MAW (G.)
"The Sugar-maple."
(Pharm. Jour., vol. ix. [xxxviii.], No. 428. *London:* 1878.)

MCCULLOCH (R. S.), and A. D. BACHE.
"Scientific Investigations on Sugar and Hydrometers."
(U.S. Senate Doc., No. 209, and [revised ed.] No. 50. *Washington:* 1848.)

MCINTOSH (J. G.)
"The Technology of Sugar." (*London:* 1903.)

MCMURTRIE (W.)
"Culture of the Sugar Beet and the Manufacture of Sugar therefrom in France and the United States." (1880.)

MEYER (P.)
"25 Jahre ohne Knochenkohle." (*Brunswick:* 1906.)

MITTELSTAEDT (O.)
"Die neueren Forschungen auf dem Gebiete der Chemie der Zuckerarten." (*Magdeburg:* 1898.)

MOIGNO (L'ABBÉ)
"Saccharimétrie optique, chimique et mélassimétrique." (*Paris:* 1869.)

MORSE (I. H.)
"Calculations used in Cane Sugar Factories." (*New York* and *London:* 1904.)

MOTT (H. A.)
"Practical Determination of the Value of the Sugars of Commerce." (Jour. Franklin Inst.)
"Absorption of Sugar by Bone-black." (Jour. Franklin Inst.)

MÜLLER (F.)
"Tierische Zuckerrübenschädlinge." (*Berlin:* 1893.)

MYRICK.
"The American Sugar Industry." (*New York:* 1899.)

NICCOL (R.)
"Sugar and Sugar-refining." (*Greenock:* 1864.)

NICHOLSON (W. G.)
"Prize Essay on Empoldering Land for Sugar Estates."

NURSEY (P. F.)
"Sugar-making Machinery." (Trans. Soc. Eng. *London:* 1866.)

OLCOTT (H. S.)
"Sorgo and Imphæ, the Chinese and African Sugar-canes." (*New York:* 1857.)

OTTO (J. G.)
"Om Druesukkerets Fremstilling og Titrering ved Knapp's Vœdske." (1882.)

PAASCHE (H.)
"Die Zuckerproduktion der Welt." (*Leipzig:* 1905.)

PAYEN (M.)
"Mémoire sur la structure et la composition de la canne à sucre." (*Paris:* 1849.)

PÉLIGOT (E.)
"Fabrication du sucre." (*Paris:* 1843.)

PELLET (H.)
"Nouveau procédé simple, rapide et peu couteux de dosage direct du sucre contenu dans la betterave, la canne, la bagasse, le sorgho, etc." (*Paris:* 1888.)
"Dosage du sucre crystallisable dans la betterave." (*Paris:* 1893.)

PETERMANN (A.)
"Culture de la betterave à sucre." (*Brussels:* 1876.)

PHIPSON (T. L.)
"Agricultural Chemistry of the Sugar-Cane." (*London:* 1873.)

PORTER (G. R.)
"The Sugar-Cane." (*London:* 2nd edit., 1843.)

PREUSS (E.)
"Leitfaden für Zuckerfabrikchemiker." (*Berlin:* 1892.)

PRINSEN-GEERLIGS (H. C.)
"Cane Sugar and the Process of its Manufacture in Java." (*Altrincham:* 2nd edit., 1902.)
"Methods of Chemical Control in Cane Sugar Factories." (*Altrincham:* 1905.)

REBOUX.
"Notes pratiques de sucrerie." (*Paris:* .)

REED (W.)
"History of Sugar and Sugar-yielding Plants, and Epitome of Processes of Manufacture." (*London:* 1866.)

REGNER (R. VON).
"Die Fabrikation des Rübenzuckers." (*Vienna, Leipzig, and Pesth.*)

REHWALD (F.)
"Stärke-fabrikation, und Fabrikation des Traubenzuckers." (*Vienna, Leipzig, and Pesth.*)

REYNOSO (A.)
"El ensayo sobre el cultivo de la caña de azucar." (*Paris:* 1865.)

ROBINSON (S. H.)
"The Bengal Sugar Planter." (*Calcutta:* 1849.)

ROLFE (G. W.)
"The Polariscope in the Chemical Laboratory." (*London:* 1906.)

RONNBERG (G.)
"Sucrerie. Détails de fabrication." (: 1893.)

ROTH (H. L.)
"The Sugar Industry in Queensland." (*Brisbane, Sydney, Melbourne, and London:* 1880.)
"Guide to the Literature of Sugar." (*London:* 1890.)

ROUGHLEY (T.)
"Jamaica Planter's Guide." (*London:* 1823.)

RÜMKER (K. VON).
"Die Zuckerrübenzüchtung der Gegenwart." (*Berlin:* 1891.)

RÜMPLER (A.)
"Die Nichtzuckerstoffe der Rüben." (*Brunswick:* 1898.)
"Ausführliches Handbuch der Zuckerfabrikation." (*Brunswick:* 1907.)

SACHS (F.)
"Revue universelle des progrès de la fabrication du sucre." (*Gembloux:* 1888.)

ST. CROIX (Marquis de).
"Fabrication du sucre aux colonies françaises." (*Paris:* 1843.)

SCHAR.
"Das Zuckerrohr, seine Heimat, Kultur und Geschichte." (*Zurich:* 1890.)

SCHEIBLER (C.)
"Die Gehaltsermittelung der Zuckerlösungen durch Bestimmung des spezifischen Gewichtes derselben bei der Temperatur von + 15° C." (*Berlin:* 1891.)
"Rübenzucker-fabrikation." (In A. W. Hofmann's "Chemische Industrie," iii. Heft.) (*Brunswick:* 1877.)

SCHOMBURGH.
"History of Barbadoes." (1848.)

SCOFFERN (J.)
"Manufacture of Sugar in the Colonies and at Home." (*London:* 1849.)
"The Sorghum Saccharatum (Sugar-grass)." (1859.)

SHIER (J.)
"Testing Cane Juice, and the Process of Clarification." (*London:* 1877.)

SIDERSKY (D.)
"Traité d'analyse des matières sucrées." (*Paris:* 1890.)

SILLIMAN (B.)
"Cultivation of the Sugar-Cane." (*Washington:* 1833.)

SIMMONDS (P. L.)
"Tropical Agriculture." (*London:* 1877.)

SLASKI AND WASILKOWSKI.
"Tabellen für Zuckerchemiker." (*Kieff:* 3rd edit., 1905.)

SOAMES (P.)
"Manufacture of Sugar from the Sugar-Cane." (*London:* 1872.)

SOLTWEDEL (F.)
"Formen und Farben von Saccharum officinarum (Zuckerrohr) und von verwandten Arten." (*Berlin:* .)

SPENCER (G. L.)
"Handbook for Cane-Sugar Manufacturers and their Chemists." (*New York:* 1906.)
"Handbook for Chemists of Beet Sugar Houses and Seed Culture Farms." (*New York:* 1897.)

STAMMER (K.)
"Lehrbuch der Zuckerfabrikation." (*Brunswick:* 2nd edit., 1887.)
"Der Damf in der Zuckerfabrik." (*Magdeburg:* 1891–4.)
"Taschenbuch-Kalender für Zucker-fabrikanten." (*Berlin:* 1908.)

STEWART (F. L.)
"Sugar made from Maize and Sorghum." (*Washington:* 1878.)

STEYDN (E.)
"Die Fabrikation des Rübenzuckers." (*Vienna:* 1893.)
"Die Untersuchung des Zuckers." (*Vienna:* 1893.)

STIFT (A.)
"Die Krankheiten der Zuckerrübe." (*Vienna:* 1900.)
"Die Krankheiten und tierischen Feinde der Zuckerrübe." (*Vienna:* 1900.)
"Leitfaden für Zuckerfabrikchemiker." (*Vienna:* 1900.)

STOHMANN (F.)
"Handbuch der Zuckerfabrikation." (*Berlin:* 4th edit., 1899.)

STOLLE (F.)
"Handbuch für Zuckerfabrikchemiker." (*Berlin:* 1904.)

STROHMER (F.)
"Der Zucker als Nährstoff." (*Vienna:* 1899.)

STUTZER (A.)
"Zucker und Alkohol." (*Berlin:* 1902.)

SULLIVAN (W. K.)
"Prospects of Beet-Sugar in Ireland." (*Dublin:* 1852.)

SZYFER (L.)
"Podrecznik do roz biorów chemicznych" (Polish). (Handbook of Chemical Analysis for Sugar Manufacturers.)

TIEMANN (W.)
"The Sugar Cane in Egypt." (*Altrincham:* 1903.)

TOLLENS (B.)
"Kurzes Handbuch der Kohlehydrate." (*Breslau:* 1888–95.)

TUCKER (J. H.)
"Manual of Sugar Analysis." (*New York:* 1881.)

TURNER (A.)
"Das Problem der Kristallisation." (*Leipzig:* 1897.)

VANHA and STOCKLASA.
"Die Rüben-Nematoden." (*Berlin:* 1896.)

VOELCKER (A.)
"Cultivation and Uses of Sugar-Beet in England." (Jour. Soc. Arts, vol. xix. No. 955. *London:* 1871.)
"On Beetroot Pulp." (*London:* 1870.)
"Sugar Lands of Queensland." (*London:* 1874.)

VRANCKEN (E.)
"Manuel de la Fabrication du Sucre de Betterave." (*Brussels:* 1904.)

WALKHOFF (L.)
"Fabrication et raffinage du sucre de betteraves." (*Paris* and *Kiev:* 1870–1.)

WALLIS TAYLER (A. J.)
"Sugar Machinery." (*London:* 1908.)

WARE (L. S.)
"The Sugar Beet." (*Philadelphia*: 1880.)
"A Study of the Various Sources of Sugar." (*Philadelphia*: 1881.)
"Cattle-feeding with Sugar Beets, Sugar, Molasses and Sugar Beet Residuum." (*Philadelphia*: 1902.)
"Beet-Sugar Manufacture and Refining." (*New York*: 1905–7.)

WEIN (E.)
"Tabellen zur quantitativen Bestimmung der Zuckerarten." (*Stuttgart*: 1888.)

WEISS (F. J.)
"Kondensation." (*Berlin*: 1901.)

WIENER (M.)
"A magyar czukoripár fejlödése." (The development of the Hungarian Sugar Industry.) (*Buda-Pesth*: 1902.)

WILEY (H. W.)
"The Northern Sugar Industry in 1883." (*Washington*: 1884.)
"Diffusion: its Application to Sugar-Cane, and Record of Experiments with Sorghum in 1883." (*Washington*: 1884.)
"The Sugar Industry of the United States." (*Washington*: 1885.)
"Extraction of Sugar from Sugar-Cane and Sorghum." (*Washington*: 1886.)
"The Sugar Beet." (*Washington*: 1899.)
"Influence of Environment on the Composition of the Sugar Beet, 1904." (*Washington*: 1905.)

WILHELMY (L.)
"Ueber das Gesetz, nach welchem die Einwirkung der Säuren auf den Rohrzucker stattfindet." (*Leipzig*: 1891.)

WINDISCH (C.)
"Tafel zur Ermittelung des Zuckergehaltes wässeriger Zuckerlösungen aus der Dichte bei 15° C. (*Berlin*: 1896.)

WOY (R.)
"Tabelle zur Bestimmung der Zuckerarten durch Reduktion Fehling'scher Lösung nach Kjeldahl für Kupferoxyd als Wägungsform berechnet." (*Weimar*: 1897.)

WRAY (L.)
"The Practical Sugar-planter." (*London*: 1848.)

JOURNALS.

The International Sugar Journal (formerly the Sugar Cane). (*Manchester*: 1869– .)
The Sugar Beet. (*Philadelphia*.)
The Louisiana Planter. (*New Orleans*.)
The Hawaian Planter's Monthly. (*Honolulu*.)

Sugar Journal and Tropical Cultivator. (*Mackay, Queensland.*)
Bulletin de l'Association des Chimistes de Sucrerie et de Distillerie. (*Paris:* 1882– .)
La Sucrerie Indigène et Coloniale. (*Paris.*)
Journal des Fabricants de Sucre. (*Paris:* 1866– .)
La Sucrerie Belge. (*Brussels.*)
Zeitschrift des Vereins der Deutschen Zucker-Industrie. (*Berlin:* 1851– .)
Zeitschrift, Oesterr.-Ungar., für Zuckerindustrie und Landwirtschaft.
Zeitschrift für Zuckerindustrie in Böhmen. (*Prague:* 1876– .)
Archief voor de Java-Suikerindustrie. (*Soerabaya, Java.*)
American Sugar Industry and Beet Sugar Gazette. (*Chicago.*)
Centralblatt für die Zuckerindustrie. (*Magdeburg.*)
West Indian Bulletin. (*London: West India Committee.*)
Agricultural News. (*London: West Indian Committee.*)
Sugar Planter's Journal. (*New Orleans.*)
Queenslander.
La Betterave. (*Valenciennes, Nord.*)
Wochenschrift des Centralvereines für Rübenzuckerindustrie. (*Vienna.*)

SUGAR

A HANDBOOK FOR PLANTERS AND REFINERS

CANE SUGAR

CHAPTER I.

CULTIVATION OF THE PLANT.

The Plant.—The sugar-cane is a kind of gigantic grass, belonging to the genus *Saccharum*, though its external appearance would hardly lead the casual observer to this conclusion. Most botanists are inclined to ascribe all the varied sorts of sugar-cane now grown to a single species, called *Saccharum officinarum*, formerly *Arundo saccharifera*; this theory supposes all the forms which are at present met with to be merely varieties induced by the effects of cultivation. The best authorities are not absolutely agreed upon the subject, however; and as it is very questionable whether any of the canes now growing in an apparently wild state in some of the oldest sugar-raising countries are truly wild, i.e. have never been subjected to artificial influences, it is probably impossible to arrive at a reliable decision, especially since the original home of the sugar-cane remains unknown.

Varieties.—All practical ends are served by a knowledge of the characteristics which have been developed in the different varieties by cultivation. Many of these have been raised to the level of distinct species, and have had botanical

names conferred upon them; but in view of the lack of evidence as to their being true species and not mere artificial varieties, and to avoid unnecessary complication, it will be sufficient here to give the colloquial names by which they are generally known to sugar planters, and their native names.

1. The Bourbon cane appears to have been introduced into the West Indies from the Island of Bourbon, but it came originally from the Malabar Coast, where it was found growing spontaneously as a small-sized, but soft and juicy cane; but it was so much affected by the change of climate and soil, and the cultivation it received in Bourbon, and so increased in size, and richness of juice, that it was planted in preference to the old kind, and at length entirely superseded it throughout the island. Wray, to whom we are indebted for a good deal of information on this subject, entertains a suspicion that it is in reality no other than the Tibboo Leeut of Singapore (generally called the Otaheite cane), somewhat altered by change of soil and climate.

2. The Otaheite canes are two: the yellow or straw-coloured, and the purple-striped or ribbon. The former and the Bourbon are so much alike in all respects, and have become so intermixed on West Indian estates, that it is a matter of great difficulty to discover points of difference between them.

Considered as the same, one description will serve for both. With a good soil and favourable season, plants of the first year's growth often attain the height of 12 or 14 feet, measuring 6 inches in circumference, and with joints 8 or 9 inches apart, though this exceeds the average. Such plant canes commonly yield (in Jamaica, Bengal, and the Straits Settlements), 2½ tons, and not unfrequently 3 tons, of marketable sugar and molasses per acre. Planted at proper seasons, as will be treated of hereafter, they attain maturity in from 10 to 12 months. Under certain circumstances, as in excessively rich land, or a wet season, it may be expedient to allow them even 14 months. They require a generous soil and attentive

management. Many soils which suit other varieties are unfit for the proper development of these; whilst it is generally remarked, that they are more sensible of the injuries committed by the trespassing of cattle, sheep, etc., during their early growth, than other descriptions.

The Purple-striped Otaheite cane is very much like the ribbon cane of Batavia in appearance; but the former has broad purple stripes on a greenish-yellow ground, whereas the latter is of a blood-red on a transparent straw-coloured ground. It is often called the Otaheite Ribbon cane, in contradistinction to the ribbon cane of Batavia. Its foliage is of a much darker colour than that of the yellow variety, whilst its leaves droop much less. It is a hardy and esteemed description, of large size, soft and juicy; and yields sugar in equal quantity, though of a rather dark quality.

3. Batavian canes are of four descriptions, viz. the Yellow-violet, the Purple-violet or Java cane, the Transparent or Ribbon cane, and the Tibboo Batavee or Batavian cane of the Straits Settlements.

The so-called Yellow-violet cane differs from the Bourbon in being smaller, less juicy, considerably harder, of slower growth, of much darker foliage, and more erect. When ripe, it is usually of a straw-colour, its skin or rind is thick, and the pith is hard; but its juice is rich and abundant. The Yellow-violet contents itself with a soil of inferior quality, and this renders it of much importance in planting out large tracts of land. The sugar manufactured from this cane is of a very fine quality, but considerably less in quantity than from the Bourbon. A very common custom of the old Jamaican planter was to mix the Yellow-violet with the Bourbon plant cane, in certain proportions, for the purpose of rectifying the juice of the latter, under the impression that burning would be prevented.

The Purple-violet, or large black cane, or Cheribon cane of Java, is fully as thick as the Otaheite, with joints varying

from 3 to 7 inches apart. In height it is usually about 8 or 10 feet, with leaves of a lighter green than the Yellow-violet. The uppermost joints sometimes exhibit faint streaks, becoming imperceptible in the lower joints, which are of the darkest purple colour. Very frequently a white resinous film is seen encrusted on the joints of this cane, sometimes lying so thick that the purple of the cane itself is in some joints almost hidden. When in perfection, it yields a very sweet and rich juice. Being quite hard, it is difficult to grind, and affords a comparatively small quantity of juice, which is sometimes troublesome to treat. It is very hardy, thriving well in poor dry soils; in Jamaica, it is often planted in the outer rows of the cane fields, to stand the brunt of trespassing cattle. To other descriptions of cane, these ravages would be very serious indeed; but the purple-violet is so hardy that it quickly recovers, and springs up again with astonishing rapidity. It was introduced into the West Indies about the same time as the Bourbon, and is still much cultivated. In the Straits, the Malays term it Tibboo Etam, or black cane, and grow it around their houses, for eating.

The Transparent or Ribbon cane is much smaller than the Otaheite Ribbon cane; is of a bright transparent yellow, with a number of blood-red streaks or stripes running the whole length of the stalk, and varying in breadth from ¼ to 1 inch. Its leaves are green, similar to those of the Yellow-violet, but more erect. It grows from 6 to 10 feet high, with joints from 4 to 8 inches apart, and 4 inches in circumference. It is generally planted in light sandy soils, where no other cane will thrive, and sometimes it is raised promiscuously with the Yellow-violet. Although its rind is thick, and its general texture is hard, yet it yields a good quantity of juice of excellent quality, which is easily converted into fair sugar. Planters often grind this cane with the Bourbon, for the reason applying to the Yellow-violet.

The Tibboo Batavee or Batavian Cane is common in the

district near the Straits of Malacca, where it is cultivated by the Malays. In appearance, it is much like the Yellow-violet, except in the peculiarity of its colour, which is rather greenish with a pink shade in parts; in some of the lower joints this pink colour is very bright and pretty, whilst in the upper it is more faint and delicate. The joints are seldom more than from 3 to 6 inches apart. In height, size, and foliage, it closely resembles the Yellow-violet, but differs from it in being much softer, more juicy, and less hardy in habit. In a rich soil, it is prolific, and ratoons well; its juice is rich, clarifies easily, and gives a fine sugar; but, on the whole, it is inferior to the Otaheite variety, yet requires an equally rich soil.

4. East Indian canes. The large red canes of Assam are very juicy and sweet; the sugar produced from them is of an exceedingly fine grain and good colour; they are, moreover, strong in growth, and much less apt to fall over than the Otaheite, to which they are fully equal in size, as well as in quantity and quality of juice. They flower when only 8 months old, and consequently can be cut and manufactured in 10 months from the day of being planted.

In lower Bengal (near Calcutta), and in the Straits of Malacca, a large red cane abounds, which bears a very close resemblance to the preceding variety.

The Red cane of Bengal is a large and fine cane, much used about Calcutta for sugar manufacture; sugar made from it by the natives, in their own rough and primitive way, exhibits a grain of good size and brilliancy. The Malay name is Tibboo Merah.

The next large canes are the Black and the Yellow Nepal, large-sized and fine-looking canes, fully equal in appearance to the Assam.

The following three sorts of native canes are most cultivated in India: the Kajlee, or Purple-coloured cane; the Pooree, or Light-coloured cane; and the Kulloor, or White

cane. The first-named grows on dry land in Bengal, the second requires a richer soil, and the third grows best in swampy ground, which does not suit the other kinds. This last is the most generally cultivated.

Dr. Buchanan mentions four kinds common to Mysore. The Restali, which produces the native sugar of Mysore, can be planted only in the last two weeks of March and the two first of April; it completes its growth in 12 months, and does not survive for a second crop. The Pattaputti, which produces the best Bella or Jaggery; it can be planted at the same season as the Restali, as also at the end of July and beginning of August; it takes 14 months to complete its growth; but the stools produce a second crop, like the ratoons of the West Indies, which ripen in 12 months. The Maracabo and Cuttayacabo are very small, seldom exceeding half an inch in diameter; yet in some districts of Mysore, as about Colár, the last-named is usually cultivated, because it requires less water than the larger sorts. All these are inferior to our Colonial kinds.

5. The Chinese sugar-cane possesses the advantage of being so hard and solid as to resist the forceps of the white ant and the teeth of the jackal—two great enemies to the East Indian sugar plantations. It is difficult to express the juice with the Bengal native sugar mill; but the cane bears drought much better than the sorts in general cultivation, producing a profitable crop even to the third year, while the common cane of India must be annually renewed. It is extremely hard and prolific; during very hot seasons it remains uninjured in every respect, whilst other canes are all either burnt up, or eaten out of the ground by the white ants. As the rain comes on, the China cane springs up wonderfully, many roots having no less than 30 shoots, which, by September, become fine canes, about 12 feet in height, 3 inches in circumference, and with joints from 6 to 8 inches apart. These, cut in October, may be planted out during a tolerably

severe winter, the cold having little or no effect in checking their growth. These facts are sufficient to establish the China cane as a variety well suited to India, although it is very far inferior to the Otaheite, wherever that cane can be cultivated successfully. It was introduced into India in 1796, and is now common throughout Bengal, although the natives think it indigenous, from its having been so long amongst them. Its neglected cultivation during many years in India has caused it to degenerate very much. It is small-sized, being rarely more than 1 or 1¼ inch in diameter; but it is sweet, and makes fair sugar. The Chinese assert that it is better adapted than other kinds for making sugar-candy. It must not be confounded with the Chinese cane experimented with in Demerara in 1854–5, which was *Holcus saccharatus* (Sorghum); as though it gave 3 or 4 crops in a year, the aggregate annual yield fell short of that from the common cane.

6. It has been stated that the "Elephant" cane of Cochin China attains a height of 11 feet and a diameter of 7 inches in 6 months. This variety is only cultivated for chewing, and might prove to be a good sugar-producing cane. But as varieties, especially of sugar-canes, often improve by change of climate, perhaps this might succeed better elsewhere. The diameter and height to which this variety attains, depend on the length of time during which its growth continues. In a good soil, it requires 2 years to reach 10 feet in height. After 5 or 6 years, it will reach 16 to 32 feet; such specimens may be seen near native houses, where it is allowed to grow undisturbed as an ornamental plant. In the province of Mytho, this variety is cultivated in humid alluvial soils on a considerable scale, but simply for sale in the bazaars. It has the peculiarity of possessing a very brittle epidermal layer, so that, instead of becoming pressed out, and giving up its juice, when passed through the wooden mills employed in Cochin China, it breaks up into small fragments.

7. The Straits Settlements grow eight kinds of sugar-cane, foremost among which is the Selangore, called by the Malays Tibboo Cappor or Tibboo Bittong Beraboo, and often termed "the Chinese cane" by the planters of Province Wellesley, from the simple fact of its having been cultivated there by the Chinese immigrants since a time long antecedent to the European occupation of the district. This is one of the finest canes known, attaining, under favourable conditions, a weight of 25 lb., a length of over 13 feet, and a diameter of 3 inches. It is remarkable for the prevalence of setæ ("cane itch") on the portion of the leaf attached to the stalk. The leaves are very broad, deeply serrated, and have a considerable droop; they are some shades darker-coloured than the Otaheite, and adhere so firmly to the stem, even when dry, as to require taking off by hand. The cane ratoons better than any other kind in the Straits, and has been known to yield there 40 piculs (a picul is 133⅓ lb.) of granulated undrained sugar on 1 orlong of ground (an orlong is 1⅓ acre) as third ratoons. As plant-canes, they have given an average of 65 piculs of granulated sugar from each orlong, or 6500 lb. to the acre, sometimes increasing to 7200 lb. The Selangore cane grows firm and strong, remaining much more erect than the Otaheite; it affords an abundance of juice, which is sweet, easy of clarification, boils well, and produces a very fair sugar.

The Selangore cane has been introduced into Brazil, and the British and French West Indies. In the first-named it has been attacked by disease; but in the two latter, it is well spoken of, growing with great vigour under irrigation. Planted pretty wide apart (2 yards by 2 yards), and properly manured, in 5 or 6 months it forms such a thick vigorous growth as to keep down weeds, thus greatly reducing the labour usually expended on their eradication. The clumps yield from 25 to 40 canes, thus producing a weight per acre much in excess of ordinary canes. As many as 16 clumps have been

cut from 40 square yards, giving a net weight of over 800 lb. or at the rate of more than 80,000 lb. to the acre, while the ordinary canes vary from about 21,600 lb. to 32,000 lb. The "begass" of the Selangore cane constitutes so much fuel that only a small addition of straw is required to supplement it, while still leaving as much refuse on the ground as other kinds.

8. The South Pacific Islands are by some authorities regarded as the original home of the sugar-cane, and they certainly produce a number of forms which are strictly local. Cuzent enumerates the following kinds in the Society Islands. (*a*) To Uti: large stalk, of fine violet colour, pith of same hue, and rich in juice; it is cut at about 14 months. It is not indigenous, but was introduced from Batavia in 1782. (*b*) Rutu or Rurutu: stem of a clear violet, with white pith, the young leaves also violet-coloured. It comes from Cook's Archipelago. (*c*) Irimotu: large, green, fragile stem, which breaks with a straight fracture and no splinters, the pith being white; it is rich in juice, but is little cultivated, because of the pubescence (hairiness) of its stem, the hairs attacking both the skin and respiratory organs during the harvesting operation. (*d*) Oura: the common Ribbon cane, having a violet stem with longitudinal bands of bright yellow, the pith being white; it attains a great size, especially in humid soils. (*e*) Piavere: the Creole cane; it has a light-red stem, grows to a less size than the preceding, its internodes are less distant, its pith is white, and the juice is less rich than the other kinds, whence it is regarded as inferior. (*f*) Vaihi-uouo or Uouo: the stalk is white, and contains less juice than the average kinds, but the juice is richer in crystallisable sugar. It was introduced from the Sandwich Islands. (*g*) Avae: a yellow stalk banded with clear green, having some resemblance to the last-mentioned; the pith is white, tender, and very juicy, hence the natives chew it in preference to the others, but the sap is not very rich in crystallisable sugar. On the flanks of some of the mountains, two other varieties are met with. They are

both small, and are known collectively by the name To-Aeho; one, distinguished as To-Patu, is red, and contains more juice than the other, which is white. Canes growing in the Pacific Islands, it has been asserted, yield 25 per cent. more juice and 15 per cent. more crystallisable sugar than the bulk of the canes raised in our Colonies; but this statement requires confirmation; thus 15 per cent. more crystallisable sugar means a juice containing $2\frac{1}{3}$ to 3 lb. of crystallisable sugar per gallon, whereas even 2 lb. would be an extraordinary figure. The Otaheite or Tahiti canes cultivated in the West Indies degenerate in course of time, and should be renewed by the importation of fresh stock from the Pacific groups, and perhaps New Guinea. The Sandwich Islands are accredited with 35 to 40 distinct varieties of sugar-cane. One of these varieties, called Puolleæ, grown on 30 acres of good land under irrigation, gave an average yield per acre of 12,000 lb. (6 hhds.) of No. 16 sugar. It is reported to be hardy, and to grow freely up to 2000 feet elevation in its native country. The Guingant cane, from Tahiti, blooms in June, is of vigorous growth, and gives a fair amount of sugar.

John Horne, Director of Gardens and Forests, Mauritius, calls particular attention to the Lahina cane as a sugar yielder. He was told when in the Sandwich Islands that this cane yields as much as an average of 6 tons sugar per acre, on areas as extensive as 100 acres; and $7\frac{1}{2}$ tons per acre, on an average, over areas of 20 acres or less in extent. However, after the first ratoons it should be uprooted, as the second ratoons are nearly worthless. The variety Samuri is the favourite cane with the sugar planters in Fiji. It is hardy, grows rapidly, and yields sugar freely. While in Louisiana, Horne found that the Lahina cane, mentioned above, was under cultivation there, and was very favourably reported upon.

9. West Indian kinds. H. Prestoe, the Colonial botanist of Trinidad, describes the 14 best varieties of sugar-cane, among

32 surviving kinds of a larger number sent from Mauritius. Eighteen of them seem to be distinct varieties, and deserving of care and cultivation, as possessing characters that give them, in one way or other, a superiority over the two or three sorts at present in cultivation, and among which the Yellow Otaheite takes by far the largest place. Some of the new varieties are peculiar for length of joint, and some for length of joint united with stoutness. One is remarkable for both, added to a very soft tissue. This sort is of a fine dark-claret colour, and is numbered 10 in the list. In common with many of the others, it also bears drought well, and is prolific. Two (Nos. 13 and 14), being extremely hardy and prolific, are recommended as fodder canes, to plant on poor, dry soils, unsuited for the better canes. They are much hardier than Guinea grass, and will yield a manifold greater weight per acre of surpassingly nutritious fodder. They are purple-striped. No. 8 resembles the best Yellow Otaheite. No. 11, a dark-purple cane, perhaps a less luxuriant offshoot of same parent as No. 10, is also soft in tissue. All to No. 12 are described as stouter and more promising canes than the common Otaheite (planted in the same soil and under the same conditions), which was rarely 1½ inch in diameter. Only No. 4 was so small, Nos. 2, 6, 9, 11 and 12 being 1¾ inch, Nos. 1, 3, 5 and 7 being 2 inches, while the joints of the very handsome clean cane, No. 10, averaged 2½ inches in diameter by 6½ inches long. No. 5 has 6-inch joints, No. 9, 5½-inch, and Nos. 4, 6, 11 and 12 have 5-inch joints. Those of No. 1 are 4½ inches, of No. 3, 4 inches, and of Nos. 2 and 7, 3½ inches. No. 6 grows very straight canes. No. 7 retains a green foliage, and although short in joint, is stated to have a very fine habit. Having been grown on poor soil, the dimensions given indicate only the relative values of these varieties as compared with the Yellow Otaheite, in fields side by side, and do not define the ultimate standards to which they may attain under more favourable conditions. A richer and

moister soil will improve all. Purple and purple-striped canes are generally admitted to be preferentially adapted, by the hardihood of their habit, to the poorer drier soils; but it must be remembered that they have a strength of tissue which gives increased trouble in crushing. Nos. 10 and 11, however, are remarkable exceptions, and probably others of the list, when tried in really good soil, will assume a freer habit, and gain a larger size, than ever shown by the familiar Yellow Otaheite. There is no reason to doubt that, with selection and nursing, superior and fixed qualities can be obtained in sugar-cane, as freely as they have been in beet and other agricultural crops in Europe and America.

An esteemed cane in Mauritius is the Diard, which, it is stated, does not bloom, and is suitable to dry country.

Purdie, the Government botanist in Trinidad, has given particulars of three new varieties of sugar-cane, which are provisionally named "Caledonian Queen," "Green Selangore," and "Violet Selangore." The Caledonian Queen is a pale- or greenish-purple cane, close jointed, and extremely vigorous. The leaves are remarkably broad, and their bases are nearly destitute of the setæ or "cane-itch" common to most canes. This cane is said to attain enormous dimensions in the East, and to be one of the most sacchariferous. The short joint is a feature which is generally considered objectionable, accompanied, as it usually is, by great hardness of tissue. In this respect, however, the Caledonian Queen is an exception, and the ready way in which both the length of joint and the diameter of cane are affected by manure (the natural soil at St. Ann's being of the poorest) indicates great variability of habit, and suggests gigantic growth under the influence of rich alluvial soil.

The Green Selangore is so named from its retaining a green colour on the cane much longer than usual, although, when fully ripe, the colour of the cane is yellow, but not so bright a yellow as that of a well-ripened Otaheite. This one

is the freest-growing of all the varieties in the Botanical Gardens, except the giant Claret cane; and its erect habit is even more striking than in that sort. In respect of both length of joint and diameter of cane, it is equal to it, thus being the largest yellow cane grown in Trinidad. The foliage is large and heavy, as in Nos. 1, 2, and 6 of the former series, but completely deciduous, so that the operation of "trashing" is with it reduced to a minimum. The most striking feature in this cane, besides its size, is the broad white rim just below each joint.

The Violet Selangore has the habit of erect growth more strongly developed than is seen in any other of the canes enumerated, besides being distinctly the longest jointed and tallest, with a full average diameter. The leaves are long and narrow, as compared with the well-known Otaheite.

The remarkably erect habit of growth in these two Selangores is a character which, considering the influences most conducive to a highly saccharine juice and a large yield of sugar per acre, is of importance, and on this account, it is deemed desirable that they should be brought into notice, if only for experiment. It is generally admitted that the successful sugar cultivation of the future will mainly depend on an increased yield of sugar from a given weight of cane, just as the beetroot cultivation has become an established industry of immense importance mainly by an increased yield of sugar per ton weight of root, brought about, not only by improved tillage and manufacture, but by the propagation of roots which were found to contain most saccharine juice. One of the most commonly observed facts on a sugar-estate is that canes grown erect (and therefore enjoying full sunlight and air) are yellow, and full of sugar, whereas canes lying on or near the ground (and thus deprived of light and air by their erect companions) are green and deficient in sugar. The erect or decumbent posture of the canes is in a measure dependent on the soil, and on the kind of culture they receive,

especially when young; but, under any circumstances, a marked disposition to maintain an erect habit of growth is an obvious advantage in respect of the sugar yield. It would be highly instructive and doubtless encouraging, in the face of beetroot success, if every planter, judging himself to have a field capable of yielding 2½ or 3 hhds. per acre, were to test the saccharine contents of one of his best (most erect and yellow) canes and that of one of his worst (most decumbent and green) canes of such a field, then estimate the yield per acre by this best and this worst respectively, from the calculated weight of cane on the ground. Such a test seems to be one of the first steps towards increasing the percentage of sugar to weight of cane, and thereby the yield per acre, as has been accomplished in such a remarkable degree with the beetroot.

With regard to the several varieties of sugar-cane already introduced from the East, as well as the three varieties now newly brought into notice, there has not been, so far, any opportunity or proper means for testing their specific and individual characteristics in respect of their habit of growth, and sugar yield under extended cultivation. It is most desirable that all the more promising kinds should be fairly tested, and their individual and distinctive features determined. To do this, it is indispensable that each variety be kept and treated separately, and experience has shown that it is a mistake for one person to deal with more than one variety when experiment is determined on. However intelligent and energetic the superintendence, it is next to impossible, with the assistance usually available, to maintain or even to plant, a collection of sugar-canes of several varieties without getting them mixed. Besides, ten or twelve stools grown under fair average conditions of the estate, are all that is required to accomplish a full and satisfactory experiment. Such stools, placed not less than 8 feet apart in a single row, and kept free from other plants, will furnish reliable material for analysis, and data for estimating yield per acre.

The judicious planter will make a selection of the two or three best sorts adapted to his estate, and will not confine his attention to a single kind, however superior its qualities may be; for it has been proved by experience that the growth of one class of cane, continued for successive seasons, and extending over many years, causes a material deterioration. The occasional exchange of new varieties therefore becomes imperative, in order to secure the maximum results that the land is capable of affording.

Of the three existent cane varieties in Egypt, the red cane is deemed the best for field and factory. This red cane springs apparently from the Bourbon cane, or else is identical with it. For Egypt, it may safely be considered the most suitable kind of cane from all points of view. Mr. Walter Tiemann found this cane already the richest in sugar, and he subsequently developed it by proper treatment to a remarkable growth and yield. The Striped cane gives now and then a large return, yet is poorer in sugar content. The Yellow cane does not attain to full maturity in Egypt.

Structure and Development.—Bearing in mind the modified characteristics which cultivation has produced in the numerous varieties of sugar-cane, the following is an account of the structure and development of the plant.

A knowledge of the growth of cane roots being important to planters, the following experiments were made at Foulden Plantation, Mackay (Queensland), with a view of gaining some information on this point. The experiments were conducted by Mr. Henry Ling Roth, to whose kindness we are indebted for the following notes taken from the Proceedings of the Royal Society of New South Wales :—

"*A*. On November 20, 1882, a cask 30 inches deep, with the bottom knocked out, and 17 to 22 inches in diameter, was filled with manured garden soil well mixed down to 12 inches from the bottom, and sunk into the ground so that the top of the cask was on a level with the surrounding soil. In the

cask were planted, 4 inches deep, two Rose-bamboo plants with three good eyes in each.

"*B.* On the same date were planted a few feet distant from the above, two plants of the same variety of cane, with a like number of eyes and placed at the same depth. This plot trenched 4 feet square and 20 to 22 inches deep. The soil was a light black loam for the first 15 inches, then a heavier brown loam, which at 40 inches depth had merged into river sand. As far as has yet been ascertained, this sand extends down to beyond 6 feet. This plot was not manured.

"The cask was raised on August 16, 1883, and knocked to pieces, leaving a compact mass of roots binding the earth firmly together. The soil was removed by means of washing with water, but the roots were so fragile that in spite of every precaution many were broken off; in fact, from the quantity of rootlets collected in the water afterwards, I should say that fully one-sixth were dissevered. Fig. 1 will show the dense character of these roots. Some had spread out laterally, and not being able to extend beyond the cask had gone downwards; other roots, again, had gone down at once. As it was not imagined that any roots would have descended to a greater depth than 30 inches (the depth of the cask), no precautions were taken to prevent the sundering of any roots which penetrated below that depth. I afterwards found that almost all the roots had thrust themselves into the sand below the cask. The cane had been planted very late in the season, but had grown fairly well; the diameter of the canes reached 1½ inch, but the colour of the leaves was pale and unhealthy, having become and remained so after five months' growth, owing to the restrictions on the spreading of the roots by the cask. When taken out of the cask there appeared to be more roots than soil, and examined under the microscope, the fine root-hairs (trichomes) showed a diameter of $\frac{1}{250}$ to $\frac{1}{275}$ inch. Where the roots had come across a lump of manure they had formed a compact network.

"The roots of *B* were raised on August 20, 1883. In digging out the roots of this cane, which was grown under perfectly normal conditions, ample room was allowed for the lateral roots, which were found to spread to a distance of over

FIG. 1.—ROOTS OF SUGAR CANE.

FIG. 2.—TIPS OF SUGAR CANE ROOTS.

3½ feet. Having found these, I dug down and gradually approached nearer, until having excavated enough soil at a depth of 5 feet, I began to look for the tips of descending roots. The deepest root thus touched was a depth of 4¾ feet,

being 5 feet 1½ inch long from its departure from the cane plant to its tip in the sand (*a*, Fig. 2). Another root (*b*, Fig. 2*) was 3 feet 10½ inches long, and also grew almost perpendicularly downwards. Starting from above again, the roots on the surface were not quite so dense as those in the cask, but were very close to a depth of nearly 2 feet, below which depth they thinned considerably. The cane, although, like the other, planted late, was fairly grown, with a good healthy colour in the leaves, about 18 inches higher than the cane in the cask, and the canes from 1¾ to 1⅞ inch in diameter. In Fig. 2 the tip of the long root *a* was broken off in removal; but *b* shows the tip intact; its diameter at the broadest part was $\frac{5}{16}$ inch. *c e f* are tips of roots found at various depths (*f* as deep as *b*); *d* are the surface or upper roots, the same as shown in Fig. 1. The two root stems *a b* look very naked; in reality they were not so, but in tracing them back to the planted pieces of cane, all the branches were broken off —their points of disconnection are plainly discernible; the rootlets were exceedingly brittle towards the lower end, and I feared that by attempting too much I might lose all. No roots tipped like *a* and *e* were found except with a downward tendency, that is to say, I found no lateral roots tipped like those. This, however, does not prove that the cane has two distinct classes of roots, for, being very fragile, and being in the loam, which is not so easily disconnected as the sand, I may have missed them in consequence of the tips remaining in the soil.

"In the fields, young cane which has sprouted to only 6 to 10 inches above ground, will have fine roots going to the depth of 30 inches. All this would seem to indicate that cane, like other plants, requires plenty of room for the natural spread of its roots. Where there was plenty of food and the soil was loose enough to allow the roots to penetrate with ease,

* To obtain a thorough idea of the roots, this figure should be examined through a magnifying glass; the tip of root (*b*) would thus be seen to advantage.

there the roots were thickest; where the soil was not in that condition, or there was no great quantity of food, there the roots were thinnest.

"Prof. Liversidge states that he saw at Maryborough, in Queensland, roots of the sugar-cane extending down from 8 to 10 feet, where they had been exposed by the cutting away of a bank, and was informed by planters that they had traced roots down to a depth of even 12 to 15 feet in light alluvial soil."

In order to find out something more about the fleshy roots discovered in the foregoing experiments, and their special functions, Roth made the following further experiments:—

"On October 2, 1883, at Mackay (Queensland), after some good spring rains, when the soil was moist, warm to the touch, and otherwise in good condition, I planted two pieces of Rose Bamboo sugar-cane in two deep separate boxes.

"No. 1 was planted 3 inches deep in the soil, No. 2 7 inches deep, both at the usual angle, and otherwise in the manner commonly followed by planters. The shoot of No. 1 appeared above the ground on October 20, and that of No. 2 (the deeper planted) on October 25. As usual, in both cases the soil was slightly raised by the pushing shoot shortly before any appearance of the green above ground. On November 2, both plants were carefully taken out: the boxes were put in a large butt of water, the sides knocked off, and by gently shaking the plants the soil was got rid of. An after examination of the water and soil showed that none of the roots had been dissevered. The plants were kept in water for twenty-four hours, to enable the roots to swell, and then photographed. The accompanying illustrations (Figs. 3, 4) were carefully drawn from the photographs. The weather during the period of growth was very favourable, and I may add that during the time which elapsed from their first appearance the sky was almost cloudless.

"When taken up, the shoot of No. 1 was 18 inches long,

measuring from its point of departure from the parent cane. Besides numerous fine roots it had four fleshy roots, the

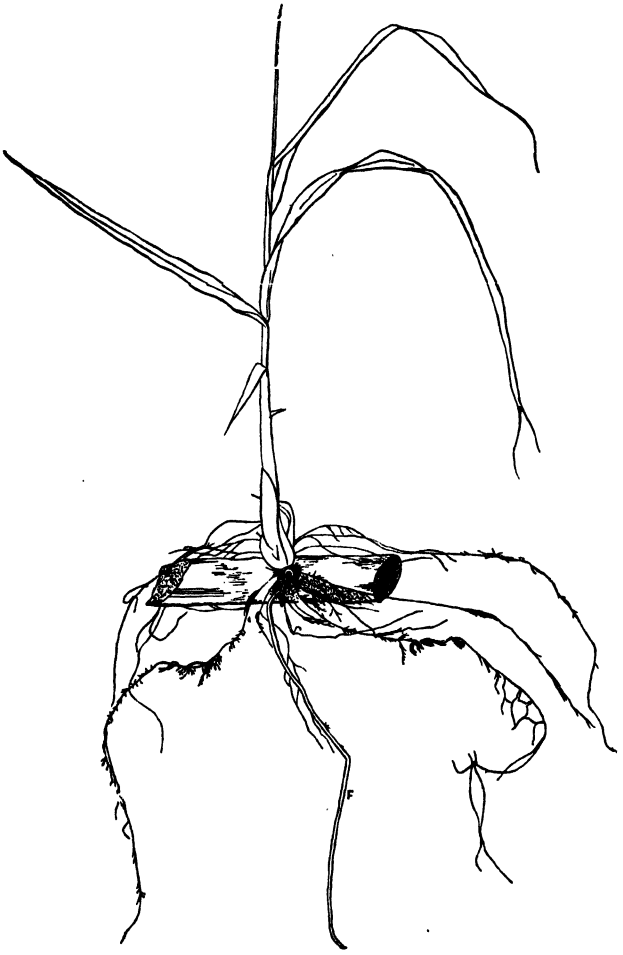

FIG. 3.—SUGAR-CANE ROOTS.

longest of which was nearly 13 inches in length, while the others were less than 2 inches long. These fleshy roots appeared to spring from the point of growth of the shoot

on the parent cane, and certainly had not come out of any of the starry points on the node.

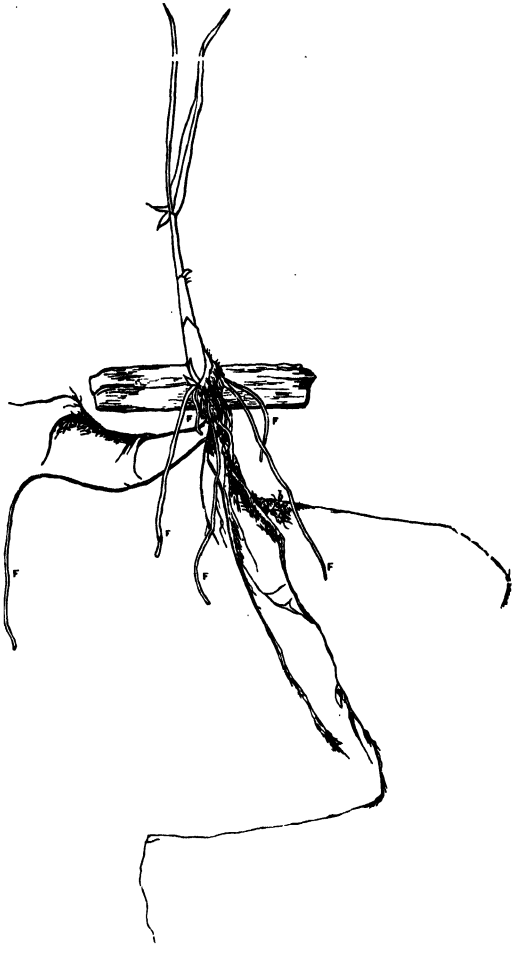

FIG. 4.—SUGAR-CANE ROOTS.

"The shoot of No. 2 was 12 inches long from its point of departure from the parent cane. This shoot was not so developed, nor were the roots quite so numerous or grown to the

same length as those of No. 1. There were, however, seven distinct fleshy roots, apparently also growing out of the bottom of the shoot; three of these averaged 6 inches in length, the others being much smaller. The fleshy roots are brittle and have a long tube running down the centre; occasionally they are pointed at the tip, at other times they are blunt. The surface is rough, and adhering grains of sand are distinctly visible without the aid of a lens.

"When these fleshy roots are found deep in the ground, that is to say when they belong to old canes, the tips only are succulent, the connecting portion being more or less shrivelled, and lateral smaller fleshy roots are thrown out at right angles at the tips. For its successful growth the cane requires a large amount of moisture, and it is very probable that these roots are thrown out at a period of its growth when the moisture contained in the parent plant is becoming exhausted. When plant-cane is put into moist soil it appears to swell, probably on account of the moisture it absorbs, and it does not shrink until the period of its function as a reservoir has ceased and decomposition sets in. On the other hand, when plant-cane is put into dry soil, the cause of the slowness of its growth (or rather the long dormant state) is due to the absorption of the moisture in the plant by the soil. Under ordinarily favourable conditions the functions of the fleshy roots would probably be to supply the plant with moisture.

"The experiments show that the root development of the cane is very great; they show also that when cane is planted deeply under ordinary circumstances, more time is necessary for the shoot to appear above ground; but that in the meanwhile the roots are not idle, for the fleshy ones, which in all probability form the mainstay of the future stool, develop very freely."

The number of joints on the stalk or cane proper varies from 40 to 60, sometimes even 80 in the Brazilian cane; but there are much fewer in the Otaheite, whose joints are farther

apart, some of the internodes or so-called "joints" being 8 or 9 inches long, while the finer specimens of Brazilian are but 2 or 3 inches in length. The joints vary very much in their dimensions; they are short or long, large or small, straight or bulging; and several of these differences are sometimes found in the same cane. The knots of the canes, seen at *a b c* in Fig. 5, are not simple enlargements, but rings, from $\frac{1}{8}$ to $\frac{1}{4}$ inch wide. Four or five rows of semi-transparent points occupy their circumference, and a circular semi-transparent line *e* very perceptibly divides the outer from the inner joint. At the upper part of this is a slight circular hollow, called the neck, which is terminated by the leaf belonging to the joint. The inner joint is entirely subordinate to the outer one in development and growth. It is destined to perform the most important function of the plant from an economic point of view, for in it the juice, after having undergone various modifications, arrives at the condition which gives it its value as a sugar-yielder. On every joint is a bud *f*, which incloses the germ of a new cane.

The sap-vessels are abundantly large, and number more than 1500. They are both simple and compound, exhibiting, when cut transversely, one, two, three, or even four openings. The function of the proper or returning vessels is to separate the peculiar juices

FIG. 5.—CANE STALK.

proper to the plant in the leaves, the rind, and the interior of the cane. At a point somewhat raised on the stalk, each sap-vessel divides into two parts, one continuing in a vertical direction, the other becoming horizontal; the latter grows interlaced with the vertical portion, and, after having formed a partition of about $\frac{1}{6}$ inch in breadth, they unite into a bundle, which pierces the rind, and forms the bud that incloses the germ of a future generation. The buds always grow alternately on the opposite sides of the joints. The partition formed by the horizontal vessels separates the joints internally, and prevents all communication between them, as far as regards the peculiar function of each. The semi-transparent ring which forms a line of demarcation between the outer and inner joint is the weakest part of the cane, and where it is most apt to break. The space left between the sap-vessels, running from one partition to another, is filled by cells, which form the symmetrical disposition of the proper vessels.

The rind of the sugar cane consists of three distinct parts: the rind properly so-called, the skin, and the epidermis. The rind is formed of sap-vessels, ranged in a parallel direction, on a compact circular surface. The skin, which is very thin, is at first white and tender; it becomes green and then yellow, as the joint approaches maturity, the period of which is shown by streaks of deep-red. The epidermis is a fine and transparent pellicle, which covers the skin. It is almost always white. At the upper part of the inner joint, the rind divides into two parts. The inner part forms the rind of the following joint. The sap-vessels of the outer part are joined by several others from the interior, with which they rise, supported by a reticulated tissue, and form the leaf, upon which the skin and epidermis of the rind are continued.

The first joint of the sugar-cane requires from 4 to 5 months for its entire growth, and, during this time, some 15 to 20 joints spring from it in succession; the same progression con-

tinues as, by degrees, each joint arrives at the period of its growth, which is ascertained by the decay of its leaf: this is the period of its maturation. When the leaves of the first 2 or 3 joints which appear out of the earth have died away, there are then about 12 or 15 leaves at the top, disposed in the form of a fan. In its natural state, the cane has at this stage acquired all its growth, and arrived at the usual period of its flowering; if it blooms, the principle of life and generation passes entirely to the development of the parts of fructification. At this time, the joints which spring forth are deprived of their bud, and the sap-vessels, with which they were supplied, pass into the leaf; whence it happens that, as the number of these vessels is constantly diminishing, the joints in a similar proportion become longer, and their rind thinner. The last joint, which is called the "arrow," is 4 or 5 feet long; it is terminated by a panicle of flowers, which are 18 or 20 inches high. If the period of flowering is delayed by cultivation, then the principle of life passes to the generation of new joints, and this continues till the sap vessels of the stole become woody, and do not afford a passage to the watery juices.

The naked fruit of the sugar-cane, as described by Kruger, forms a caryopsis, as in all seed-bearing grasses, that is, it is a dry, nut-like fruit, containing a single seed, which is united by all parts with a thin pericarp. According to Soltwedel's determinations, the fruit of the cultivated varieties weighs from 0·1 to 0·22 m.grm., and that of *Saccharum spontaneum*, which has the largest fruit, is 1·5 mm. long and 0·5 mm. broad. When unripe the fruit is milk-white, but becomes yellow or brown on ripening. Its form is an elongated egg-shape, with a projection at the tip, often forked. When sprouting it is extremely sensitive to excess or lack of moisture, and owing to the smallness of the nutrient seed it is dependent for successful growth on the richness of the soil, which also requires to be in a suitable condition as

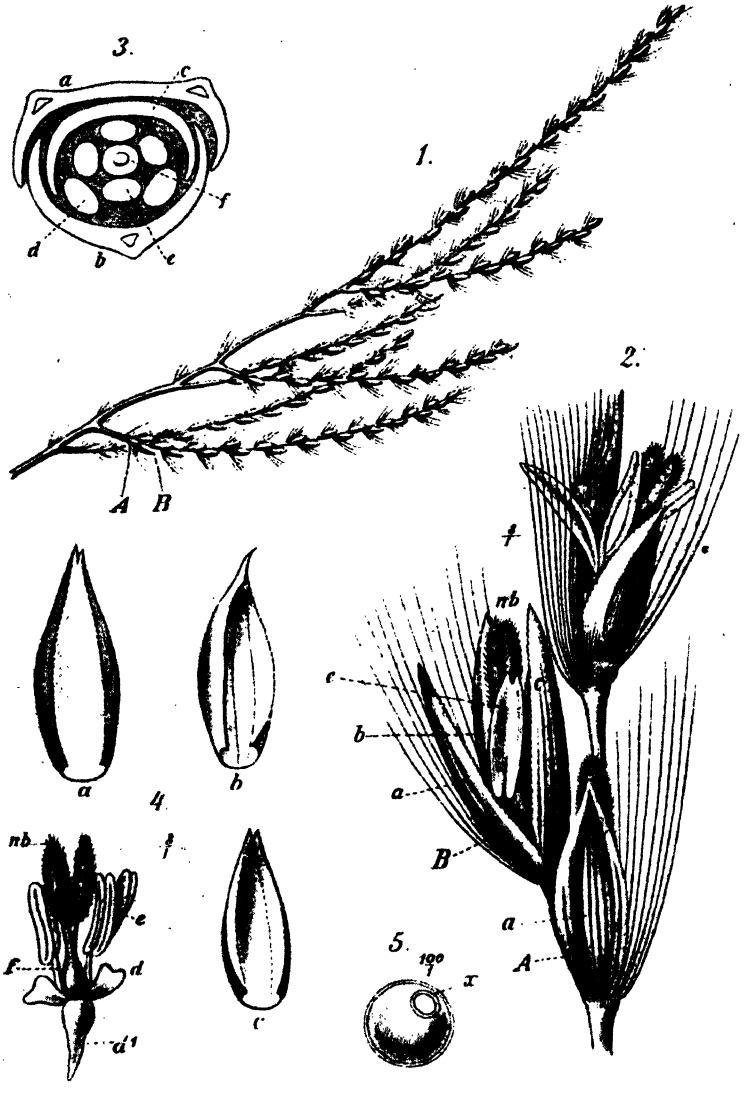

FIG. 6.—CANE FLOWER.

1. Branch of a cane panicle.
2. Part of a spike, enlarged. A, sessile, B, pedicellate spikelet; *nb*, stigma.
3. Transverse section of a floret. *a* first, *b* second, *c* third paleæ; *d* lodiculæ; *e* anthers; *f* ovary. Enlarged.
4. Parts of the developed floret partially separated. Schacht regards the anterior scale *d* also as a lodicula; this structure may, however, be regarded as a glume. Enlarged.
5. Pollen grain with pore. 100 : 1.

(All after *Schacht*.)

regards openness, moisture, warmth, aeration, and access of light.

An excellent idea of the perfect plant may be gained from the frontispiece, which shows a plantation of black Tanna canes.

Range.—The sugar-cane has a wide range, succeeding in almost all tropical and sub-tropical countries, and reaching an elevation above the sea-level amounting to 4000 feet in the South Pacific, and 5000 to 6000 feet in Mexico and South America. It is cultivated in many parts of the level country in India and China as far as 30° or 31° N. lat. Its exact geographical range may be more conveniently studied from the chapter dealing with the production, commerce, and local details of each cane-sugar growing country.

Climate.—Climate has a very pronounced effect upon the commercial value of all plants whose secretion-products are utilised. The sugar-cane thrives to the greatest perfection in a warm moist climate, with moderate intervals of hot, dry weather, tempered by refreshing sea-breezes. Its most luxuriant development is always to be observed on islands and sea-coasts, leading to the supposition that the saline particles conveyed to it by the winds are congenial to its taste; but perhaps a more weighty reason for the exuberance of the plant in such situations is to be found in the moisture which accompanies the sea-breezes, even in the hottest and driest weather. The cane attains its greatest perfection within the tropics; cold in any degree opposes its growth and development, hence it cannot be successfully cultivated in Europe, except in a very limited portion of Spain. Even in Louisiana, the frost often sets in before the planters can gather the crop, and so affects the cane-juice that it can no longer be induced to crystallise, unless the canes can be cut and crushed before a thaw occurs. Frost will also cause canes to burst.

This singular change in the nature of the juice is occasioned by the fluid contents, the saccharine and the nitro-

genised principles, of the various cells or organs bursting their bounds, and becoming intermingled the one with the other. While the frost continues, the low temperature prevents the possibility of fermentation setting in; but should a thaw intervene, the temperature of the air is raised sufficiently high to permit viscous fermentation taking place, which will altogether prevent the crystallisation of the juice when subsequently concentrated. If the thaw or period of comparatively warm weather has sufficient duration, this viscous fermentation continues until the sugar contained in the juice is destroyed. This will occur to the juice of the yet uncut cane; but it also happens to expressed juice under other circumstances. Juice which has become affected in this manner cannot be made into crystallisable sugar, and is valuable only for distillation. In the upper districts of India, also, frost frequently does great harm to the cane crops.

It is obvious, therefore, that the sugar-cane is essentially a tropical plant, requiring the strong light and great heat which can only be found in the tropics. But these conditions alone are not sufficient for successful cane-culture. Rain at the proper season is equally necessary, though it may be to a great extent replaced by a proper system of irrigation; on the other hand, rain at the wrong season, i. e. when the canes are maturing, if in great quantity, may do much mischief. As the canes are approaching maturity, two or three months of hot and fairly dry weather are exceedingly beneficial, bringing the juice to the highest degree of sweetness, and assuring a large yield of fine sugar; but slight showers at long intervals serve to maintain the vigour of the plant without appreciably weakening the juice. In the case of renewed vegetation being caused by rains after a drought, if it occurs in a locality where frost is not to be feared, it will sometimes be advantageous to leave the canes on the ground much later than usual, as the juice will gradually become richer than it can be immediately after the rain.

On the other hand, should an alternation of sunshine and rain, which for the space of five or six months has induced a luxuriant vegetation, be followed by a long-continued drought, the growth of the plants and ratoons will be prematurely checked, and they will often, under these circumstances, show a disposition to arrow. Should they now be cut, the juice will probably be found of good quality, and easily made into sugar, the only attendant evil being its deficiency in quantity, owing to the small size which the canes have attained. In such cases, it might be thought advisable to cut the canes, rather than permit them to remain on the soil; but such a course is often impracticable, for the estate is not yet prepared for it, and even if it were, the planter would not be justified in thus running the great risk of a change in the weather at a season when long experience has taught him to expect it, and thereby jeopardise the whole year's labour, for with a return of rain, vegetation would immediately revive, and then the evil of having juice poor in saccharine matter would be added to that of unusually small canes.

When a drought sets in only a short time before the season for commencing to reap the crop, that is, after the canes have attained their ordinary growth, the effect is eminently beneficial, for it really causes an inspissation of the saccharine contents of the cells by the evaporation of their water. Cane-juice under such circumstances has a considerable density, and is often of great purity. But if the drought, at whatever age of the cane it may have commenced, should continue beyond the time necessary to produce the effects just mentioned, the leaves of the plant turn yellow, the stem assumes a red and scorched appearance, and not unfrequently splits, or becomes hollow from a contraction of its cellular structure. The canes then are said to be "burnt." The juice then obtained is greatly reduced in quantity, and its quality is considerably altered. In extreme cases it is strongly acid, but it varies much in this respect.

Soil.—The question of the suitability or unsuitability of a soil for producing a certain crop resolves itself into two distinct heads, one being the physical character of the soil, the other its chemical composition. The latter is best considered under the subject of manures, leaving the former only for discussion at the present moment. It is not too much to say that the first essential in a fertile soil is the capacity for absorbing abundance of air; at the same time, the friability or porosity of the soil must not be so excessive that no moisture is retained. Clay soils are objectionable from the former cause; sandy ones, from the latter. The decomposed granite formation so general in the Straits Settlements is always found to afford really desirable soil for sugar culture, being well fertilised by a proportion of decayed vegetable matter. In both the East and West Indies, there abounds a kind of soil called brick-mould, which is considered the most advantageous of all for sugar-planting. It is composed of a mixture of sand and clay, in such proportions that air and water can penetrate to some depth with facility, thus constituting a loam which can be hoed, dug, or ploughed with comparative ease. Much depends upon the character of the clay present, and upon the amount of vegetable matter undergoing decay. A great deal of this brick-mould soil is in the best possible physical condition for agricultural purposes. Its property of retaining moisture, even in the hottest season, is quite remarkable, while in heavy rains, the water escapes quickly wherever drains exist; thus the soil is always moist without ever being too wet. These qualities, added to the ease with which it can be broken up, and its constant power of recuperation by the action of the air, render it esteemed and sought after. But many an acre of rich heavy clay might be converted into equally valuable land by the application of sand; if sea-sand, so much the better. Deep black moulds are less suitable for cane culture, tending to produce exuberant plants, rather than a rich and plentiful juice. Some of the very best sugar

is produced on limestone soils, though they do not promise great fertility.

In the Straits Settlements, Demerara, Louisiana, and elsewhere, it often occurs that lands are strongly impregnated with saline matter, which causes the cane to grow most luxuriantly, but affects the juice (and consequently the sugar made from it) very prejudicially. In Province Wellesley, quite salt sugar has been produced in the first year from such land, and the soil of the Sunderbunds proved to be so very salt that the sugar estates had to be abandoned. In Demerara, also, infinite trouble and loss result from the same cause.

Where salt is present in the land, as from the overflowing of the tides, nothing can be done but making bunds to keep out the salt water, and establishing a good system of drainage. By these means, and by keeping the soil well turned up, the excess of saline matter will in a crop or two be carried off by the rains; also, in part, by the quantity taken away in the cane or other crop grown on the land. Of course, this will only be the case where the soil is not of so sandy and porous a nature as to admit of the salt or saltish water soaking up through it during spring tides. When once the cane has imbibed these undesirable salts, they become incorporated in its juice, and cause much trouble and expense in the manufacture of the sugar. The only course to be pursued with such land is, after bunding and draining it properly, to plant Indian corn, Guinea corn, or Guinea grass on it for 2 or 3 years, until the saline matters have become in a degree exhausted; then canes may be planted without fear.

The remedies for the physical defects of soils are thorough tillage and perfect drainage, without which heavy crops are an impossibility.

Tillage.—The question of tilling the soil is one which every cultivator is bound to study; and in a branch of agriculture which demands an enormous amount of labour carried on under conditions where labour is costly and

rendered unusually arduous by a tropical climate, every contrivance which will facilitate the working of the soil and thus reduce the number of hands required on that score, should be welcomed by the cane-grower.

In the great development of steam agricultural machinery which has taken place, the needs of Colonial growers have not been neglected, and excellent machinery is in the market for dealing with the heavy soils usually found on sugar-cane estates.

Fallows and tillage may be considered together, as there is very little good in allowing land to lie fallow (unoccupied by any crop) without subjecting it to thorough tillage, so as to open it up, and expose it thoroughly to the action of the air. The importance of air to the soil has already (p. 30) been insisted upon. Green-soiling is probably more beneficial than merely allowing the land to lie fallow.

Manuring.—Most intimately connected with the subject of soils is that of manures or fertilisers, the whole object of manuring being to supply to the plant those chemical constituents in which the soil is deficient. The sugar-grower must never lose sight of the end for which he is growing the plant, and his efforts must be directed to the production, not of the tallest and stoutest canes, but of the greatest possible quantity of crystallisable sugar. Extended experiments on this branch of the cane-sugar industry have yet to be made; but in the beet-sugar culture, as will be described further on, prolonged trials have proved that it is by no means the finest roots which yield the most sugar.

Composition of the Canes.—To proceed logically, before commencing to discuss what cane-manures should consist of, it will be necessary to consider the composition of the canes which are to be grown, and the composition of the soils which are to grow them; having thus established what the requirements are, the next question will the best and most profitable mode of supplying the deficiency. In this connection,

Dr. T. L. Phipson, in his valuable pamphlet on the Agricultural Chemistry of the Sugar-Cane, states that the average composition of the fully developed sugar-cane is fairly represented by the following analysis :—

Water	71·04	Derived almost wholly from the air.
Sugar	18·02	
Cellulose	9·56	
Albuminous matters	0·55	
Fatty and colouring matters	0·35	
Salts soluble in water	0·12	Derived from the soil.
„ insoluble	0·16	
Silica	0·20	
	100·00	

Therefore 1000 tons of cane take up from the soil rather less than 5 tons of mineral ingredients, and if the soil cannot supply these 5 tons in a form capable of being assimilated, a full crop of sugar cannot be raised. About 1 ton of nitrogen is required to form the albuminous matter of 1000 tons of cane. Manures deal only with the matters supplied through the soil, except in supplementing the amount of nitrogen thus provided. The nature and relative proportions of these mineral ingredients, which are derived from the soil, are ascertained by analysis of the "ash" (the residue left after complete burning) of the full-grown entire cane. Much discrepancy exists in the various analyses of cane ash that have hitherto been made, the cause of which has been proved to lie partly in the different ages of the plants dealt with, and is perhaps due, in some cases, to variety of soil, and to omitting the leaves of the cane from consideration. The following is a rough average composition of the ash of the ripe cane and its leaves :

Silica	43·0
Phosphoric acid	6·0
Sulphuric acid	8·0
Chlorine	4·5
Lime	10·0
Magnesia	6·5
Potash	18·0
Soda	2·0
Oxide of iron, manganese, and loss in analysis	2·0

It may be well to compare the subjoined analyses of the ashes of 12 different specimens, by Dr. Stenhouse:—

	Trinidad				Berbice			Demerara	Grenada	Jamaica		
	1	2	3	4	5	6	7	8	9	10	11	12
Silica ..	45·97	42·90	46·46	41·37	46·48	50·00	45·13	17·64	26·38	52·20	48·73	54·59
Phosphoric acid ..	3·76	7·99	8·23	4·59	8·16	6·56	4·88	7·37	6·20	13·04	2·90	8·00
Sulphuric acid ..	6·66	10·94	4·65	10·93	7·52	6·40	7·74	7·97	6·08	3·31	5·35	1·94
Lime.. ..	9·16	13·20	8·91	9·11	5·78	5·09	4·49	2·34	5·87	10·64	11·62	14·36
Magnesia..	3·66	9·88	4·50	6·92	15·61	13·01	11·90	3·93	5·48	5·63	5·61	5·30
Potash ..	25·50	12·01	10·63	15·99	11·93	13·69	16·97	32·93	31·21	10·09	7·46	11·14
Soda.. ..	..	1·39	..	..	0·57	1·33	1·64	..	..	0·80	..	..
Chloride of potassium	3·27	..	7·41	8·96	..	..	..	10·70	11·14	..	16·06	0·84
Chloride of sodium ..	2·02	1·62	9·21	2·13	3·95	3·92	7·25	17·20	7·64	4·29	2·27	3·83

The first seven were all fine canes with the leaves; No. 8 had no leaves; No. 9, but few leaves; No. 10 was in full blossom, and had been manured with pen manure; No. 11 were old ratoons, manured in the same way; No. 12 were young Mont Blanc canes, manured with pen manure, guano, and marl.

By comparing these constituents together, it will be seen that the largest figures are those of silica, potash, lime, and phosphoric acid; but sulphuric acid and magnesia appear to have their importance also, whilst chlorine and soda, though represented by comparatively small figures, are usually present as chlorides of potassium and of sodium to the extent of 4 or 5 per cent. The principal substances, therefore, required to be provided in an available state in a cane soil are potash, silica, phosphoric acid, sulphuric acid, lime, and magnesia, besides a certain amount of nitrogen beyond what the plant can secure from the atmosphere. The oxides of iron and of manganese are, perhaps, also essential.

The relative importance of each substance in particular is a difficult problem to solve. Experience shows that the composition of the ash of any plant varies considerably with the period of the year at which the plant is cut, and the parts

of the plant that are burnt for analysis; so that it is by no means an easy task to state with scientific accuracy what substances any plant takes in largest quantities from the soil. But it is a fact of the greatest interest that, for a given plant, the mineral ingredients derived from the soil are constantly found in the same relative proportions; and this law holds good for the various portions of a plant, when considered in a state of maturity, i. e. when each portion has done all the work allotted to it. Dr. Phipson is undoubtedly right in saying that the analyses of the mineral ingredients of plants burnt after they have arrived at maturity, no matter where they have been grown, must generally coincide, and can alone teach with accuracy what any plant takes from the soil. He found that the analysis of the ash of some Virginian tobacco grown in the Royal Botanical Society's Gardens in London, presented precisely the same composition as that grown in America; so that neither change of soil nor of climate had influenced the relative proportions of mineral matter and organic matter, nor those of the principal ingredients: the plant had taken from the soil of London the same materials, and in the same relative proportions, as from the soil of Virginia. But it must not be forgotten that the sugar-cane possesses a power of absorbing an abnormal quantity of salts when such are presented to it in the soil, a quantity far in excess of its needs, and to the detriment of its juice. This has been already referred to under Soil (p. 31), and is illustrated in Nos. 3, 7, 8, 9, and 11 of Dr. Stenhouse's examples (p. 34).

Composition of Cane Soils.—The next question is the composition of cane soils. In illustration of this, reference may again be best made to Dr. Phipson's analyses of two West Indian soils, one (A) from a new estate in Jamaica now under canes for the first time; the other (B) from a plantation in Demerara which has been worked for more than 15 years consecutively. A valuable lesson is to be learnt

from these analyses alone, but some others are given farther on. To the eye of the most experienced planter or chemist, there was scarcely any appreciable difference in the aspect of these two soils: the sample A was merely a clay of rather darker colour than B, but nothing in their external appearance could have indicated their widely-different composition :—

TYPES OF CANE SOILS.

	A	B
Moisture	12·25	18·72
Organic matter and combined water	15·36	6·03
Silica and insoluble silicates	48·45	68·89
Alumina	13·80	2·50
Oxide of iron	6·72	2·60
Lime	0·99	0·08
Magnesia	0·29	0·25
Potash	0·11	0·10
Soda	0·70	0·09
Phosphoric acid	0·10	0·03
Sulphuric acid	0·30	0·03
Chlorine*	0·51	trace
Oxide of manganese, carbonic acid, and loss in analysis	0·42	0·68
	100·00	100·00
Nitrogen (in organic matter)	0·31	0·05

Persons accustomed to discuss analyses of soils can easily see that A possesses everything that is requisite to grow canes for a considerable number of years, whilst B is a soil fast approaching exhaustion. Attention is called to the greater amount of organic matter (humus), nitrogen, lime, and phosphoric acid in A, and to the important fact that the quantity of lime (0·08) in B is far below that of the magnesia (0·25). This has been ascertained to be a very bad sign in cane soils, and it will be probably found to be so in soils devoted to the cultivation of almost any other plant. Indeed, it is deduced from the results of numerous analyses that the degree of exhaustion which a cane soil has undergone can to a great extent be ascertained by comparing the

* The quantity of chlorine is unusually high, which is accounted for by the proximity of a salt spring.

relative amounts of lime and magnesia yielded to analysis. Analyses of four samples from the same estate in British Guiana, taken from various portions, support this:—

	Cultivated			
	10 to 15 years		Upwards of 60 years	
Lime (per cent.)	0·43	0·64	0·11	0·40
Magnesia	0·32	0·50	0·36	0·51

These suffice to show how the lime has disappeared (from the same soil) by prolonged cultivation of the cane, whilst the magnesia has remained pretty much as it was. In fact, it is quite possible in some cases to judge very approximately of the number of years a soil has been under canes, by a careful analysis of the soil, more especially when the analysis can be compared with one made of the same soil from some uncultivated spot on the borders of the plantation.

It is stated as an axiom in cane culture, that when the quantity of lime has diminished so much by prolonged culture as to be present to the extent of only 0·1 per cent., and then amounts to no more than $\frac{1}{3}$ of the magnesia present (knowing that originally the lime was not only equal to, but higher than the magnesia), we may rest assured that the crops of cane on this soil will fall off year by year, and that the most careful system of manuring will be necessary to place it again in its former productive condition.

This is a state of things which actually exists over a very considerable portion of the cane soils of our colonies. The annexed table (p. 39) of the composition of soils from numerous plantations, analysed by Dr. Phipson, is very interesting.

R. H. Harland has published an analysis of a soil from the Camarines Sur district of Luzon, in the Philippines, where the cane grows luxuriantly often to a height of 12 feet, one stool producing 4 or 5 canes, and giving sugar of superior quality. This soil is extremely fertile, as shown by its composition:—

Silicious matter	53·39	per cent.
Alumina	13·16	,,
Oxide of iron	4·80	,,
Oxide of manganese	0·10	,,
Oxide of magnesia	0·42	,,
Potash and soda as chlorides	1·14	,,
Lime	1·60	,,
Sulphuric acid	0·09	,,
Phosphoric acid	0·25	,,
Carbonic acid	traces.	
Organic and volatile matters	25·05	,,
	100·00	
Moisture in sample before drying	6·79	,,

This does not materially differ from Dr. Phipson's sample A, except that the essential ingredients are present in still greater quantity ; hence the wonderful fertility of the district, where canes are grown for years in succession without manuring.

That soils in hot countries, especially in tropical climates, contain more organic matter than those of our latitudes is a common supposition ; but it is evident from the analyses that such is not the case with cane soils. The figures which include organic matter and combined water owe a great deal to the latter, which is driven off by heat with the organic matter. In fact, putting aside soils of a peaty nature, it is rare to meet with cane soils yielding more than from 2 to 4 per cent. of humus or vegetable mould. The loss of this organic matter has produced sterility in Java, by causing a want of porosity, of nitrogen, and of carbonic acid. Hence the danger of applying lime to these soils, much as most of them require it, since it tends to destroy the humus in a very short time. In European climates, lime is always backed up by a liberal supply of organic manure ; and this latter is even more essential in the tropics than with us.

Manures obtained from Foreign Sources.—The clays of Java and Demerara, when properly drained and worked, will yield good crops of canes without manure for at least 10 or 12

ANALYSES OF CANE SOILS.

	Demerara								Barbados		Queensland
	A	B	C	D	E	F	G	H	I	J	K
Moisture	26·00	23·00	26·70	14·12	25·00	13·88	22·64	16·00	19·00	13·00	23·10
Organic matter and combined water	5·90	5·30	8·30	6·17	8·86	32·39	7·06	7·88	9·11	10·50	12·56
Silica and silicate of alumina	61·68	64·44	58·02	68·08	57·49	46·50	68·00	68·22	65·00	60·00	41·42
Lime	0·64	0·11	0·47	0·17	0·28	0·48	0·45	0·22	0·25	0·30	0·56
Magnesia	0·50	0·36	0·50	0·37	0·36	0·30	0·31	0·30	0·30	0·47	0·26
Sulphuric acid	0·01	trace	0·01	0·16	0·04	0·04	0·20	0·12	0·03	0·03	0·04
Phosphoric acid	0·08	0·05	0·19	0·07	0·09	0·03	0·16	0·10	0·07	0·06	0·06
Potash and soda	0·11	0·10	0·12	0·54	0·26	0·24	0·30	0·10	0·10	0·16	0·20
Chlorine	trace	0·02	0·01	..	0·01	0·06	0·05	trace	trace	trace	0·02
Oxide of iron, alumina, manganese, etc.	5·08	6·62	5·68	10·32	7·61	6·08	0·83	7·06	6·14	15·48	21·78
	100·00	100·00	100·00	100·00	100·00	100·00	100·00	100·00	100·00	100·00	100·00

OBSERVATIONS.—A, B, and C are soils in adjacent plantations of the same estate. A has been in canes about five years; C for a somewhat longer period—10 to 15 years; and B for about 60 years. D and E are from adjacent estates, far distant from the former; they have been in canes 20 to 25 years. F is a new soil, now growing ferns only. It is about to be planted with canes as an experiment. This soil, when it has been dried, burns like peat. G and H are from plantations only separated 100 feet from each other by a canal. G is new soil; H has been in canes about 15 years. I and J are good average specimens of Barbados soils, and K is a sample of red clay soil from Queensland, Australia.

years. In Jamaica, the same kind of clay will yield well for about 15 years; and the red porous clay of South Australia, for 15 to 20 years. After these periods, the yields will become less and less each season; and for some years past, it has been customary to dose the soils with sulphate of ammonia and Peruvian guanos, which will usually raise the produce for the two or three seasons immediately following, but after this, their stimulating effect will cease almost completely, and the soil will be then in a worse condition than before. Generally, it is preferable to try and restore these partially exhausted soils by a rational system of culture, rather than take in new land farther from the boiling-houses.

The final conclusions of Professor Harrison, as to the action of manures on the crops of cane grown on the heavy clay land at the Botanic Gardens, British Guiana, from June 1891 to May 1902, are summed up as follows:—

"1. Nitrogen in the forms of sulphate of ammonia, nitrate of soda, raw guano, and dried blood exerted a favourable influence upon the yield of the sugar canes, and is without doubt the manurial constituent, the supply of which mainly governs the yield of the plant.

"2. When supplied in quantities capable of supplying not more than 40 lb. of nitrogen per acre, there was practically no difference in the effects of sulphate of ammonia and of nitrate of soda, but on the whole the former is, in my opinion, the preferable salt to apply. Dried blood and raw guano were inferior to each of these. In the earlier crops of the experiments, the best results were obtained by a mixture of one-third nitrate of soda and two-thirds sulphate of ammonia, but during the latter years this mixture has not proved more efficacious than either sulphate of ammonia or nitrate of soda alone.

"3. Where applied in quantities supplying more than 40 lb. of nitrogen per acre sulphate of ammonia is the best source of nitrogen for the sugar cane on the alluvial soils of British Guiana.

"4. The sugar cane made more effectual use of the nitrogen supplied by 200 lb. per acre of sulphate of ammonia and by 250 lb. of nitrate of soda than it did of that supplied in heavier dressings. On the whole, dressings of from 2 to 3 cwt. of sulphate of ammonia per acre appear to be the most certainly profitable applications of nitrogen, although at favourable seasons the use of still higher proportions may prove successful.

"5. The application of superphosphate of lime to plant canes gave increased yields when added to manurings of nitrogen and potash. But little, if any, advantage was gained by the use of phosphates with ratoon-crops, and I am of opinion that manurings with superphosphate of lime, or with other manures containing phosphates, should be restricted to plant-canes, the ratoons being manured with nitrogen only.

"6. Mineral phosphates to give increased yields must be applied to the soil in such heavy dressings as to render their use decidedly unprofitable.

"7. As far as the experiments indicate, Thomas-phosphate powder (slag phosphate) is the preferable source of phosphates for application to plant canes in lieu of superphosphate of lime.

"8. The addition of potash when applied either as sulphate of potash or as nitrate of soda has exerted little or no effect. The normal weathering of the constituents of the soil sets free for each crop potash in excess of the quantity necessary for the requirements of the plants. This holds good under the conditions existent here, where the greater proportion of the potash taken up by the plants is directly returned to the soil; but where practically the whole of the produce is removed from the land, it is probable that partial potash exhaustion may take place in the course of a few crops.

"9. The use of lime has resulted in largely increased yields. But whether or not its use will result in profitable increases depends on the price of sugar. Its action appears to have

been principally mechanical in improving the texture of the land, and it is a question of much importance whether this effect could not be obtained at a lower cost, and hence more profitable by the use of light ploughs or other cultivators.

"10. The results confirm those of previous experiments that neither the addition of phosphoric acid, of potash, nor of lime to the manures favourably affects the sugar contents of the juice of the canes. The effect of nitrogenous manurings appears to be to somewhat retard the maturation of the canes, and thus the juice of canes manured with them is, as a rule, not so rich in saccharose as is that of canes grown without manure. But this effect is far more than offset by the larger yields of produce resulting from the application of nitrogenous manures and to the fact that the increases produced by the nitrogen are principally due to the development of the stalks in length and in bulk, and not to abnormal increases in the amounts of tops and leaves or the production of new shoots to the stool. In this the effects of nitrogenous manures on the sugar cane are very similar to those on others of the Graminaceæ."

As an example of an artificial manure suitable for cane lands, the following analysis of Ohlendorff's early cane manure is given.

	Moisture	13·24
a	Ammonium sulphate	8·42
b	Organic matter	22·28
	Sand and silica	4·46
	Monocalcium phosphate	11·53
c	Equal to tricalcium phosphate rendered soluble	(15·29)
c	Reverted phosphates	3·59
	Insoluble phosphates	0·99
	Calcium sulphate	21·96
d	Alkaline salts, etc.	15·53
		100·00

a	Contains nitrogen 2·00 = ammonia	2·43
b	" " 2·06 = "	2·50
a	and *b* contain nitrogen (total) 4·06 equal to ammonia	4·93
c	Assimilable phosphates	18·88
d	Contains potash	8·34

The following is a detailed analysis of Ohlendorff's dissolved Peruvian guano, which well illustrates its complex character :—

Soluble in Cold Water.	
Moisture	9·058
Sodium chloride	1·540
a Potassium chloride	1·305
b Potassium nitrate	0·085
c Potassium sulphate	2·639
Magnesium sulphate	4·464
d Monocalcium phosphate	15·570
e Ammonium sulphate	30·341
f Organic matter	0·348
Soluble in Ammonium Citrate, sp. gr. 1·09.	
g Tricalcium phosphate	2·217
Iron peroxide	0·368
Calcium sulphate	20·235
Magnesia	0·172
h Potash	0·055
Silica	1·138
j Organic matter	2·402
Insoluble in Water and Citrate.	
Tricalcium phosphate	0·571
Iron peroxide	0·107
Magnesia	0·027
k Potash	0·024
Silica	5·329
l Organic matter	2·005
	100·000
a and *g* equal to assimilable phosphates	22·847
a, *b*, *c*, *h*, and *k*, total potash	2·367
a contains nitrogen	0·011
e ,,	6·440
f ,,	0·170
j ,,	0·636
l ,,	0·157
a, *e*, *f*, *j*, and *l* contain total nitrogen	7·414
Equal to ammonia	9·000

The following extracts are taken from a report by Prof. Harrison and Mr. Bovell to the Barbadoes House of Assembly :—

"A very important point gained by the early manuring of the cane with suitable manure, is that by so doing, the healthy

growth of the young plant, upon which the future crop so much depends, is ensured, and if a drought ensues in March, April, May, and June, it will be found that such plants will withstand its effects much better than the unmanured ones.

"Next we will consider the selection and application of the artificial manure to be given in June, July, and August. As at this period of the year the cane has well devoloped its roots, and is in a state of very active growth, we require a much more soluble and active manure than that used at an earlier period.

"The manure should contain a fair proportion of phosphates and potash, one with a larger amount of the latter being chosen if the earlier manuring has not supplied it. In selecting the manure great attention should be paid to the fineness of its particles and their intimate state of admixture, as well as to the complexity of its composition; the regular and even distribution of the manurial plant-food at this season being of the very greatest importance. Avoid the mistake of throwing the manure into the cane bunch. It is useless there, nay, even injurious, until it has been washed into the surrounding soil. The young cane roots, by the extremities of which absorption of plant-food alone takes place, are now away from the middle of the bunch, and are finding their food in the banks of the holes.

"Chemical or artificial manures must at all times be applied with the greatest care; they should, preferably, be first thoroughly mixed with two or three times their bulk of dry earth, so as to facilitate their uniform application and distribution, and should be used in comparatively small quantities, say 2 cwt. at a time. You will get a far better return by applying any good artificial manure in two dressings of 2 cwt. each, than in one of five, and you will have the additional advantage of saving some 12*s.* to 15*s.* per acre in the cost of manure. You may object that it will cost more to apply manure in two dressings than in one. I reply that in this island labour is cheaper than manure."

Manures Produced on the Estate.—So much for the manures which are derived from foreign sources: now for those which are produced on the sugar estate itself. The one object of the planter is to obtain the sugar from the cane. The cultivation of the plant is merely the end by which this object is attained: it is necessary to feed the plant in order that it may live long enough to secrete a highly saccharine juice; this done, the whole plant (excepting the small proportion of sugar yielded by it) becomes a waste product. To go a step farther, this sugar is not derived from the soil at all, but from the air. Consequently, if the whole of the waste products are returned to the field as manure, the soil, with the aid of proper tillage, should theoretically increase in richness, and produce heavier crops every year. The waste produced on a sugar estate consists of the following materials: (1) The trash, or dead leaves which are stripped from the canes during growth, as well as the tops, which are not used for planting; (2) the begass, or crushed cane from which the juice has been (more or less perfectly) extracted; (3) the feculencies collected in the clarifiers, etc.; (4) the dunder, or wash-waters, containing salts in solution and other matters. To these must be added the night-soil and dung necessarily accumulated on an estate employing many men and cattle.

First, with regard to the trash. Wray goes so far as to say that he feels quite convinced that if all the trash and begass were ploughed into the soil while yet in a fresh condition, the cane would require no further manuring. This is rather overstating the fact, but the advantage of such a proceeding is undoubtedly very great. The leaves should be hoed in as fast as the trashing proceeds; the operation is described on a subsequent page. This, however, could not be done in localities frequented by the white ant, as the fermenting mass of vegetable matter in the soil would immediately form a nest for that destructive insect. In such cases, the vegetable matter must first be fermented in tanks under

sufficient moisture to repel the ants, and may then be ploughed or trenched in between the rows of canes. The same applies pretty much to the cane tops which are not required for planting new ground.

Touching the begass, Wray recommends it to be carried back to the fields by the same carts which bring in the canes, and would have it immediately ploughed or trenched into the soil. In practice, this is very rarely done, despite the volumes that have been written in support of the plan. The reason for this apparent anomaly is sufficiently simple. The sugar factory consumes a very large quantity of fuel, and fuel in the shape of coal or wood is usually very dear and scarce in sugar-growing districts. Hence has arisen the generally-accepted custom of using the begass for fuel, and returning only the ashes (which it leaves behind when burned) to the soil. In this way, a portion of the salts is certainly conveyed back to the soil, but the act of burning has reduced them to an insoluble condition, and their value is thereby greatly diminished. An advantage in burning is the destruction of insect larvæ, and it has sometimes to be resorted to on that account; but it must always be at the expense of the manurial value of the material burnt.

This question of returning the begass to the soil just as it comes fresh from the mill cannot be decided off-hand, as it will depend upon circumstances. These circumstances are that the estate requires both manure and fuel, that the fresh begass will afford either one or the other (but not both), and consequently that the one which is not so supplied must be derived from other sources. The point that then arises for the planter to settle is, which of the two materials (manure and fuel) can be best procured by exterior means. The conditions of each estate will determine the best course to pursue. In any case, the canes must be brought to the mill, and their bulk implies the expenditure of considerable labour in carrying them back to the fields, just at a moment, too, when all hands

are fully employed. Viewing the improvements which have lately been made in the preparation of cane manures, and the highly-concentrated form in which they are now supplied, there is little likelihood of planters departing from the old way; and with the success attending the furnaces for burning undried begass (described on a later page), there is still greater inducement to adhere to the current custom. This being so, only the ash of the begass can be counted on as manure. This will amount to about 5 cwt. from each 100 tons of cane crushed and burned, and its manurial value will not exceed 8*s.* per cwt. It should be preserved with the other waste under a shed out of the rain till used. There will probably be an additional 5 cwt. of ash from other sources (trash, wood, etc.), worth about 6*s.* per cwt.

Next, the feculencies from the clarifiers, and the skimmings, say together equal to 6 tons (from the 100 tons of cane), should be pressed as soon as collected, and would yield 3 tons of juice and 3 tons of cake; this cake, rich in nitrogen, should be dried, with or without previous fermentation, and would yield half a ton of dry nitrogenous manure worth 3*l.* The sediment of fermenting-vats, also containing some nitrogen, would weigh say 4 cwt. when dry, and be worth 10*s.*

Lastly, the dunder. This, to the extent of two-thirds, being used over and over again daily in making up the wash, would leave one-third to be dealt with as manure. This third would amount to 800 gallons or 4 tons from the 100 tons of cane. Whether it would be better to take it on to the field in its liquid state, or first to dry it completely or partially, remains to be ascertained. It would dry to about half a ton, and would contain half of the mineral matter of the crop and some nitrogen (as ammonia), and would be worth about 3*l.* Sooner or later, legislation will step in to prevent the contamination of streams by the present common system of running this liquor into a pond or the nearest brook. Efforts should be made to utilise it for irrigating purposes, or

its suspended and dissolved impurities should be precipitated and recovered before it makes its escape to the river.

Green-Soiling and Rotation of Crops.—There remain to be described the various other methods which modern agriculturists have adopted for maintaining the fertility of the soil.

Green-soiling consists in planting beans, peas, lucerne, indigo, or other plants, between the cane-rows (when canes are first planted), and ploughing them into the soil whilst they are green and succulent; this has a powerful effect in fertilising land, and when performed by agricultural implements, may, even where labour is costly and scarce, be practised without any great expense. Indigo is a very valuable plant for such a purpose as this, and may be planted by a drill (in regular lines), just at the commencement of the rains, and, in 2 months after, be uprooted, laid along near the roots of the young canes, and moulded over. The only part of these operations necessary to be performed by hand labour is the uprooting and placing the plants evenly along the cane rows, so that the plough following may cover them over completely and neatly. If the indigo plants are cut to within a few inches of the ground, when they have attained a good height and show a fair bush, instead of being rooted up, they will again spring forth remarkably soon, and furnish another fine bushy plant before the end of the rains; this may then be rooted up and moulded over as the first. This latter plan presents the advantage of two crops being returned to the soil instead of one, at the cost only of the cutting, which, when the labourers have sharp sickles, is very quickly and neatly performed without entailing any great expense. The indigo plant so applied furnishes a very rich manure for the cane, for which object it is generally appropriated by the natives of India, although not until the colouring matter, forming the indigo of commerce, has been extracted, and the plant becomes partly decomposed. In the Straits, the Chinese who cultivate indigo first extract the colouring matter from the

plants, then take them at once, all dripping with moisture from the vats, to the cane patches, where they lay them carefully along the roots of the canes, and then cover them with mould. Wray states that he has seen Chinese in this manner produce excellent canes, from land so sandy and otherwise unfertile that no European planter would think of growing canes on it. Thus it is in Province Wellesley that, wherever a Chinaman cultivates indigo, he always grows a patch of canes also.

It may be well to mention that indigo must be planted either at the commencement of the rains, or be frequently and plentifully watered at other seasons; hence, wherever the means of irrigation are available, this green-soiling may be practised all the year round. Wray considers it a very cheap and ready means of keeping up the fertility of cane soils; and says it is more especially deserving of the planter's consideration in cases where the begass (from whatever cause) is used for fuel instead of being returned to the soil. Indigo, to grow luxuriantly, requires a generous soil, consequently will only answer expectations where so planted; after the land has been manured, it will spring up vigorously and luxuriantly.

A great variety of plants may be used in the same manner as indigo; but it is very essential to remark that the greatest good can only result from ploughing in the plants whilst quite green and succulent, and that the best time for performing the operation is just before they begin to blossom. In Demerara, the castor-oil plant (*Ricinus communis*) is highly esteemed for green-soiling; and the same may be said of the pigeon-pea (*Cajanus indicus*) in the West Indies and Australia.

In Mauritius the achery bean and the muscate bean are employed for the same purpose. The former is biennial or triennial, and provides green-soiling for two years, and the latter is an annual, and fruits and dies down three months before the yearly cane planting begins. Both form splendid fodder, and if left to rot on the ground are excellent manures.

Rotation of crops as a means of refreshing the soil has long been known and applied in European agriculture, where experiment was forced upon the farmers at an earlier date by reason of the inferior nature of their land. In the rich soils of our tropical colonies, the effect of exhaustion was longer in making its appearance, and hence has arisen that disposition to adhere to a single class of crop as long as the ground is capable of affording anything like a remunerative return. Some sugar-planters have at last appreciated the advantages to be derived from a judicious rotation, and have benefited much thereby, while their neighbours who persist in extracting a crop of canes from the same field every year are gradually ruining the land beyond all hope of recovery within a reasonable time, and are engendering all kinds of disease in their canes by excessive and ill-advised manuring. In Mauritius, it is now becoming the general custom, after the land has borne canes for 2 seasons, to plant it with maize (Indian corn), arrowroot, manioc (cassava), or peas, allowing a period of 3 years between the cane crops.

Two of the commonly adopted green manures of Mauritius according to Noel Deerr are the pea vines *Mucuna atropurpurea* and *Phaseolus lunatus*, which are used when a one or two years' rest is given to the land; where a three or four years' rest can be allowed, the pigeon pea, *Cajanus indicus*, or a Tephrosia, *Tephrosia candida*, known as Indigo sauvage is used. Both of these are woody shrubs, which enrich the soil with nitrogen through the agency of the leaves they shed annually.

Laying Out an Estate.—The laying out of a sugar estate is a very much more complicated affair in Guiana than elsewhere, as it generally includes provision for drainage and irrigation on a far more perfect scale than is common in other parts. An account of the operation as conducted in British Guiana will therefore be most valuable. Here the plantations are on a uniform plan. They are generally narrow rectangular strips of land, with a frontage on the coast, a river, or a canal,

varying from 100 to 300 Rheinland rods (the Rheinland ruthe or rod is about 12⅓ feet). Exceptional cases occur where extra "façade" (water-frontage) has been allowed, giving the estate more of a square form. Every estate is bounded by four dams: the front dam excludes the sea, river, or canal; the back dam, parallel to the former, excludes the bush-water, which, in heavy weather, is very considerable, and would inundate the cultivation. The clay thrown out in forming the adjacent canals or trenches affords the material of which the dams are formed. Along each of the remaining sides, runs a dam from front to back. These are usually termed "side lines." They serve two contiguous estates, and prevent the influx of water from the sides. Thus the very long rectangular strip of land is surrounded with dams, which, when kept free from bush, answer the purpose of a road round the estate; but the produce is brought to the buildings (often situated in front) by canals. In fact, water transport of produce is universal. The arrangement of the navigation system is very simple. From front to back, through the centre of the estate, there runs a dam called the middle walk, with a canal on each side of it. These are termed central canals, and are wide enough to admit of two punts passing each other. The dam forms a path for the cattle that draw the punts. At regular and comparatively short intervals, branch canals strike off at right angles from the central canals, and proceed to within a rod of the draining or side-line trenches, which are parallel to the side dams before described, and adjacent to them. These branch canals constitute the transverse boundaries of the fields, and navigation canals thus lie on three sides of every field, and admit of canes being carried by a short path to the punts. On some estates there is only a single central navigation canal.

These canals are principally supplied by rain, but in protracted droughts, and especially when they are shallow, they are liable to run short of water: hence, whenever access can be got to creek, lake-, or bush-water, it is brought from be-

hind to supply the navigation system. In other instances, salt water has to be taken in from the front, when a cane crop cannot otherwise be got off the ground. The drainage of the estate is equally simple. From back to front, and immediately adjacent to the side-line dams, run the two main draining trenches, generally dug considerably deeper than the navigation canals. The small drains, again, cut at distances of 2 to 3 rods apart, commence within a bed of the middle-walk side of the field, and terminate in the side-line draining trenches, being dug with a fall in their direction. The small drains are thus at right angles to the main draining trenches. In the front dam, the sluices or "kokers" are placed. Sometimes there is only one on an estate, but generally two, one at the end of each draining-trench. The main draining trenches are generally connected together by a trench running along behind the front dam.

The different operations and their cost are as follows :—

The area of cane to be grown is assumed as 100 acres, the land having a water-frontage of 100 rods, and being a good clay soil, with a certain amount of bush and sand-reef upon it. The dams are commenced at the beginning of September, calculating by the end of October to have planted the tops, and thus have the advantage of the coming wet season for bringing them on, so that they might be ready for cutting in November of the following year, when the "arrow" would be well off, and the canes sweetest. Operations open with cleaning off the rough grass and weeds on one of the sides of the 100 acres, say the middle walk side. Here a space of 7 rods outside (or on the savannah side) of the 100 acres is lined out. On the 33 rods of bush land, the wood is cut by the cord. Having everything cleared off 300 rods × 7 rods, all the grass and rubbish, being packed in a line on the savannah side, so as to form a kind of stop-off to keep any of the little water remaining in the savannah from flooding the work, the next consideration will be making up

the dam on the middle walk side. This dam will be 24 feet wide at the bottom, with a top of 8 feet, a height of 5 feet, and a gradual slope on each side of 10 feet, and containing nearly 1200 cubic feet per rod. From the savannah side, 48 feet are lined out; in the centre, line pins are placed so as to form two spaces of 24 feet each, the space on the savannah side being for a trench, 20 feet × 5 feet × 12 feet, which will provide the ground to make up the dam. The other space will be the dam proper. To proceed with this, the blind trench is commenced with, which must be lined out 5 feet × 5 feet, exactly in the centre of the intended dam; all the dirt coming out of this is packed on the empolder side, so as not to be in the way of the men digging the trench. The bottom of the blind trench, 5 feet below the level of the savannah, is thoroughly shovel-ploughed, one shovel of clay lying over the other in perfect rotation.

In commencing to dig the trench 20 feet × 5 feet × 12 feet, the first shovelful of earth must go against the foot of the dam, great care being taken not to allow any to go into the blind trench. Having got rid of this, which is mostly roots mixed with a little clay, the trench can be sunk, all the clay that can be got being thrown into the blind trench. When about a foot of clay is in the blind trench, it should be rammed down tightly, and so on as each fresh foot of clay is thrown in, until the level of the savannah is reached, after which, the centre of the dam 5 feet wide is rammed until it is 5 feet above the savannah. The dam is pared and shaped off, making it 8 feet wide at top and with a slope of 10 feet on each side.

The side-line dam will be the same in every way as the middle walk side one; but digging the side-line trench will give some ground with which to make up part of the dam, having cleared off 6 rods wide of grass and roots, in the same way as on the other side. The side-line trench is lined out 14 feet at top. From this, a space of 1 rod is left from where

the edge of the side-line will fall, and then the dam is lined out 24 feet wide; the blind trench is dug of the same dimensions and in the same manner as on the middle walk side.

From where the space for the dam stops, a trench is lined out 14 feet × 3 feet × 14 feet. In digging the side-line, all possible slope is thrown on the dam side, so that when it is finished there is only 9 feet of bottom; this is quite sufficient to drain 100 acres, and by having a long slope, the edges of the side-line are not so liable to fall in. The two side-line trenches afford sufficient ground to make up the dam to 1200 cubic feet.

The side dams being complete, there is now only the back dam to finish. The back dam will be exactly the same as the middle walk dam. The dam-bottom is lined out 24 feet, then 24 feet more (allowing 4 feet from edge of trench to bottom of dam) are taken for the trench, so as not to dig a cross canal in the first field, No. 1, but bring out all the canes on the main navigation trench and the canal between Nos. 1 and 2. Thus the back dam is not weakened by having a trench dug exactly in front of it; this plan also to a great extent prevents the dam from leaking, as when a canal is dug in front of a dam, the first bed of canes suffer very much from the leakage from the dam, and from the navigation water swelling up and overflowing the bed. The trench behind the dam, 20 feet × 5 feet × 12 feet, affords sufficient ground to make up the back dam.

In joining the middle walk and side-line dams to the back dam, the back dam blind trench must be carried through the whole width of the side-line and middle walk dams, so that there may be no division between them, but that they dovetail into one another. In making up the back dam, a space of three rods should have been left opposite to the main navigation trench, to facilitate putting in the back dam koker to supply the navigation with water. The koker is 4 feet × 4 feet × 28 feet long, and has six frames con-

taining 36 cubic feet 9 inches. The gallows-post, windlass, etc., etc., contain about 13 cubic feet 7 inches; the foundation timbers, piles, caps for back of koker, wings, etc., in front, contain 76 cubic feet 2 inches; or a total cubic contents of greenheart timber for koker = 126 cubic feet 6 inches. In addition, there are 300 feet of greenheart slabs, for pauling off wings, back of koker, and foundation: 17 pieces greenheart, 28 feet × 12 inches × 2 inches, for frame, boarding up, etc., and door; 50 lb. 4-in. spikes, small ⅜-in. chain for door, sheaf for hoisting door, etc. If the door of koker is placed 18 feet within the dam from the savannah side whenever it is desired to repair the koker, or in case of an accident, a stop-off in front 8 feet wide can be put in, and will still be in a line with the dam, so that it will have an equal pressure with the rest of the dam, and cost next to nothing in comparison with making up a stop-off, if the koker came up to the foot of the dam.

Lining out the middle walk trench is commenced by lining out a space 20 feet wide from the foot of the middle walk dam. On this space, all the ground from the middle walk trench is thrown, so as to form an extra or company dam for navigation purposes, as, if the mules were allowed to travel on the outside savannah dam, it would soon be trodden out of shape and become weak, and any leakage from the dam, with the mules walking about on it, would soon increase, and cause the dam to "shove" down into the trench. This extra dam will also greatly strengthen the outside dam. The middle walk trench is made 14 feet × 4 feet × 12 feet.

The ground from this trench makes up a dam 18 feet wide and about 3 feet high. This must be added to the outside dam in such a manner that no space shall be left between; that is, the two dams, having been pared off, form only one large dam, with no perceptible joining.

Before commencing to dig the cross canals, the wood in field No. 4 is cut and corded, amounting to 200 cords. The 9 cross canals are lined out 12 feet × 4 feet × 12 feet. On

10070
CALAB LING LIBRARY

the side line, the digging of the canals is stopped 2 rods from the trench, so as to prevent leakage. "Turns" at the canal heads lead into the main middle walk trench.

The small drains are dug 2 feet wide and 3 feet deep. Commencing in field No. 1, 3 rods are measured off from the back dam, and there the first drain is lined out, and so on, placing the drains 3 rods apart. The drains are dug only 98 rods long, leaving 2 rods on the middle walk side of the field, so that the water may not leak out from the middle walk trench. The drains, when finished, are 2 feet on the top and 1 foot at the bottom, having a gradual slope of 1 foot on each paring. In the sand reef, field No. 5, a 4-foot or "tracker," is lined out 4 rods from the middle walk trench, so that it may carry off the water from that side of the field; sand reefs require more digging than other lands, and hold the moisture more.

Appended (see following page) is a table of the cost of the operations.

Drainage.—The proper drainage of a sugar estate is one of the most important matters for the consideration of the planter.* This is especially the case in localities which possess no natural means of taking off the surplus water, as, for instance, the flat lands of British Guiana. In Demerara, few subjects of late years have attracted more attention, or excited more discussion among planters, and those connected with the cultivation of sugar, than the proper drainage of the soil. Looking at the vast extent of valuable land occupied by, and the large amount of money yearly spent in cleaning out the open drains at present in use on almost all the sugar plantations in the colony, it requires no great research to discover the reasons for the interest which this subject has attracted to itself. Attempts have been made to establish the

* See 'The Drainage of Fens and Low Lands by Gravitation and Steam Power,' by W. H. Wheeler, M.I.C.E. London: E. & F. N. Spon; 1888. 12*s.* 6*d.*

system of tile drainage, and had this been attended with success, nothing would have been left to say on the subject; but planters continue to use the old system.

DESCRIPTION OF WORK	Number	Price paid	Local coin	English equivalent
FOR MIDDLEWALK DAM.		$ c.	$ c.	£ s. d.
Clearing off 7 rods grass in savannah	267 r.	0 48	128 16	26 13 8
Cutting 20 cords wood from 33 r. bush land	..	0 40	8 00	1 13 4
Digging blind trench, 5 ft. × 5 ft.	300 r.	0 40	120 00	25 0 0
,, trench in savannah, 20 ft. × 5 ft. × 12 ft.	300 r.	3 20	960 00	200 0 0
Ramming blind trench	300 r.	0 40	120 00	25 0 0
Shaping off and paring dam	300 r.	0 48	144 00	30 0 0
Incidental expenses, making up dam	300 r.	0 12	36 00	7 10 0
FOR SIDE-LINE DAM.				
Clearing off 6 r. grass in savannah	300 r.	0 36	108 00	22 10 0
Digging blind trench	300 r.	0 40	120 00	25 0 0
,, trench in savannah	300 r.	1 00	300 00	62 10 0
,, side-line trench	300 r.	2 00	600 00	125 0 0
Ramming blind trench	300 r.	0 40	120 00	25 0 0
Paring off and shaping dam	300 r.	0 48	144 00	30 0 0
Incidental expenses	300 r.	0 12	36 00	7 10 0
FOR BACK DAM.				
Clearing off 5 r. grass in savannah	103 r.	0 30	30 90	6 8 9
Digging blind trench	103 r.	0 40	120 00	25 0 0
,, trench in savannah	103 r.	3 20	329 60	68 13 4
Ramming blind trench	103 r.	0 40	41 20	8 11 8
Paring off and shaping dam	103 r.	0 48	49 44	10 6 0
Incidental expenses	103 r.	0 12	12 36	2 11 6
Putting koker in back dam, materials, labour, and superintendence	..	..	273 18	56 18 3
Digging main navigation trench	300 r.	1 44	432 00	90 0 0
Shaping off empolderside of middle walk dam	300 r.	0 24	72 00	15 0 0
Cutting 200 cords wood, No. 4	..	0 40	80 00	16 13 4
Transporting 200 cords of wood to navigation trenches	..	0 08	16 00	3 6 8
Digging 9 cross canals, each	98 r.	1 00	882 00	183 15 0
Making turns of cross canal heads into main trench, 9 canals, each	..	0 64	5 76	1 4 0
Digging small drains	100 a.	9 00	900 00	187 10 0
,, 4-foot in sand reef	30 r.	0 12	3 60	0 15 0
	..	..	6192 20	1290 0 6

As a rule, the crust of the earth in the colony of British Guiana is composed of a stiff impermeable sort of clay, streaked with layers of fine sand or "caddy." Now, it is well known that all clay soils in their natural state resist the

passage of water through them, and therefore it will be seen that, in the case of a heavy fall of rain, the most natural way of drainage will be from the surface. The water in running off the surface flows into open drains. These drains are generally 3 rods apart, seldom less than 2, and scarcely ever more than 4. The bottoms of these drains are usually from 4 to 8 feet below the level of the land, while the tops vary from 3 to 9 feet in width (by this is meant the distance from the lowermost cane root on the one bank to the nearest one on the other). These drains run along the whole length of a field, dividing it into beds of 3 rods wide, and issue into what is called a side-line or main draining canal, which is generally about a foot deeper than the drains. The water from this side line, in the case of an estate having natural drainage—i.e. where the river or sea which is the receptacle for all this water is (at ebb tide) on a lower level than the side line—is discharged through a koker, generally from 4 to 6 feet in diameter, and, in the case of very low-lying estates, is thrown out by means of what are called draining-engines. This latter method entails, in wet weather, a great deal of expense in the way of fuel, and, considering the immense outlay to procure such apparatus as is required for this one item, the profits for the cultivation of sugar would need to be enormous.

It has been said that the present system is one of surface drainage—i.e. the rain does not thoroughly penetrate the soil, but almost immediately runs off into the drains. For this purpose, the beds between each drain are rounded off, being high in the middle and sloping at each end; drills are also dug, commonly 1 foot deep by 2 feet wide, crossing the bed from drain to drain in order to facilitate the flow of water. Of course, this is all very well in a continuously wet season, where the only object is to get the water off as quickly as possible; indeed, it would seem that this is the only advantage in drains of this sort. But in the stiff clay lands of this colony, where the want of porosity is very great, and there-

fore the absorption of rain very small, it is probable that the benefit which would accrue to the soil from a good heavy shower of rain in a dry season (and it is then it is most wanted), is, in the present state of drainage, reduced to a minimum.

This, however, is not the only disadvantage in open drains. The greatest, and assuredly the most hurtful to a planter, being the great extent of land occupied by them. Take a field, say, of 10 acres. This measures 100 rods from middle walk to side line, by 30 rods in breadth, and consists of 10 beds of 3 rods each, measuring from the middle of one drain to the middle of another. Take the width of the drain, say, at 4 feet. Thus there are between each two beds intervals of 4 feet, which in 9 drains, without counting a middle cross tracker, would be 36 feet, or nearly 3 rods. Thus we have 3 rods × 100 = 300 square rods * = one acre, or, on an estate of 500 acres, no less than 50 acres are lost on drains alone, and this is no exaggeration.

Besides this, these open drains are constant sources of annoyance, as they are perfect nurseries for grass and weeds, and, however well constructed, are perpetually having their sides slipping in, forming "stop-offs" across them, and greatly preventing the flow of water. Another disadvantage is the inability to use the plough or tilling machine, which would render planters a great deal more independent of immigration than they are at present. The last, but by no means the least disadvantage, is the loss of the great amount of fine earth which is being continually swept into the drains during rainfalls.

Mention has already been made of the futility of tile drainage in this colony. The failure may be attributed in the first place to the great distance (36 feet) which the drains

* These are the old Rheinland rods or ruthe before referred to (p. 51). An English acre contains 43,560 sq. ft.; 300 square rods would be equal to 43,200 ft. if the rod is reckoned at 12 ft., or 45,633 if at 12⅓ ft.

are placed apart. In England and Scotland, where the land is of a clayey nature, tile drains are seldom placed at more than 15 to 20 feet from each other, and there the rainfalls are much less heavy than in British Guiana. In the second place, it is a question whether the water can gain access to the pipes in sufficient quantities by means of the small chinks between them, and especially where the surrounding layer of clay will tend to stop up the interstices altogether. Of course, on an estate where the soil is very porous, there is no doubt that tile drainage, if the drains are placed sufficiently close (say 24 feet apart), would be the proper thing ; but the only method which seems adequate to the wants of this colony, is that of stone drains. The great and only difficulty will be the immense outlay of money requisite, but in a very few years the advantages of it will doubly compensate for the expenditure. Of course, there is no question but that covered-in drains, if able to draw off the water, are more profitable than open ones. The kind of drain advocated is what is called a "box" drain, and which is often used in Scotland with thorough success, in soil exactly similar to that in this colony, and where it is considered that tiles, which are, no doubt, much less expensive, would be wholly ineffective.

In the first place, it is assumed that the old open drains will be used as trenches in which to place the stones, as it will not be necessary to incur more expense by digging new ones nearer together. Operations are in this case commenced by digging the side line to the utmost depth that the koker will allow ; the old drains should then be neatly dug to a depth of about 1 foot above the bottom of the side line. While this is going on, the stones should be brought in punts, and laid along the drains on the bank ; after the old drain has been properly cleaned out, the stones, which should be formed flat, should be placed, the largest and flattest (say 1 foot square), at the bottom, smaller ones (say 8 inches square) at the sides, and similar ones to those in the bottom

100710

will serve to go on the top as covers. The fragments, or what has been chipped off the stones in order to bring them into shape for the sides, etc., should be placed on the top to a depth of 6 inches, and the whole covered over with earth. Of course, this can only be done where new land is to be taken in, or the fields to be replanted, as the beds adjoining the drains will have to furnish the earth which is to be backed on to the top of the stones.

In the case of a Dutch bed field, where the drains run into a tracker, it would be advisable to leave the tracker open. Where the drains run from middle walk to side line, there might be a cross open tracker in the middle of the field, into which all the drains in the first half of the field would fall, with an open drain running thence to the side line. The drains in the remaining half of the field would be quite independent of, and unconnected with, those in the first part. This plan of keeping open two "4-foots" would probably be a great advantage in case of heavy weather, when the kokers or draining-engines are unable to take off the water fast enough, and it would be no hindrance to the use of the plough, which could be run on each side alternately.

Appended is an estimate of the cost, which will undoubtedly be the chief obstacle in putting this system into practice. Stones of the quality required cost, say $2 or 8*s.* a ton, landed on an estate. A drain will require, say, 6 cwt. per rod, or, in a drain of 100 rods, 600 cwt. = 30 tons, or 24 tons, per acre. Thus—

	Per Acre
24 tons stone, at $2*	$48 00 (10*l.* 0*s.* 0*d.*)
Filling into punts, at 8 cents a ton	1 92 (0*l.* 8*s.* 0*d.*)
Throwing out, at 8 cents	1 92 (0*l.* 8*s.* 0*d.*)
Breaking stones, and placing in drain, at 8 cents a rod	8 00 (1*l.* 13*s.* 4*d.*)
Cleaning out drain before stones are put in, at 2 cents a rod	2 00 (0*l.* 8*s.* 4*d.*)
Backing in earth and filling up drain, at 48 cents a rod for both sides	48 00 (10*l.* 0*s.* 0*d.*)
Total	$109 84 (22*l.* 17*s.* 8*d.*)
Or, on estate of 500 acres	$54,920 00 (11,441*l.* 13*s.* 4*d.*)

* The Guiana dollar is 4*s.* 2*d.*, the cent ½*d.*

As to the question of what sort of labour is to be got for this work, it will probably be necessary to have recourse to Chinese.

The chief disadvantage is the scarcity and consequent expense of stones; but were planters to adopt this system on a large scale, more labour would be employed on quarries in the interior, and in a few years the supply would increase so much as to reduce the cost to a minimum. It may be objected that the drains should not be 36 feet apart, when that is the chief cause of the failure in the tile drains. But the size of the stone drains is so great as compared with that of tiles, that the stone drains are quite capable of holding the water that runs into them even from a distance of 18 feet on each side. The advantages, on the other hand, are many. The additional acreage of itself would be enough to compensate for a great outlay of capital. Then there is the saving of all the fine soil which in open drains is washed away with a heavy rainfall, the avoidance of all labour and trouble after the drains are once formed, and the great benefit of being able to use the plough.

Lastly, all soils, and especially those in which clay forms a principal part, possess the property of contracting when dry and expanding when wet, so that, after the upper water has sunk into the drain, a very great contraction takes place, especially in a dry season, causing innumerable cracks and fissures in the soil, sometimes extending to a considerable width and depth. Now this cracking of the soil is of the very highest importance in draining land; in fact, it is very doubtful whether it would be possible at all to drain clay lands by covered-in drains without it. The tendency of drainage is to increase this cracking action, and it will always be observed that the main fissures commence at the drains and spread from them in almost straight lines into the subsoil, forming so many minor feeders all leading to the main drain. When these cracks are once formed, the falling of loose earth

into them, and the action of the water which passes through, prevent them from ever closing so perfectly as to stop the passage of water. Thus the subsoil is pervaded by a perfect network of small drains which, in case of covered-in drainage, are always being filled up with the fine rich mould carried down by the rain on its way to the main drain, and this probably constitutes by far the greatest advantage of covered-in drainage. Not only is the mould not swept away to fill up the drains and side lines, but it is permitted to filter through and permeate the stiff soil below, altering it for the better year by year, turning the clay into the consistency of a fine loam, and, from the richness and consequent fertility imparted by it, forming a new soil, which, in a very few years, will pay the planter doubly for his outlay.

*Irrigation.**—Closely related to the subject of drainage, is that of irrigation, a matter of at least equal importance to sugar-planters, but one of which they are mostly ignorant. The apathy which has been manifested in this respect is the more remarkable, since, in a tropical country, the subject appears in a stronger light than in the temperate and humid climate of England. Hence, many proprietors of sugar estates, who have never been out of the United Kingdom, cannot conceive the loss that is sustained by their fields not being irrigated during dry weather.

Whilst in the greater part of Upper India, it is impossible to cultivate even the common native cane without constant irrigation, in the West Indies, the Straits Settlements, and many other parts, the cane is grown altogether without other moisture than that obtained by the rain. In Singapore, fine seasonable showers usually occur every fourth or fifth day, so that the soil is kept quite moist, and in a condition highly favourable to vegetable life; but even in this favoured spot, spells of dry weather happen, and do considerable damage

* For an account of many methods of raising water, consult 'Spons' Mechanics' Own Book' (E. and F. N. Spon, Ltd., 57 Haymarket, London). Price 6*s*.

to the sugar-canes. Malacca is very similar to Singapore in regard to frequent showers and occasional periods of hot, dry weather; while Penang and Province Wellesley are much more subject to spells of dry weather, which also are of far longer duration. But there is not one estate in Province Wellesley which could not irrigate every field, by merely raising water from a depth of from 6 to 10 feet, in the very driest weather.

In the West Indies, long periods of dry weather very frequently occur, when the planters are in despair at the ruin and destruction of their crops; but few appear to recognise irrigation as their great and only safeguard.

In the matter of irrigation, very many estates have the facilities already existing, awaiting only the application of labour to turn them to proper account; others are in a position to create facilities, by digging wells, etc.; whilst some are so situated that irrigation would be next to impossible. In the first case, the methods whereby the water may be conducted and distributed over an estate can be easily arranged, if once the determination be formed to make it available; in the second, the grand question is the depth to which a well would have to be sunk, in order to secure sufficient water for the purpose required. In a very great number of instances, the depth would be moderate, consequently the expense would be limited, and the undertaking such as could with great propriety be carried out; but where the depth is extreme, and the expense necessarily very great, of course it could not be entertained.

The application of water to a cane-field must be viewed (1) in respect to the manner in which it renders soluble the constituents of the soil, and in that form presents them to the plants, (2) in regard to the oxygen that it contains in solution, which acts on the organic and alkaline constituents of the soil, and converts them into alimentary substances for plants, and (3) in relation to the various other substances which it

holds in solution, and consequently supplies to the soil. In these two latter respects, the waters used in irrigation must be extremely variable.

River-water generally contains silica, potash, lime, and other substances conducive to fertility, independent of the extra matters contributed during heavy rains. During the dry season, when irrigation is so necessary, the water would only supply those substances ordinarily held in solution. The sugar-cane thrives luxuriantly in marshes, argillaceous soils, and other places, where the change of water constantly renews the supply of dissolved silica. The potash abstracted is also restored to the soil by annual irrigation. This is found to be of such advantage, that in some places the fallowing of the land is superseded by inundation.

In irrigation during hot dry weather, there is another feature which most materially influences the plant; this is the vapour which a strong sun causes to rise from irrigated lands. This vapour, as it leaves the ground, passes up through the foliage of the canes, in order to escape into the air; but in its passage, it is powerfully attracted by the leaves and other green parts of the plants, and its moisture is made use of. When the air is exceedingly dry, the creation of this moist atmosphere around and amongst the growing canes must be highly beneficial, as the external organs of assimilation are thereby supplied with the means of exercising a more vigorous action, to the refreshment and corresponding improvement of the whole plant. Hence it is apparent that irrigation benefits the plants both by the food which it supplies to their roots, and the nourishment that it affords to their leaves and other green parts.

The rough and ready methods of irrigation practised in India, Egypt, Arabia, Persia, and China, deserve passing mention.

On the Nile, the irrigating machines mostly consist of an endless band, with a number of wide-mouthed earthen pots tied

on it at intervals; this band works over a drum-wheel having spikes or teeth, fitting into holes in the band, so as to catch and carry it round; while the drum-wheel shaft is moved by a large cog-wheel fitted on a vertical shaft, worked by animals of various descriptions. On the Euphrates, the same kind of machine is used, as well as the Persian wheel. In China, bamboo wheels, endless bands, and what is termed the "Chinese pump," are in constant use in the dry season.

The methods pursued in India are chiefly three. The first is by means of an upright pole placed in the ground, the top of which is forked to receive another pole, fixed by means of a pin, forming the axis on which the cross pole works. The short end of the cross pole carries a large stone, sufficiently heavy to counterpoise the receptacle, which is attached by a rope to the other end of the pole.

The second Indian plan is performed by the aid of baskets, and in this case, the water of ponds is used. The basket used is round, closely woven, and very shallow; to it are attached four strings, two on each side, about 4 or 5 feet long. Steps are cut in the bank about 6 or 7 feet above each other, with little channels running from the top of one to the foot of the other; two men take up their positions at each of the steps, and bale up the water with their baskets. About 2½ feet above the level of the pond, places are cut for the two men to stand, having the water between them; they then take the basket by the strings (each man having one in either hand), and giving it a swinging motion, just skim the top of the water, filling the basket, and jerking its contents cleverly on to the top of the first elevation or step. Here it is received in a kind of bed with raised edges, and having grass laid at the bottom to prevent loss by splashing. From this, it runs along to the foot of the next step or elevation, whence it is raised as in the former case; and so on to the next elevation, until it reaches the general surface of the land. By this method, 6 men are required to effect the elevation of each

basketful of water to the surface of the land, which may be reckoned at from 18 to 21 feet above the level of the pond.

The third Indian mode is by a "moat" (a hide bucket holding about 12 gallons) and a pair of bullocks. Over the well is erected a rude but strong framework, with a wooden shaft running across, bearing a small revolving drum-wheel. Into this, the rope is dropped, and the cattle being attached, the moat is let down into the well and filled with water; the cattle then run down an inclined plane, of the same length as the depth of the well, and draw up the moat, which is immediately emptied by the man stationed on the well for that purpose. To work the moat all day requires four bullocks, three men, and one boy; these will, according to native calculation, irrigate one-third of a pucka beegah in that time.

A smart set of bullocks and driver may make one trip a minute, delivering 12 gallons of water, which would amount to a distance of about 7¼ miles travelled in the day, and of water raised about 7200 gallons. This, together with its distribution over the field, would only cost about 1*s.* 2¼d., making for the irrigation of an acre, according to this plan, the sum of 5*s.* 4*d.*

The utilisation of the wind as a motive power for working pumps is of the greatest importance in this connection, wherever it can be successfully accomplished.

Next to having proper means of raising water, the important point is to have a regular and well-devised plan for conveying the water on to the different fields to be irrigated. This leads back to the subject of laying out an estate in the first instance (see pp. 50–56), in a methodical and properly arranged manner. Where this is done, the various roads situated at regular distances would also form the tracts or lines along which the water-courses would run, each cross-road having its water-course, into which the water supplied at given points could be directed as might be necessary.

The estate should be cut up into fields of from 30 to

50 acres each, in order that a properly sunk well may be allotted to each field, in case no river or pond be at hand. Where possible, the fields should have some regular form, so that the well may be made in the centre. The next point is to conduct the water pumped up from the well, so that little or none of it is lost during its transmission. This object may be gained by laying down common drain-pipes (of whatever diameter may be found necessary), say in four regular lines about 260 feet apart. By this method, 30 acres of land may be permanently laid down at a small expense, as not more than 5500 pieces of piping would be necessary. Each pipe should be 1 foot 3 inches long, one end having a shoulder, and being large enough to receive the end of the other pipe to the extent of 3 inches. At intervals of from 40 to 50 feet along the line of piping, a good-sized naud (earthen vessel) is sunk in the ground, so that the ends of the pipes fit into it about 2 or 3 inches below the rim exactly opposite each other, and are made water-tight by the application of a little mortar. These vessels serve as receptacles for the water, from which it may be distributed over the field, either by tossing it out with wooden shovels or brooms, or by a small pump irrigating-machine, and so throwing a jet of water over the land as far as the power of the machine will carry it. These receptacles also serve as points from which the water can be drawn into any branch-piping or mud-channels in the fields; and they are of much utility in detaining the mud, sand, or other matters which might otherwise lodge in the piping, and obstruct the free course of the water.

Of pumps, it may now be said that their name is legion, and it would be quite impossible here to attempt a description of even the most noteworthy forms. Nor is it necessary, as they figure in most engineer's catalogues. The planter should always choose the simplest.

Propagation of the Plant.—Propagation is usually effected by means of cuttings from the stems. For this purpose, none

FIG. 7.

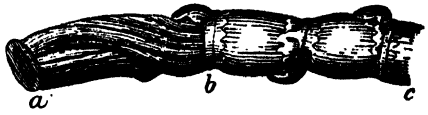

FIG. 8.

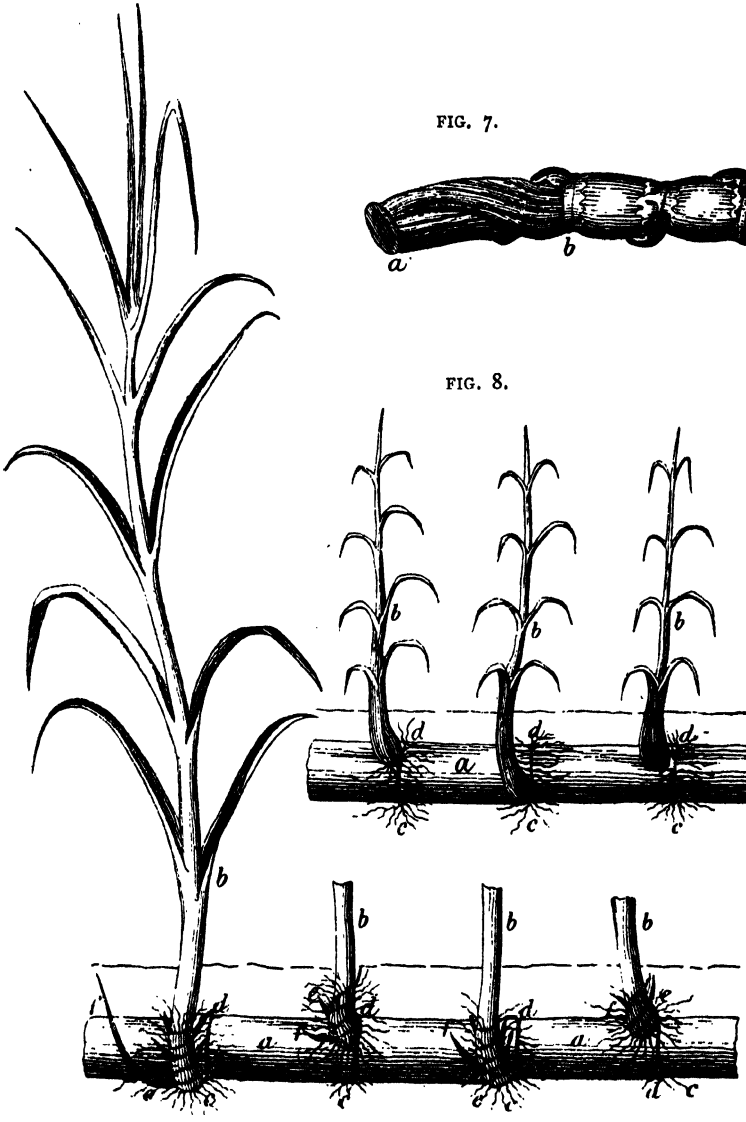

FIG. 9.

CANE CUTTINGS.

but the healthiest and most vigorous canes should be selected; neglect of this point will result in disease and deterioration, and sooner or later new plants have to be introduced.

Every part of the cane stem having a perfect "eye" or bud will put forth a new plant, and it sometimes becomes necessary to take advantage of this circumstance, and utilise every portion of the sound canes for this purpose. Where there is room for choice, however, preference is usually given to the few upper joints nearest the leaves, usually termed the "cane-top." But this is not the case in Louisiana, where preference is given to the main stalks, and tops are used only for economy's sake. An ideal cutting from the cane top is shown in Fig. 7. The part included between the letters *a b* is a portion of the top stripped of its leaves; the part included between the letters *b c* embraces one, two, or three of the uppermost "joints" of the cane.

When planted, the eyes at the joints commence to spring forth, and at the same time a number of roots are thrown out around the whole of each joint; these roots serve to supply the young plants with the means of subsistence till they are advanced enough to put forward roots of their own. Fig. 8 shows the condition of a cutting with three eyes at this stage; *a* is the cutting, *b* are the young shoots springing from the joints, *c* are the roots from the joints, supplying nutriment to the young shoots, *d* are the joints whence the roots and shoots originate.

As the shoots develop, the parent cutting gradually dies away and decays, while the young shoots become furnished with perfect roots of their own. This stage is illustrated in Fig. 9; *a* is the cutting, *b* are the young shoots springing from the joints, *d*, *c* are the remnants of the old roots on the joints of the cutting, *e* are the new roots thrown out by the young shoots themselves, and forming their support independent of the now decaying parent cutting, while *f* are the fresh buds or eyes which appear on the joints of the young shoots (now

become good-sized plants), and which also develop into plants.

Propagation from Seed.—Until within the last sixteen years, the idea that the sugar-cane could produce fertile seeds, was, by the great majority of planters and botanists, held to be absolutely without proof. Bruce, in his "Travels," states that they have in all times been so produced in Egypt and elsewhere, but the planters were of the opinion that he was mistaken, because, they alleged, no variety of sugar-cane was known to perfect its seed, either in India, China, the Straits of Malacca, Egypt, or in the South Sea Islands; and the fact that in all these countries the cane is entirely propagated by cuttings, they regarded as conclusive on this point.

The "Kew Bulletin" for December 1888 states that, "In common with many plants that have been for a long time under cultivation, and reproduced solely by means of buds and suckers, the sugar-cane so rarely produces mature fruits that no one, so far as we are aware, has ever seen them. Certainly in the rich Herbarium at Kew there are no seed-bearing specimens. In botanical works the subject is often referred to, but apparently only to restate the fact that botanists like McFadyen in the West Indies and Roxburgh in India have never seen the seeds of the sugar-cane. Schacht is one of the few persons who have given a good description of the flower of the sugar-cane, including the pistil; he also had not seen the ripe seed."

Some years ago Professor Harrison searched through a number of botanical works in the British Museum, and found complete descriptions of the seed of the sugar-cane. Dr. Dutrone in 1790 thus describes the inflorescence of the cane: "Its characteristics are these: it has no impalement, but a woolly down, longer than the flower that encloses it; the flower is bivalve; the valves are oblong, acute-pointed, concave and chaffy; it has three hair-like stamina, the length of the valves, terminated by oblong summits, and an awl-shaped

germen supporting two rough styles, crowned by single stigmas; the germen becomes an oblong, acute-pointed seed, invested by valves."

When, in 1886, Professor Harrison and Mr. J. R. Bovell, superintendent of Dodd's Reformatory, Barbados, attacked this subject, it was not with the object of proving that the sugar-cane could produce seed, as they had knowledge of previous successful experiments in that direction, but to find, if from the seed of the sugar-cane, it was possible to produce seedlings of new varieties, which might possess more desirable properties that the present staple kinds. This object has been steadily kept in view, and has been pursued in Barbados, Trinidad, British Guiana, Martinique, Mauritius, Java, Singapore, and Queensland. In September 1888 they reported to the Governor of Barbados the results obtained on the experimental fields at Dodd's Reformatory. The chance of the seed being fertilised being much greater in the fields, where numbers of canes of different varieties are growing side by side, than where, as is usual in the West Indies, one variety only is being cultivated, a careful search was made in the immediate vicinity of the cane plots, and seventy or more self-sown seedling canes were obtained. They were very delicate in their nature, and susceptible of injury by sun and wind. From a careful examination of the seedlings there appeared to be ten varieties, differing somewhat in their characteristics from the varieties cultivated in 1887 and, in several instances, having in part some of the characteristics of two or more of the varieties.

Subsequently portions of cane arrows were found containing apparently fertile seed. These were collected, and the seeds carefully separated from the spikelets of the panicles and sown at intervals in January, and ten days after some of the seeds were seen to be germinating, but of the apparent seeds, less than 5 per cent. germinated, and not more than one fourth of the latter finally survived.

In a Report issued by the Government of British Guiana on the agricultural work at the Botanic Gardens, and the Government Laboratory for the years 1896–1902, Professor Harrison gives the following general deductions with regard to seedling canes :—

"1. It is not possible to form an opinion as to the probable richness of the seedling progeny from the richness of the parent cane. This is applicable not only to the actual seedling but to canes propagated from it by cuttings.

"2. In the majority of cases the saccharine richness of the parent variety appears not to be transmitted to either the actual seedlings or to canes propagated from them by cuttings. But in the case of a few varieties there has been found a tendency for the seedlings to approximate to the sugar contents of the parent kind.

"3. Similar conclusions hold good with regard to the percentage of non-sugars ('gums') present in the juice. The glucose-contents, and therefore the glucose-ratio and in part the quotient of purity are governed by the relative degree of maturity of the canes examined and analysed.

"4. Except in some of the more inferior kinds, among both the old varieties and seedling varieties, the size of the individual cane from which the seed is taken apparently in no way affects the size of the offspring, but there is no doubt, as has been repeatedly shown during the experiments, that the average size of the parent variety, with occasionally conspicuous exceptions, closely governs the average size of its offspring.

"5. Experience has not altogether confirmed the earlier experience with canes obtained from the seeds of seedling canes. Although the majority of the seedlings obtained from the seed of the seedling varieties show deterioration, some have been obtained of superior promise.

"6. The fertility of seeds obtained from seedlings is far greater than it is in those obtained from the majority of kinds of the older canes.

"7. While the seedlings of the older varieties with but few exceptions show marked tendency to variation, the seeds obtained from seedling varieties do not possess this property to anything like the same extent, and in many of them the offspring appears to come fairly true to parentage; this is especially the case among those we have studied with No. 95 and No. 74.

"8. The range of variation among the seedlings is far greater in those obtained from parents which are striped than amongst those derived from self-coloured canes, and this is so with regard to colour, size, and sugar contents."

From the experiments at Barbados, 1901–3, with seedling canes and first ratoons, it appears that it will require a few years more before a final decision can be reached, although the results are so far satisfactory. The results are chiefly valuable as a guide to the elimination of useless seedlings from further experimental cultivation. It is hoped that the more promising varieties may ultimately rise to the rank of selected seedlings to be tested at the local stations.

From an examination, frequently repeated, in which two canes from the same plot, one of which had arrowed and the other not, were analysed joint by joint as recommended by Professor Went, it was found by Prinsen Geerligs that the constitution of the already coloured joints was almost identically the same in both, while the saccharine content of the white upper portions of the arrowing cane was slightly inferior. Hence it follows that the process of arrowing only very slightly diminishes the saccharine content of the cane.

Planting.—After the estate has been properly laid out and drained, the next operation is to bring the soil into a perfect state of tillage, which is effected by the usual routine of ploughing, harrowing, hoeing, digging, etc., as for any other crop, and demands no special description here. The land being in a fit condition to receive the cuttings selected, planting is the next operation to be described. This hatu-

rally divides itself into several distinct sections, such as preparing spots for the reception of the cane cuttings (termed "lining out" and "holing"), setting out the cuttings in their places, etc.

Lining Out and Holing.—For facility in carrying on all the operations incidental to raising a crop of sugar-cane, it is essential that the estate be laid out in a regular and systematic manner in the first instance. When this is done, all subsequent steps are much simplified. Perfect regularity in the rows of cane is very important. This is attained by "lining out" the fields with great care, by means of long lines and poles. Each field, varying in size usually between 5 and 25 acres, is first divided up into convenient sections by tall poles, placed say 100 feet apart on each side. Between these are stretched long tapes carrying pieces of conspicuously-coloured rag which indicate the distance apart at which the holes for the canes have to be made. Small stakes are then driven in at the rags by a gang of labourers following the tape, each stake occupying the centre of the hole to be dug.

The distances apart at which the holes are situated, as well as the dimensions of the holes themselves, are subject to no absolute rule. Very often, the holes are made 2 feet apart in rows 3 feet asunder, but much depends upon the soil and climate. Common dimensions for holes in the West Indies are 15 to 18 inches square, and 8 to 12 inches deep; in Guiana, they may be said to average 3 feet square at the top, diminishing to 14 inches at the bottom, and about 8 inches deep. Since ploughs have come widely into use in tropical agriculture, there has been a growing disposition to replace hand-dug holes by furrows turned by the plough, the latter effecting a great economy of labour. Ploughing is universal in Louisiana. In this case, it is generally necessary to retain the lining out, as only the most experienced ploughmen will preserve perfect regularity in the intervals between the rows without some guide.

Setting Out the Cuttings.—The number of cuttings to be placed in each hole, or in each 2 feet of trench, varies between 1 and 4, according to their degree of vitality and the prospects of their striking root. With good sound cuttings, 2 placed at about equal distances from parallel sides of the hole will amply suffice; when 3 are set out, the same sort of disposition is generally adhered to, the 3 pieces lying parallel with each other and with 2 sides of the hole; when the cuttings are very poor, and 4 are considered necessary to ensure a plant from each hole, they are more commonly arranged in a square, corresponding with the sides of the hole. The usual plans of setting out in trenches are (1) to place the cuttings end to end at a little distance apart in one continuous straight line, (2) to allow them to overlap each other in a somewhat zigzag fashion, and (3) to lay them side by side obliquely across the trench. It is preferable to plant too heavily rather than too lightly, as the former evil can be easily remedied by subsequent lopping, while the latter entails a filling up of the gaps with new cuttings, which can rarely be done without in some degree disturbing the adjacent plants.

The natives of Bengal have a peculiar method, which is often adopted by European planters there. This consists in burying the cane-cuttings in a pit until they sprout, when they are carefully removed and planted out in the fields. In placing them in the pit, great care is taken to have them in regular layers, with wet straw and a little mould between the layers; and the most delicate manipulation is needed in removing them, or the white and tender shoots will be broken off. It is a useful way of keeping cuttings over for a time when waiting for the fields to be ready for planting, and plants succeed very well when set out in moist hot ground; but they are quite unfit to be transferred to cold damp situations, or even to hot land which is also dry.

In any case, the cane-cuttings when laid in position in the holes or trenches, are covered with a thin layer (say 1½ to 2½

inches) of earth. They thus lie sheltered from direct sun-heat at the bottom of a more or less deep hole, which forms a natural receptacle for rain or any other moisture.

The time for planting will of necessity be governed by the character of the local seasons, and no absolute rule can be laid down for it.

Moulding and Banking.—In about a fortnight, young sprouts push themselves up through the covering of earth; these are immediately "moulded" round with some of the soil still remaining from the hole or trench. This moulding operation is repeated at intervals, as the plant grows, till the hole or trench is filled up, and is further continued till the stem of the cane is "banked up" for a certain distance, to ensure its retaining as far as possible an erect position.

Weeding and Trashing.—Simultaneously with the moulding and banking, the land should be thoroughly weeded with a hoe. As the plants progress, "trashing" will also become necessary. This consists in removing from the stem every dry and fading leaf which has ceased to perform its functions. In rich land, it requires to be frequently resorted to during the wet season, but may be done at longer intervals when the rains are over. The importance of constant trashing cannot be too strongly insisted upon, as it admits to the plants that abundance of light and air which is absolutely essential to the production of a heavy crop of sugar. At the same time, green and living leaves must on no account be removed, as they form part of the vital system of the plant, and their destruction necessarily acts injuriously upon its development. Equally demanding removal when too numerous, are the suckers thrown up by the roots; yet among Louisiana planters they are encouraged. Both the leaves and suckers should be buried in trenches dug or ploughed between the cane rows, and covered over with a thin coating of earth; there they decay, and form excellent manure for the growing crop.

Ratooning.—In describing the operation known as "ratoon-

ing," it is necessary to refer the reader to the section on the propagation of the plant (pp. 68–70) and the illustrations relating thereto (Figs. 7, 8, 9). Bearing in mind the method in which the cane-cuttings put forth new shoots, it must now be explained that the first crop obtained from newly-planted cuttings is called "plant" canes; when these plant canes have been cut and carried, the stole or stool, remaining in the ground, in due course sends up another growth of canes, which are termed "ratoons." The first crop of ratoons (i.e. the second crop of canes from one planting) are designated "first ratoons," and the succeeding crops are numbered progressively in the same way.

It is found that ratoons annually diminish in length of joint and in circumference, the first being larger than the second, and so on. The roots of the buds, being fewer than in the original plant, and nearer to the surface of the earth, supply less nutriment to the ratoons, and the ground about them cannot be so effectually loosened and manured, as when the cane is freshly planted and the roots are deeper in the soil. These unfavourable circumstances attendant on the vegetation of the ratoons, limit their number, and retard the vigour of their growth.

On some soils, it is found best to depend chiefly on ratoons. A very general practice is to plant a certain proportion of the cane lands (commonly one-third) in annual succession. The stoles are allowed to continue in the ground, and as they become thin and impoverished, the vacant spaces are supplied with fresh plants. But if this method is adopted, great care must be taken to assist the development of the bud by judicious treatment. The earth round the stoles should be loosened, and cleared from weeds; and as soon as the ground has been refreshed by rain, the stoles should have manure placed round them, which, if covered with cane trash, to prevent its being dried up by the sun, will be found at the end of 3 or 4 months to be incorporated with the mould. At

this period, the ratoons should again be well dressed, after which very little care is requisite, until the canes are fit for cutting. Colonel Martin, of Antigua, advises, as soon as the canes are carried to the mill, to cut off, by a sharp hoe, all the heads of the cane stoles, 3 inches below the surface of the soil, and then to fill up the hole with fine mould; by this means, all the sprouts rising from below will derive more nutriment, and grow more equally and vigorously.

By the method of constant ratooning, the produce of sugar per acre, if not apparently equal to that from plant canes in newer soils, yields, perhaps, in the long run, quite as much profit to the grower, if the relative proportion of the labour and expense attending the two methods be taken into consideration. The very small average produce of sugar per acre (about 12 cwt.) in Jamaica is due to the system of permanent ratooning there prevailing, the plants that fail being replaced yearly one by one. The expenses are thus very small, and the risk of losing a field of young plants by drought is avoided, but the yearly yield is necessarily much curtailed, and a rotation of crops is rendered impossible.

As soon as the canes are cut, the land intended for ratoons requires the attention of the cultivator. If the rainy season be near at hand, all the field-trash, consisting of decayed leaves, should be buried with other manure about the roots of the plants, the earth around being well loosened and cleared of all weeds, either by the plough or hoe.

In some countries, such as Bengal, really good ratoons are never met with. In this case, first ratoons may be allowed; but it is an absolute loss of time, labour, and money to attempt second or third ratoons. It is also found that white ants swarm in the old roots of the ratoons, and do immense mischief to the growing canes; whereas when planted yearly, or even every second year, the good stirring up which the land receives goes far to break up their abodes, disturbing and destroying them. Constant ploughings, which include

the preparation of the land, and subsequent cleanings, mouldings, bankings, etc., have an excellent effect on these terrible enemies to the cane; and they have been known to vacate, in a great measure, land that had been continually disturbed by ploughing.

The cost of replanting land in India is so small, and the increased return so much greater, that Wray thinks no planter could hesitate a moment in deciding in its favour; especially as his great enemy, the white ant, is so much distressed, and the land so greatly improved, thereby. In British Guiana and some of the West Indies, it is held to be a good rule to replant when ratoons give only 1 to 1½ hhd. of sugar per acre.

In replanting, the old roots should all be burnt, and the cane-top cuttings be planted between the rows of the former crop, so that they do not occupy the same place as the old roots. When it is determined to allow the ratoons to continue for another crop, it will be advisable to cut down the banks and roots, so as to make the field quite level. This last can best be performed with sharp hoes, and when cleverly done, causes no injury whatever to the stools. Irrigation must be resorted to (as in the case of plant canes) throughout the hot season; and probably they may also require a liberal watering after the banks and roots are cut down, as it will have the effect of making them spring up again vigorously. This may be calculated on, if the former canes are cut in November or December, as the land is at that time generally pretty dry; but if a good shower falls in those months, the necessity of irrigation is removed.

Harvesting.—When the canes are ripe and ready for the harvest, they are cut with hatchets as close to the stole as possible; thus new vigour is given to the ratoons that are to spring from the old root, while the juice from these lower joints is the richest the cane contains. The top is discarded. It may perhaps be sufficient to cut off only one joint of the cane, with the cane top, from those canes which grow on

very dry soils; but otherwise, two should be cut, for if they be not sufficiently matured, their juice will only injure the sugar, instead of augmenting its quality All leaves are also stripped off.

Those canes which are rat-eaten, or otherwise damaged, must be sorted from the rest, and not be sent with the others to the mill, as they would probably sour the juice.

The canes, being cut, are tied into bundles for the convenience of taking them to the mill. On the mountains, they are carried by mules. In some parts, the bundles are rolled down the steep places, or shot down wooden spouts. In the plains, they are conveyed in carts, drawn by oxen, mules, or road engines, to enclosures near the mills; and in Guiana, in flat-bottomed boats or punts, by means of navigable trenches, which intersect the plantations for this purpose.

Figs. 10, 11, 12, and 13, obligingly furnished by W. Carrington, 72 Mark Lane, engineer to the owners of the wire tramway patents, illustrate the arrangement of a wire tramway for sugar-cane carriage, showing the cane being fed direct on to the cane traveller, as is done in many places; also the arrangement of three tramways driven at the mill, and radiating in different directions, delivering their cane on to the carrier of the mill.

These wire tramways have been largely and successfully used for sugar-cane carriage in the West Indies, Guatemala, Mauritius, and Queensland. In Mauritius alone, there are some 60 miles at work, where, on many estates, by means of this system, plantations on high grounds are utilised, which are beyond the reach of any other system of transport. The cane is carried in a crook, which is hung from the rope by the usual patent saddle, and travels with the rope at a speed of 3 miles per hour. The cane is put on to the tramway by means of a travelling shunt-stage, which is moved from end to end of the tramway, and on the shunt-rails of which the carriers run, from the rope, are loaded, and placed on the

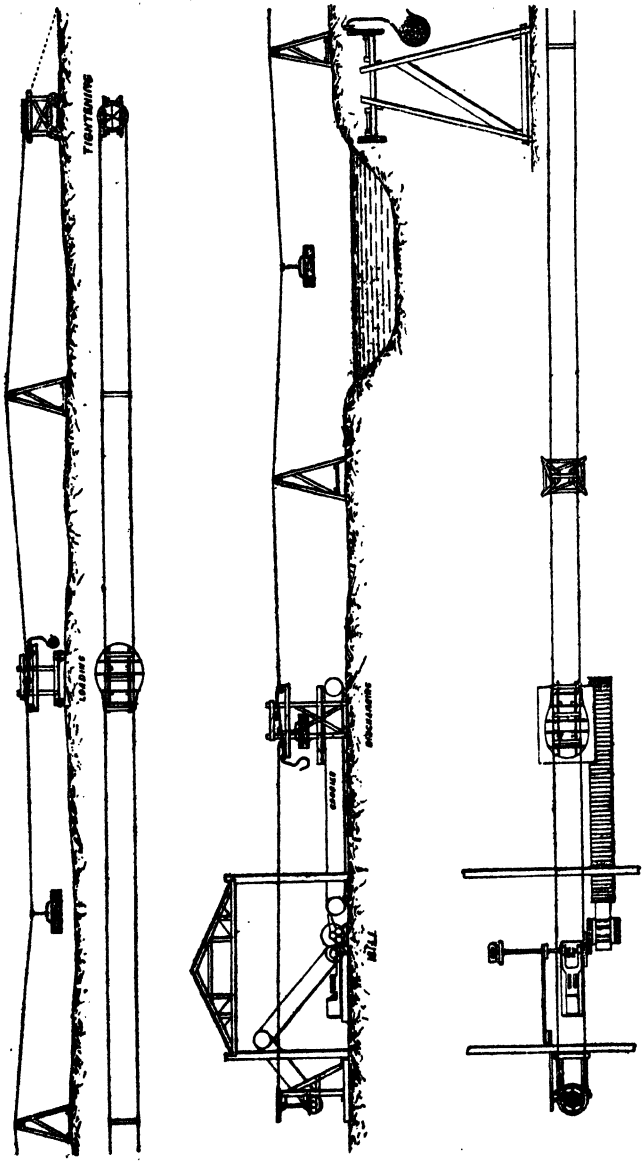

FIGS. 10, 11, 12.—WIRE TRAMWAYS.

return wire-rope to go to the mill with their load. Thus only the portion of the tramway rope between the mill and

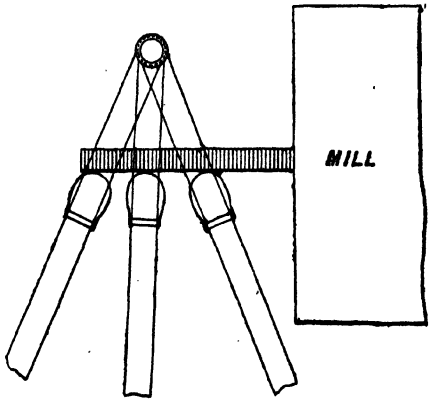

FIG. 13.—WIRE TRAMWAY.

movable shunt-stage is employed in carrying the loads. When necessary, the terminal of the tramway can be mounted on

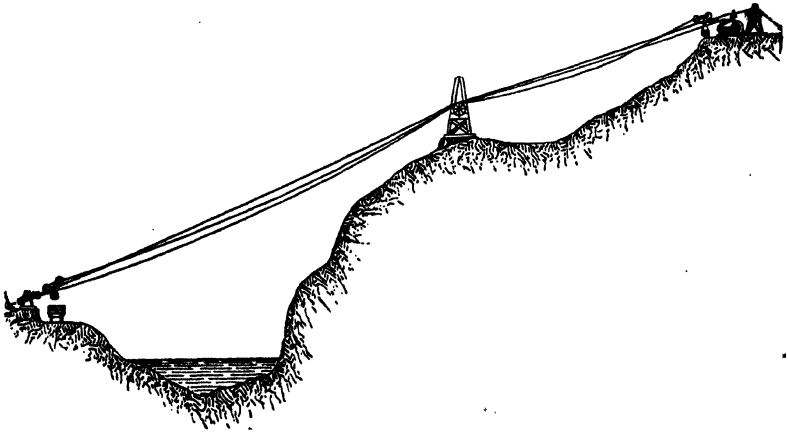

FIG. 14.—WIRE TRAMWAYS.

wheels, and the driving gear arranged to allow the tramway to radiate to any portion of a circle, so as practically to reach any point of a field.

The wire tramway presents great advantages in being able to cross any rivers or dykes in the plantation, or between it and the mill; it can also ascend or descend inclines as steep as 1 in 3, and can thus easily reach any spot of an estate, however inaccessible to other systems. Its use does not damage the ground over which it runs by compressing it and rendering it bad for cultivation next year. Another advantage is found in its providing a regular continuous feed of freshly-cut cane to the carrier, never making accumulations of cane outside the mill, but being easily regulated to deliver exactly the quantity which the mill can take.

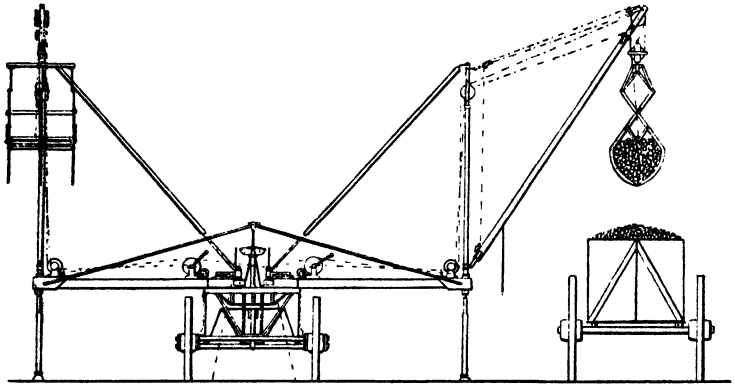

FIG. 15.—HOWARD'S SUGAR CANE LOADER.

The posts are either made, as shown, of timber, or are a portable form of iron post, which is light, and easily moved about and regulated as to height.

These wire tramways can be made to carry from 50 to 500 tons per 10 hours, and can be constructed for from 200*l.* upwards per mile, including all machinery and rolling stock.

Fig. 14 shows the arrangement adopted when the country is much broken.

Many devices have been suggested for facilitating the loading of wagons or trucks with cane. Of these, one of the

best known is the invention of Mr. T. J. Howard figured in Fig. 15.

The method of working is as follows: The cane having been previously cut and laid or piled in rows, say three rows into one, the sugar-cane loader will then occupy the vacant row between the two heap rows, whilst a cart or waggon on each side of the cane loader occupy the next vacant rows, or in other words, each first off vacant row. The grapple of the loader on each side is lowered to the ground by the operator, who occupies the driver's seat, and releases the hand levers, one of which is situated on each side of the seat. When the grapples are low enough, they are to be placed over the sugar-cane where desired by the man at the grapple. When ready to elevate the cane, the cable in the rear of the loader is drawn on by horse or mule power, and when the grapple is high enough to clear the top of the cart or waggon, it is swung over the same, the grapple released by clutching the load with the clutch wheel and slackening the elevating cable, which by arrangement releases the loads and drops the cane into the waggon or cart as desired. This operation can be repeated until about forty feet of cane has been loaded on each side before moving the loader or the cane waggons.

The loader is so constructed that one or two carts can be loaded at the same time, and it will also grasp the cane in front of or behind the standard, or post, which is opposite the row of cane. It takes three men, two boys and two horses to work the machine during loading operations.

Windrowing.—In some countries, frost greatly interferes with the progress of the harvest. The ill effects of frost and subsequent thaw upon the cane-juice, have been already alluded to (see p. 28). To such a degree is this evil felt in Louisiana, that special precautions are there needed, and have resulted in the adoption of a method of keeping the cut canes uninjured, which has been termed "windrowing." This method will now receive attention.

The usual method of windrowing is by throwing into one furrow from 2 to 4 rows of cane, in such position that the tops of the last thrown down will always cover the butts of the preceding. This plan will do well enough for protection against frost while the cane is waiting to go to the mill; but seed cane should never be windrowed in so careless a manner, as is almost universally done, with only the addition of a furrow of dirt thrown on from each side. The proper way to windrow cane for seed is *first* to throw to the centre of the water-furrow 1 or 2 furrows of dirt from each side; a harrow is then run over that, so as to pulverise it thoroughly, and give the cane a soft bed to lie on; and the bed is made of such an elevation that the cane cannot be injured by water standing upon it during the wet winter months. Upon the cane, 2 to 4 more furrows of dirt are thrown, to protect it from the cold. Of course it is very difficult to plough and harrow between rows of heavy cane, but the importance of keeping seed cane in a sound condition justifies all the time necessary for this method; and if the cane is crooked, or otherwise interferes with the team passing between the rows, a sufficient quantity of the cane may be cut away to make room. In this way, there is no difficulty in keeping seed cane.

There are strong arguments in favour of "round mats," or standing the canes upon their butts on a dry piece of land, and throwing dirt around the outside to the height of 3 or 4 feet. The cane from about half an acre is usually put in each mat. This method, however, is but little used. The addition of a square wooden tube, running up through the centre for ventilation, prevents dry rot. The "flat-mat" method of preserving seed (laying down as in windrowing, in beds about 15 feet wide, on elevated ground, to the depth of 2 to 4 feet, then lightly covered with earth) is much more common and popular; but either round or flat mats require more time than most planters are willing to give. The losses of seed cane might be so easily prevented by the plan of

elevating the ground upon which it is to lie in windrow, that when once known it will doubtless be generally adopted.

Diseases and Enemies.—Like every other growth, whether vegetable or animal, the sugar-cane is subject to attack from various enemies and diseases. Some of these are common to the wild cane and cultivated cane, but others are so conspicuously developed upon the latter alone, that there can be no room for doubting that they have originated in defective systems of culture, improper or insufficient manuring, or unsuitable conditions of climate or soil. Diseases of this latter and most serious kind can only be combated by removing the cause, whatever that may prove to be.

Rats.—Rats are most troublesome pests to the cane-planter, as they gnaw the standing canes, thereby admitting air to the interior of the plant, and permitting the entry of germs which set up fermentation and other destructive changes in the juice. For many years these pests were a source of considerable loss and expense to cane-planters, not only in Jamaica, but in the West Indian Islands generally, and it was not until Mr. William Bancroft Espeut, of Spring Garden Estate, Portland, imported direct from India that useful animal the mongoose (*Herpestes ichneumon*) in the year 1872, that planters were successful in destroying the rapacious "cane-piece rat," and reducing the expenses of rat-catching in all its phases.

The introduction and complete naturalisation of an animal possessing such strong predatory habits and remarkable powers of reproduction as the mongoose, must have an important influence on all indigenous and introduced animals capable of being affected by it. As is well known, the mongoose, although resembling a weasel in form, belongs to the civet-cat family (*Viverridæ*), and its disposition is as sanguinary as its habits are predatory. Its natural food consists of birds, snakes, lizards, rats, mice, and last but not least, the eggs of both birds and reptiles. In India, the destruction

which it often causes amongst poultry is well compensated by the incessant war which it wages against snakes and vermin. Even the lethal cobra falls a victim to the agility of the mongoose, which, according to Eastern tradition, is said to possess an antidote, by means of which it can withstand the venom of the most deadly reptile.

Ants.—In some localities, white ants are a great nuisance. Their antipathy for petroleum is so great that tops or cuttings soaked for a few minutes in water tainted with petroleum will never be attacked by them. Where the soil is impregnated with petroleum, white ants are unknown.

Pou blanc.—One of the greatest scourges of the sugar-planter is the *pou blanc*, or more properly, *pou à poche blanche*, a collective name applied to two species of "louse," scientifically known as *Icerya sacchari* and *Pulvinaria gasteralpha.* The ravages of these insects are sufficiently familiar to the planters of Mauritius and Bourbon, and specimens of one of these species have been discovered in Queensland, upon canes grown from joints imported from Singapore.

In dry and hot weather, these insects frequent the roots of the canes, and do much injury to the fresh rootlets, thereby greatly retarding the growth of the plants. The young insects are very active, and run about on the green shoots and leaves until they find a suitable spot where they may fix themselves for life. They are armed with a sharp probe as long as the body, which they introduce into the new sap-wood, and suck away the juices of the plant, sometimes till they have quite destroyed it.

These insects spread very rapidly, and are exceedingly tenacious of life, notwithstanding the greatest extremes of temperature. Dr. Icery, who studied them in Mauritius, found that washing the canes with alcohol killed the insects at once, and he further recommends a solution formed by boiling a mixture of sulphur and lime in water. It should be borne in mind, however, that the insects rarely appear on healthy

and well-developed canes, and though these remedies may prove useful for checking their ravages for the moment, complete extermination of the pests will only be secured by proper attention to all the conditions required by the plants.

W. Bancroft Espeut, of Spring Gardens, Jamaica, believed that the "rust" described further on (p. 94) is caused by these insects, being in fact abrasions produced by the young feeding on the surfaces of the leaves. The "waxy" powder, which is usually described as coating the fully-matured insects, is ascribed by this writer to the saccharine juice of the cane, and he states that it does not seem to appear until the insects attack the cane itself, extracting the sweet sap, and exuding the sugar in a liquid or crystalline form from orifices in their skins. It is this exudation which forms the great attraction to the ants, in quest of which they scrape the lice incessantly with their mandibles. Pike even asserts that the ants tickle the lice with their forefeet while feeding, and cause the latter to disgorge what they have imbibed (which the ants then greedily devour), till they die of starvation. In any case, ants are the great natural enemy of the lice.

Borers.—The term "borer" is applied generically to the caterpillars or "grubs" of a number of species of moths, beetles, and other insects; they are sometimes (especially in America) also called "worms," which is a misleading name, from its being correctly and more generally applied to a distinct class (*Vermes*).

One of the most common species is *Proceras Sacchariphagus*, long dreaded in Ceylon, and the cause of great destruction of cane plantations in Mauritius, since its introduction there in 1848. Two kinds common in British Guiana are *Sphenophorus sacchari* and the *tacuma*, a large species of *Rhyncophorus*, very like *R. Zimmermanni*, but not identical with it. Another Guiana species is *Phalæna saccharalis*, which produces six generation is a year. The grub of a beetle (*Tomarus bituberculatus*) also has recently given much trouble in that colony.

These are all well-known forms, and the list might be greatly extended; in fact, many species doubtless still remain undescribed and unrecognised.

The shot-borer (*Zyleborus perforans*), so named from the clean shot-hole-like borings in the cane, was first described by Mr. T. V. Wollaston as doing much mischief by feeding on the bungs of casks in wine stores in Funchal, Madeira. Of all the cane-borers hitherto met with, this little beetle seems to be the worst, for it leads to a condition of the cane described as "rotten"; while, on account of its minute size (it varies from about $\frac{1}{10}$ to $\frac{1}{16}$ of an inch in length), it is impossible to detect its presence in the canes until great damage has been done, and at the same time it is particularly difficult to deal with. The best plan to mitigate its ravages is to cut, crush, and burn the residues of canes in which the insects are found. Diseased cane, or cane which, from any circumstance, has acquired the peculiar rancid smell which appears attractive, or pieces of cane infested by the moth-borer (*Diatræa saccharalis*), which are certainly attractive, if proving successful as "traps," might be removed at short intervals, with the contained insect vermin, and destroyed. The impression that the beetle only attacks canes infested by the moth does not appear to be well founded, canes from Barbados having shown tunnelings of the beetle and the presence of the pest in every stage of development, but not a sign of any other attack.

Professor R. L. C. Perkins found the following beetles among the canes in Hawaii: The cane-borer (*Sphenophorus obsecurus*), most injurious when in numbers; the long-horned beetle (*Aegosoma reflexum*) only attacks canes incidentally, its natural food being decaying wood of forest trees; the small borer (*Hypothonemus sp.?*), belonging to the same group as the shot-borer of the West Indies, only observed so far in refuse cane.

The moth borer is largely kept down in Java by a minute wasp, *Chaetosticha*, which destroys the eggs of the moth by

breeding in them, and a fungus, *Isaria Barberi*, attacks the caterpillars in the West Indies, and a similar form of "vegetable caterpillar" has been noted in Java.

Further investigations into the number of species, their life histories, and natural parasites, will be very welcome, as indicating measures for their eradication. Meantime it may be stated that the habits of the grubs appear to be pretty nearly identical in all cases. They are provided with powerful mandibles, and their mouths are armed with lance-like instruments, which enable them to pierce the silicious (flinty) outer rind of the cane. Once within the soft juicy mass of the interior of the cane, their voracity leads them to effect its destruction with extreme rapidity. Figs. 16 and 17, reproduced from Nicholas Pike's interesting volume on Mauritius, give a typical illustration of canes attacked by this class of pest. Not only is the plant destroyed, but the juice is rendered useless for manufacturing purposes. The pupal or chrysalis stage is seen at *a*, the larva, maggot, grub, or caterpillar appears at *b*, and the perfect butterfly or imago is represented at *c*.

Among the means to be adopted in checking the ravages of these insects, are to be mentioned the encouragement and cultivation of their natural enemies. Principal among these latter are ants, which attack the insects both in their caterpillar state, whether just issued from the eggs or about to enter the pupal condition (commencing to spin their cocoons), and in their perfect or imago form, i.e. as moths or beetles. Turkeys and the smaller insectivorous birds devour enormous numbers of the grubs (caterpillars). Success has attended cultivating other natural enemies of these noxious insects, to be found in the Ichneumon flies, etc. The plan is to plant a hedge of the Congo or pigeon pea (*Cajanus indicus*) around each field, and to grow the bona-vist bean (*Dolichos Lablab*) and the pigeon pea on all fallow fields, ploughing in this latter growth as a green-soil manure (see Green-soiling, p. 48) afterwards.

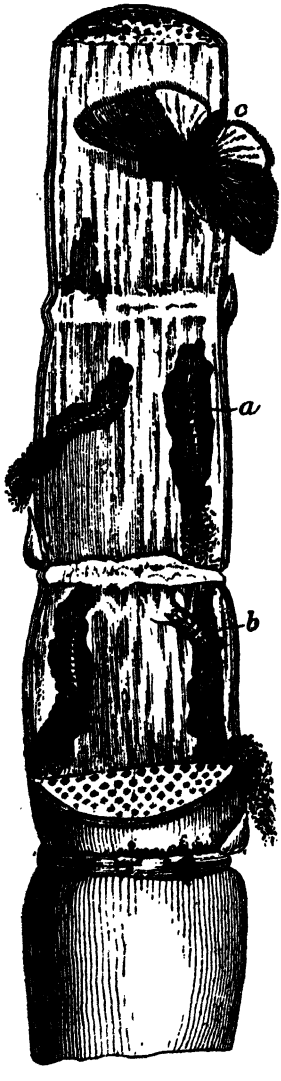

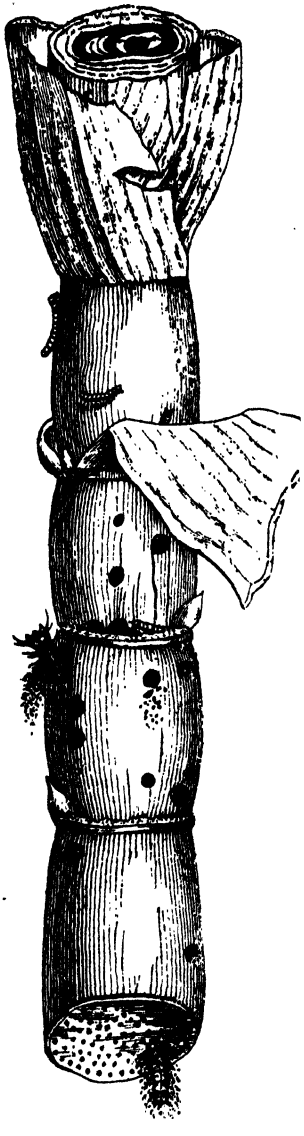

FIGS. 16 AND 17.—CANE ATTACKED BY BORER.

Many and varied are the other methods attempted for counteracting the ravages of these troublesome caterpillars. When the estate is quite overrun with them, it may be necessary to burn every atom of vegetable matter about the plantation, such as the begass, cane-tops, leaves, and other matters likely to harbour them. But this is an extreme measure, and should be avoided if possible, as it entails the destruction of the best manure the land can have (see p. 45). The abundant application of lime to the soil will generally be found very beneficial in destroying the insects, besides its manurial value (see p. 36).

A widely-adopted plan is to cut off and burn the first shoots that spring from the planted cane-cuttings. These are allowed to grow for about three months, by which time the grubs will have congregated on them. The shoots are then cut close to the ground, piled in heaps, and burned. The second crop of shoots soon appears, and the skins of these latter are said to be much tougher, and better able to resist the attacks of the grubs which may have escaped the burning. This plan is often supplemented by sending labourers to destroy all the caterpillars they can find on the second growth of canes.

These modes of checking the progress of the insects when once they are found upon an estate are all worthy of the greatest attention; but it is equally important not to overlook preventive measures. It is beyond doubt that not only borers but many other injurious insects are propagated on the canes year after year. Hidden in the cane-tops are the chrysalides of the insects, which in due course are transformed into moths and butterflies, whose eggs supply a new swarm of caterpillars and grubs, and thus the evil is constantly maintained.

Obviously, therefore, great good may be gained by ridding the cane-tops of all vermin, whether in a perfect or imperfect state, before planting. A very simple plan is to soak the cuttings for 24 hours in water which is sufficiently hot to

destroy the larvæ which may be infesting it, without being hot enough to injure the germinating powers of the plant. A more effective remedy is the use of antiseptic preparations, as they attack parasitic growths which would be unaffected by mere warm water.

Pike alluded to the use of carbolic acid (called also phenol, phenylic acid, and phenylic alcohol) for this purpose in Mauritius in 1873, but he omitted to give any figures as a guide. Dr. Bancroft, in Queensland, has more recently published exact directions for a treatment which he has adopted with complete success: it is as follows: (1) Clean the joints of the cuttings entirely from trash (leaves) as carefully as possible; (2) immerse the cuttings for 24 hours in a mixture of 1 lb. of carbolic acid to 50 gallons of water, the water being heated to a degree that the hand can bear; (3) immerse the cuttings for a few minutes in a milk of lime, made by mixing 2 lb. of slaked lime with 1 gallon of water; (4) spread the cuttings out to dry in the sun, and turn them occasionally, for one day before planting.

Rust.—From Queensland, there has been a great outcry concerning the mischief caused by a disease in the cane, and which has been termed "rust." It seems to be the same that has been noticed in the Malay Archipelago, Mauritius, the Society Islands, and Bahia. The disease is characterised by a dark-brown or reddish granular incrustation, which makes its appearance on the leaves and stem. It has been attributed to numerous kinds of insect and fungus; but R. M'Lachlan, F.R.S., has finally determined it to be due to the punctures of a minute *Acarus* (mite), which exists upon the diseased cane in myriads. The exact species has not been made out satisfactorily, but the creature is stated to look very like a *Tyroglyphus*, though its habits do not altogether accord with those of that genus. A black-spored fungus is eventually produced by the red spots on the leaves; this is regarded by M. J. Berkeley as a new species, to which he has given the

name *Depazea sacchari.* He does not consider that it plays any part in the disease, but merely occupies the already destroyed tissues. The Bourbon canes suffered much more than any other variety.

Prof. A. Liversedge, of Sydney University, made this disease the subject of prolonged study on the estates where it was actually in existence, and issued an exhaustive report of his investigations. In summing up the results of his observations, he concludes that the so-called "rust" is not to be considered as a disease in itself, but rather as a result of an existing diseased condition of the plants. This diseased condition he ascribes to bad cultivation, want of drainage, and improper manuring, to which must be added in some instances unsuitability of climate, and poverty of soil. His advice to the Australian planters exactly coincides with what has been stated in the foregoing sections of the present chapter of this book. Give the plant an opportunity of thriving, provide it with the food and air which are essential to its development, and it will grow healthy and strong. There is no disease but what is caused directly or indirectly by withholding from the plant those conditions which its nature demands; and though the evil may be temporarily checked by the means thus described, the only real and permanent cure lies in a proper system of agriculture.

Sereh.—A disease of the sugar-cane widely spread in Java is "sereh," a word derived either from the Javan, ngêré, to degenerate, or, more probably, from sereh, the Javan name of the lemon-grass (*Andropogon schœnanthus*), the bushy form of which the cane resembles in certain stages of the disease, owing to the shortening of the nodes and the undue development of the lateral buds, which, in a healthy state, remain flat and dormant. No particular symptom can be said to be specially characteristic of this malady, as the appearances vary with the virulence of the attack and other diseases simultaneously affecting the cane.

The more general symptoms are a shortening of the internodes of the stem, so that the plant becomes stunted and the leaves crowded together, and marked with yellowish-green bands; a weakened development of the roots, a tendency to arrow, and a disorganisation of the tissues, especially of the fibro-vascular bundles, with formation of a resinous or gummy matter, fluid at first, but becoming solid and blocking up the vessels, especially at the nodes. Cuttings soon rot in the ground, and have an unpleasant odour and a red colour.

The causes of the disease are an unfavourable condition of the soil; degeneration or atavism, due to prolonged asexual propagation, or bad choice of cuttings, especially tops; abnormal weather conditions, unsuitable manuring, particularly with earth-nut cakes, faulty planting, want of water, and the attacks of animal and vegetable parasites.

Kruger states that the sereh disease is apparently a malady of the vascular system of the cane, caused by bacteria, in which there occurs a separation of resin or gum, commencing at the nodes and lower part of the leaves, whereby the vessels are stopped up and the tissues killed, the vessels being unable to discharge their functions. According to Went, sereh is caused by a combination of a leaf-sheath disease, due to a fungus *Hypocrea* (*Verticillium*) *sacchari*, and a root disease, bacteria being only incidentally present.

Gumming.—The gumming disease is known in Brazil and Australia, and is spoken of in confusion with the "sereh disease" in Java, and also in Mauritius, but it is not conclusive that it exists in the latter countries. The Australian disease is readily distinguished by the exudation from cut surfaces of a clear yellow mucilage, which leaves a bright stain on drying. Dr. Cobb, who has studied the disease in Queensland and New South Wales, concludes that it is due to the action of a bacillus (*Bacillus vascularum*). Dr. Maxwell's opinion, however, is that the conditions surrounding the local cases of the

greatest virulence indicate that the cause discovered and amply defined by Dr. Cobb may be a secondary cause.

When gummed cane-seed is planted in virgin soil, the crop is highly subject to gum, and when seed free from gum is planted in soil that has produced gummed cane, the crop is equally liable to gum. Amongst measures to be taken to resist and oust the disease, the two primary ones are, first, a thorough fallowing of the infected lands, and an absolutely reliable system of selection of the cane, such as will furnish security against the use of gummed seed. The disease, however, in some measure similar to the occurrence and ravages of the grub and other troubles, is bound up with the consideration of the causes of the falling off in yields. Quite certainly, any remedial steps taken for the rebuilding up of the producing power of the soil and of the vitality of the cane will also be actions begun for the resistance and removal of pests and diseases.

Grub.—In ratoons, and especially those that have been in the ground several years, the old roots are infested with the grub pest, although it is only occasionally found at the roots of plant canes. Its confusion with cases of gumming are due to the two diseases working together. Dr. Maxwell, speaking of Queensland, states that continuous ratooning for successive years, and the dead condition and fouling of the soil, which after one or two crops it involves, provides all the most favourable conditions for the propagation of the grub, and furnishes another powerful reason for the introduction of a more rational and thorough system of cultivation.

Rind Fungus.—The rind disease of the sugar-cane in the West Indies is identical with the "red smut" disease of Java, and is caused by the fungus *Colletotrichum falcatum* (Went). It can infect ripening canes at wounds and at old leaf-bases, and can overcome the tissues of young canes. The *Melanconium* found on diseased canes in the West Indies is a saprophyte, and is not the cause of the rind disease. It infects canes

easily at points where they have been invaded by the *Colletotrichum.* The best remedial and preventive measures are the destruction by burning of the diseased canes at reaping time, stripping the growing canes, planting only from the best cuttings, and controlling the boring insects.

Pine-apple disease, or black-rot, occurs in half-developed canes. It is caused by a fungus, *Thielaviopsis ethaceticus* (Went), and gives a black or carmine colour to the internal tissues of the stem.

Nematodes.—Among the parasites which attack the roots may be mentioned the nematode *Heterodera radicicola*, so inimical to beetroots.

Smut.—In Natal the canes are attacked by a kind of "smut," called *Ustilago sacchari*, which is analogous to the well-known disease that affects the cereals of this country, and is entirely due to faulty cultivation.

Yields of Canes and Sugar. — Though the statistics of the cane and sugar production of any one estate or district cannot be taken as affording an index to the capabilities of any other estate or district, on account of the varying conditions necessarily existing, much information of a comparative nature may still be gained by placing such details in a collective form, and they will be useful for reference in drawing conclusions as to the results of new processes and their superiority or otherwise to older plans. They will be most readily consulted in a tabular form.

BARBADOS :—

1 foot of sugar-cane weighs about ¾ lb.
1 clump ,, ,, ,, 54 lb.
1 ,, ,, yields ,, 4 gal. of juice.
4 gal. of juice ,, ,, 4 lb. of muscovado sugar.
1 acre ripe cane (holes 6 ft. × 5 ft.) yields 1452 clumps.
1452 clumps of cane yield about 5808 gal. of juice.
5808 gal. of juice ,, ,, 5808 lb. of sugar.
1 acre, planted 6 ft. × 5 ft., at 50 lb. to the clump, will give 72,600 lb. or 36 tons of ripe cut cane, or 2½ tons of raw sugar.

LOUISIANA:—

1 acre yields from 44,000 lb. to 60,000 lb. of cane.

The average cost per 2200 lb. is 2½ to 5 dollars.

The density of the juice varies from 6° to 10° B., and averages 8° to 8½° B.; 8° B. is equal to 14·4 lb. of pure sugar per 100 lb. of juice, or 2·96 lb. of sugar for the 90 lb. of juice, contained in 100 lb. of canes: 8½° B. would mean 15·33 per cent. of pure dry sugar.

1240 gal. of juice at 8½° B. produce 1048 lb. of sugar, and 480 lb. of molasses; with the best modern machinery, more sugar and less molasses are got.

1 gal. of juice at 8½° B. weighs 10·62 lb.

1240 gal. ,, ,, 13,169 lb.

100 lb. of cane contain 90 lb. of juice.

12,345 lb. of cane yield 11,111 lb. of juice.

11,111 lb. of juice at 8½° B. should give 1700 lb. of sugar.

The actual yield of combined sugar and molasses is 14·89 per cent.

11,111 lb. of juice therefore afford 1655 lb. of sugar and molasses.

Of the 1655 lb., 1173 lb. are sugar, and 482 lb. molasses.

Thus 427 lb. of sugar and molasses are lost in the manufacture.

11·8 lb. of cane give 1 lb. of sugar and 0·48 lb. of molasses.

10·5 lb. of cane would have given 1 lb. of sugar and 0·66 lb. of molasses, if no loss had occurred.

7·26 lb. of cane would give 1 lb. of sugar, if there were no loss, and no molasses produced.

1 acre will grow from 13,000 to 45,000 canes.

The length of the canes varies from 3 to 8 ft.

,, weight ,, averages 10 oz. per ft.

Canes 4½ ft. long, weighing 3 lb. each, and gro wing 350 per row of 100 t will give 61,125 lb. of canes per acre.

Planters require 35 to 55 lb. of cane to make 1 lb. of sugar and 0·66 lb. of molasses.

The average for the State is 2·25 lb. of sugar and 1·50 lb. of molasses from 100 lb. of cane.

Thus 100 acres give 6,000,000 lb. of cane, affording 135,000 lb. of sugar and 90,000 lb. of molasses.

But 6,000,000 lb. of cane, if no loss occurs in manufacture, can give 571,428 lb. of sugar, and 380,952 lb. of molasses.

And if made into firsts, seconds, etc., sugars, could yield 750,000 lb. of white sugar, and 140,000 lb. of molasses.

While the same cane would make 867,510 lb. of concrete sugar.

MAURITIUS:—

1 barrel of cane-juice weighs 530 to 544 lb.

1 ,, ,, yields about 95 lb. of sugar.

1 acre of cane produces 3500 to 5500 lb. of sugar.

EGYPT:—

The average plantings of the fellahs in Upper Egypt yield about 22 tons per acre in the first year, and 9 tons per acre in the second.

The percentage of sucrose in the cane varies, according to the year, from 10·5 to 13·9 in the first year cane, and from 12·0 to 14·0 in second year cane.

QUEENSLAND :—

1 acre of cane affords on an average 2·3 tons of sugar and 570 lb. of molasses.

1 ton of cane, representing 1993 lb. of juice, contains 312 lb. of cane sugar, and the resulting molasses contains 32·1 lb. of sugar, or 10·2 per cent. of the total sugar.

The average maceration varies from 45 per cent. with an extraction of 91·9 per cent. to a maceration of about 75 per cent., and an extraction of 94 to 97 per cent. of the sugar.

The average quality of the juice is a sugar content of 15·7 per cent., and a purity of 88·7.

The waste molasses is equal to 6·1 gal. per ton of cane, or about 55 gal. per ton of 88 N.T. sugar.

The average sugar content of the waste molasses is 40·6 per cent. with a purity of 48·7.

SANDWICH ISLANDS :—

The average sugar content of the juice is 17 per cent., with a purity of 89.

The average production of molasses per ton of sugar is 27 gal., or 4 gal. per ton of cane.

The average sugar content of the molasses is 34 per cent., with a purity of 46·0.

1 ton of cane contains 339 lb. of sugar ; the weight of molasses therefrom is 17·8 lb., or a loss of 5·2 per cent. of the sugar.

JUICE FROM 100 LB. OF CANE :—

100 lb. of cane giving juice at 10° B. will yield

	4·714	gal.	of juice at	50	per cent.	extraction.
,,	5·185	,,	,,	55	,,	,,
,,	5·657	,,	,,	60	,,	,,
,,	6·128	,,	,,	65	,,	,,
,,	6·600	,,	,,	70	,,	,,
,,	7·071	,,	,,	75	,,	,,
,,	7·543	,,	,,	80	,,	,,
,,	8·015	,,	,,	85	,,	,,
,,	8·486	,,	,,	90	,,	,,
,,	8·958	,,	,,	95	,,	,,
,,	9·430	,,	,,	100	,,	,,

The *Revista Azucarera* gives the following list of the sugar campaigns in various countries of the world : Argentina, 6–10 (June to October) ; Australia, 6–11 ; Brazil, 10–2 ; Cuba, 12–6 ; Demerara, 10–3 ; Egypt, 1–4 ; British East Indies, 12–4 ; Guadeloupe, 1–6 ; Hawaii, 12–4 ; Jamaica, 12–4 ; Java, 5–11 ; Lesser Antilles, 1–7 ; Louisiana, 9–1 ; Martinique, 1–7 ; Mauritius, 8–1 ; Mexico, 12–5 ; Peru, 10–2 ; Philippines, 9–3 ; Porto Rico, 1–6 ; Queensland, 6–11 ; Réunion, 9–1.

CHAPTER II.

COMPOSITION OF THE JUICE.

BEFORE leading the reader into the volumes of argument concerning the best method of making sugar and minutely detailing the differences of the many processes and apparatus, it will be necessary to make him thoroughly acquainted with the nature and characters of that cane-juice from which the sugar has to be obtained.

Among the many chemists who have studied this subject, the name of Dr. Icery of Mauritius stands pre-eminent, and it is to him chiefly that our knowledge of the composition and characters of sugar-cane juice is due.

Mention has already been made (p. 15) of the structure of the sugar-cane, and the form of its cells have been shown in Fig. 16 (p. 92). Within these cells is contained a sweet watery juice, a sugar-water holding a variable quantity of organic and mineral matters in solution. This is the juice which is extracted from the canes for the purpose of being made to yield its sugar. The nature of the ingredients composing cane-juice is not, under ordinary conditions, liable to variation; the proportions of these ingredients, on the other hand, fluctuate with the soil and climate, the age of the cane, the portion of the cane affording the juice, and other circumstances. Consequently in giving analyses of average samples the figures can only be taken as approximate.

Dr. Icery states the average composition of the juice of ripe Mauritius canes as:—

Water	81·00 per cent.
Sugar	18·36 ,,
Mineral salts	0·29 ,,
Organic substances	0·35 ,,

R. H. Harland has stated the composition of some cane-juices examined by him which were expressed from canes grown in the Mary district, Queensland, to be as follows :—

	Guinghan Cane	China Cane	Mixed Canes
Density at 15½° C. (60° F.)	11·5° B.	10·5° B.	11·6° B.
	per cent.	per cent.	per cent.
Crystallisable sugar	19·50	16·40	18·30
Uncrystallisable ,, ...	0·25	0·41	0·45
Ash (soluble salts)	0·70	1·11	0·37
Other organic matters	1·17	2·51	3·14
Total solid matters	21·62	20·43	22·26

The same author gives the composition of a juice from the Taal district of the Philippine Islands :—

Crystallisable sugar	18·30	per cent.
Uncrystallisable ,, ...	0·10	,,
Ash	0·30	,,
Other organic matters ..	3·25	,,
Total solid matters	21·95	

He also examined the juice of several samples of unripe cane, whose constituents proved to be :—

	I.	II.	III.
	per cent.	per cent.	per cent.
Crystallisable sugar	8·60	7·76	7·24
Uncrystallisable ,, ...	3·10	2·30	2·50
Ash (soluble salts)	0·21	0·25	0·34
Unknown organic matters	1·27	1·74	2·89
Total solid matters	13·18	12·05	12·97

Shorey gives as an average composition of cane-juice in Hawaii :—

Brix	19·62°	
Sugar	17·38	per cent.
Glucose	0·32	,,
Non-sugar	1·92	,,
Purity	88·6	,,
Glucose quotient	1·84	,,

It may be said, in general terms, that cane-juice consists of about 81 per cent. of water, 18 of sugar, 0·6 of organic matters, and 0·4 of inorganic (mineral) matters; and further, that about 0·5 to 0·6 per cent. of the sugar in the juice of ripe canes (it is much greater in unripe ones, as shown above) is uncrystallisable.

These several substances are very intimately combined in the juice of the cane, but Dr. Icery has shown that the juice is not of one constant quality throughout the whole of even the same cane. The fact is indeed recognised by planters, since they cut off and reject the tops of the canes before extracting the juice. Further, it is to be noted that the juices contained in the soft central or medullary part of the cane are much richer in sugar than those of the nodular portion (the knots), or of the cortical portion (the rind). Dr. Icery experimented upon canes divided in such a way as to be able to separately express the juice from the soft interior, the outer rind (roughly detached, and carrying some of the inner portion), and the knots, with the following results as to the juice and sugar produced :—

	Interior	Rind	Knots
Density of juice at 25° C. (77° F.) ..	1·082	1·074	1·069
Sugar, per cent.	18·4	17·9	17·1

Conversely, it is found that the saline and organic matters are in increasing proportion in the harder parts of the cane. These are very important facts. The most saccharine (sugar-yielding) juice resides in the softest portions of the cane, and is therefore most easily extracted; when an extra yield of juice is obtained by the exhaustion of the harder portions, the quantity is at the expense of the quality. The fact has an obvious bearing upon the question of the relative advantages of those mills which extract only 60 per cent. and those which get out up to 85 per cent. of 90 per cent. of juice usually present in the cane.

It is now necessary to devote some space to a separate consideration of each component part (or group) of the raw juice, viz. the crystallisable and the uncrystallisable sugar, the mineral matters, and the organic matters.

The Crystallisable and Uncrystallisable Sugar.—It is assumed that the reader has already made himself acquainted with the nature and properties of the various kinds of sugar, as described in the Introduction to this volume, and that he is quite familiar with the exact meaning conveyed by the terms crystallisable and uncrystallisable sugar. That being so, it is hardly necessary to remind him that crystallisable sugar is the one article which it is his object to procure, and that the uncrystallisable product is the thing to be avoided.

The relations between the two kinds of sugar are but little understood, and the artificial conversion of uncrystallisable into crystallisable sugar remains an impossibility, though the latter can be "inverted" into the former readily enough. From some experiments made by Harland, while in the Philippine Islands, it would seem that in the growing or ripening plant a conversion of uncrystallisable into crystallisable sugar does take place, the proportion of the former being markedly decreased in the juice of canes expressed 8 days after the cutting. The occurrence of uncrystallisable sugar in the juice of the cane in a natural unchanged state was long disputed; but Dr. Icery and other modern chemists have conclusively shown that it is present at all stages, being in least quantity (about ½ per cent. of the juice) in sound ripe canes, and notably increasing in unripe ones and those which have suffered any degree of fermentation.

The presence of uncrystallisable sugar works a twofold mischief. In the first place, the uncrystallisable sugar is itself a loss: that is to say, it has no value as sugar; and in the second place, the existence of this uncrystallisable sugar in the syrup so affects the remainder as to greatly hinder, if not

absolutely prevent, the recovery of an equal quantity of the still unaltered crystallisable sugar in a saleable form. The reason of this lies in the fact that the liquid containing the altered sugar has a treacly consistence, and cannot be conveniently deprived of its water by evaporation to such a degree as will leave the unaltered sugar in a saturated solution capable of clean crystallisation on cooling. Practically, therefore, it may be said in round numbers that every 1 lb. of sugar rendered uncrystallisable in a syrup entails an actual loss of 2 lb. of crystallisable sugar.

The chief cause of the alteration in sugar is the fermentation of the juice, or rather of certain constituents of the juice, viz. the organic matters other than the sugar. The conditions essential to this fermentation taking place are mainly the access of air to the juice, and the prevalence of a moderately high temperature. These are the natural conditions: consequently fermentation may (and does) begin in the still living cane, when injuries (such as the gnawing by rats) admit air into the cells. Artificially, fermentation is set up in the juice the moment the latter is extracted from the cane, and it is maintained by the heat necessary for carrying on the various processes of manufacture, increasing in proportion to the duration of the processes and to the degree of heat applied. Acids also provoke fermentation; they are nearly always present in a free state in the juice, as is shown by the latter giving a red colour to litmus paper. Hence the importance of rapid treatment at low temperatures, and with the least possible exposure to the air.

It might naturally be supposed that fermentation would commence in the juice while still in the cane, as soon as the latter was cut; but this is not the case, at least with canes which have not been injured by rats, frost, or other causes. Thus in Louisiana it is found that sound canes may be kept for 3 or 4 months after cutting, without affecting the sugar contained in the juice, the only result apparently being

the loss of a certain portion of the water of vegetation. The juice of some canes which had been cut 7 months marked a density of 8° B., and the sugar was in a perfect state of preservation. Doubtless the comparatively low temperature prevailing in Louisiana is an important factor to be considered in this instance, and in a warmer climate the same result could not be expected in the same degree. Yet some experiments in this direction made by Harland in the Philippines show that sound cut canes may be kept for a week at least, even in the high temperature of an Eastern tropical summer. Moreover, he chose unripe canes for the purpose, thinking it probable that their juice would deteriorate more rapidly, on account of their acidity and their relative poverty in sugar.

Two plants were selected, each having two healthy canes growing from the one stool; the juice from one of these was expressed and analysed immediately, the other was put aside in the laboratory for 8 days, at the expiration of which time the juice was expressed and submitted to analysis. The following are the results :—

FIRST EXPERIMENT.

Weight of cane	1 lb. 10¼ oz.	2 lb. 8¼ oz.
Loss of weight in 8 days	..	4·75 oz.
,, ,, per cent.	..	11·8 per cent.
Density of juice	5½° B.	5¾° B.
Crystallisable sugar	5·99 per cent.	7·33 per cent.
Uncrystallisable ,,	1·70 ,,	1·50 ,,
Ash	0·30 ,,	0 32 ,,
Unknown organic matters	2·27 ,,	1·99 ,,
Total solid matters	10·26	11·14
Reaction	Slightly acid	Slightly acid.

SECOND EXPERIMENT.

Weight of cane	2 lb. 1¼ oz.	2 lb. 6¼ oz.
Loss of weight in 8 days	..	4·7 oz.
,, per cent.	..	12 per cent.
Density of juice	5½° B.	5½° B.
Crystallisable sugar	8·17 per cent.	6·54 per cent.
Uncrystallisable ,,	1·90 ,,	1·40 ,,
Ash	0·26 ,,	0·24 ,,
Unknown organic matters	0·87 ,,	2·34 ,,
Total solid matters	11·20	10·52
Reaction	Slightly acid	Slightly acid.

These results show that no fermentation of the juice had taken place during the time the canes had been exposed after cutting; in fact, the singular result of the uncrystallisable sugar being less in the exposed samples, would seem to indicate that a ripening action had been going on. These results certainly appear to show that canes could be kept and transported long distances without undergoing loss of crystallisable sugar; but this, of course, only applies to sound canes, and the result might be quite different in cases where the rind of the cane was cracked, or eaten into by rats. Obviously, something also depends upon the climate, as in the West Indies and Demerara it is positively asserted that the juice must be expressed within 48 hours after cutting, to prevent excessive inversion taking place; this is somewhat overcome by the use of antiseptics, and the application of ½ oz. of dry salicylic acid per 500 gallons of juice is said to much reduce the quantity of lime necessary for the subsequent defecation.

The uncrystallisable sugar present in juice from sound canes consists, according to Winter, entirely of dextrose, levulose being found only in diseased and altered canes. The occurrence of dextrose is confirmed by the analyses of cane molasses by Prinsen Geerligs, who found that the uncrystallisable sugar did not consist of pure invert sugar, but contained a preponderance of dextrose.

Hydrometers.—It is possible to ascertain approximately the quantity of sugar contained in a sample of cane-juice by observing its density. This is done by means of a hydrometer (also called an areometer), of which there are several kinds in use, differing in their standard (basis) and graduation. Those most generally adopted among sugar-makers are Baumé (B.), Twaddell (Tw.), and Brix or Balling (Br.). The degree Brix (or Balling) gives the percentage of dry matter on the assumption that it is of the same sp. gr. as sugar. The following rules for the conversion of the scales will be found useful:—

I. To convert B. degrees to sp. gr. (for liquids lighter than water),—

$$\frac{144}{B.^\circ + 134} = \text{sp. gr.}$$

II. To convert sp. gr. to B. degrees (for liquids lighter than water),—

$$\frac{144}{\text{sp. gr.}} - 134 = B.^\circ$$

III. To convert B. degrees to sp. gr. (for liquids heavier than water),—

$$\frac{144}{144 - B.^\circ} = \text{sp. gr.}$$

IV. To convert sp. gr. to B. degrees (for liquids heavier than water),—

$$144 - \frac{144}{\text{sp. gr.}} = B.^\circ$$

V. To convert Tw.° to sp. gr., = (Tw.° × 5) + 1000, placing the decimal point after the first figure, thus (80° Tw. × 5) = 400 + 1000 = 1·400 sp. gr.

VI.—To convert sp. gr. to Tw.°,— $\frac{\text{sp. gr.} - 1{\cdot}000}{5} = \text{Tw.}^\circ$

The indications of the hydrometer refer to the proportion of solid matters contained in a certain quantity of water, all these matters augmenting the density of the liquid, without reference to their character. Hence the figures marked by the hydrometer express the quantity of sugar present, plus the other solid matters. The varying nature and proportion of these other solid matters introduce an element of uncertainty into the result, which can only be estimated approximately from the experience of a number of analyses of such juices. Upon such analyses, Dr. Icery founded the table which is reproduced below, the French measures employed by him being reduced to percentages.

The Mineral Matters. — From numerous analyses, the quantity of mineral salts contained in the juice of canes best fitted for sugar manufacture is estimated at 0·29 per cent. of the liquid. Saline matters, like organic substances, are found in a greater proportion in the top than in other parts of the cane. The analyses of young canes have not always confirmed the often expressed opinion that the salts in the juice of the cane are greater in quantity in proportion as the plant is farthest from the period of its development. On the contrary, the nature of the soil appears to have a much more strongly

marked influence, and it is to this that the variations in the figures representing the saline substances must be referred.

The fixed mineral matters contained in cane-juice are principally composed of potash, soda, lime, and iron, in the

TABLE of the Quantities of Sugar in a definite Volume or Weight of Juice corresponding to the principal Degrees of Baumé, and obtained directly by a series of Experiments at 25° C. (77° F.).

Baumé Degrees	Weight of Sugar per cent. of the Juice (indicated)	Weight of Sugar per cent. of the Juice (actual)	Differences resulting from the Influence of other Substances besides Sugar (principally Uncrystallisable Sugar)
4	2·8	2·6	4·9
5	4·9	4·8	4·7
6	7·8	7·4	4·0
6¼	8·5	7·9	
6½	9·1	8·6	
6¾	9·8	9·2	
7	10·5	9·9	3·6
7¼	11·1	10·5	
7½	11·8	11·1	
7¾	12·4	11·7	
8	13·1	12·3	3·2
8¼	13·7	12·9	
8½	14·4	13·5	
8¾	15·2	14·2	
9	15·9	14·9	2·6
9¼	16·5	15·5	
9½	17·2	16·1	
9¾	18·0	16·7	
10	18·8	17·4	2·1
10¼	19·6	18·0	
10½	20·4	18·7	
10¾	21·1	19·4	
11	21·7	20·0	1·5
11¼	22·6	20·6	
11½	23·0	21·1	
11¾	23·7	21·6	
12	24·4	22·7	1·3

state of oxides, carbonates, chlorides, sulphates, diphosphates, and silicates, with which are found blended salts of alumina and magnesia. The annexed analysis of the average ash of a great number of juices, extracted from canes of different species, and cultivated in soils of different natures, may be

considered as showing the proportions in which the most important substances are found :—

Potash and soda	18·83 per cent.
Lime	8·34 ,,
Oxide of iron	1·99 ,,
Silica	11·48 ,,
Alumina, magnesia, and acids in combination with the bases	59·36 ,,

The Organic Matters.—The vegetable (organic) matters contained in cane-juice have been divided into three groups ; the first embraces the substances which are termed granular matter ; the second, the albuminous material, capable of coagulation by heat ; the third, nitrogenous substances which can only be precipitated by alcohol and metallic solutions. This, of course, excludes the sugar itself, which is also an organic (vegetable) matter. Neglecting the sugar, the relative percentage proportions of the other vegetable matters of the juice are approximately as follows :—

Granular matter	28·7 per cent.
Albuminous ,, ...	7·6 ,,
Other vegetable matter	63·7 ,,

And their percentage proportions of the juice are roughly :—

Granular matter	0·100 per cent.
Albuminous ,, ...	0·027 ,,
Other vegetable matter	0·223 ,,
	0·350 ,,

The Granular Matter.—The granular matter is supposed to be formed by corpuscles or granules suspended throughout the liquid, and consisting of globular, transparent bodies containing semi-fluid matter in a thin covering. They communicate a milkiness to the liquid, and are with difficulty precipitated from its upper layers on standing ; but they may be easily and almost (though never quite) completely separated by filtration.

It is remarkable that juice thus filtered may be kept for 6 to 24 hours in conditions of temperature most favourable

to fermentation, without showing the slightest indication of such an action; but after this period, varying with the climate, it becomes dim, corpuscles are developed, fermentation then sets in and continues slowly, and, at a temperature of 25° C. (77° F.), well-formed bubbles appear in the liquid.

On the contrary, when the juice has been simply cleared from the coarse fragments of vegetable matter, which it always carries down with it, fermentation is rapidly produced after extraction from the cane, and the liquid becomes viscid in a few hours.

At the boiling-point, cane-juice is freed from part of the albuminous substance which it contains, and this substance, coagulating under the influence of heat, seizes on the granular matter, and draws it into the flakes which form on the surface of the liquid. This albumen of the cane-juice has also great importance as a cause of fermentation. Juice which, after boiling, has been completely freed from its albumen and its globules by means of filtration, may be kept perfectly fresh for many hours, at a temperature of 30° C. (86° F.).

It thus appears that it is sufficient to rapidly raise the newly-extracted cane-juice to the boiling-point, and to filter it immediately, in order to have a perfectly limpid liquid, which can be kept for a considerable time without any alteration.

Further, these globular and albuminous substances essentially contribute to develop acidity in the juice, and are one of the principal causes of the formation of uncrystallisable sugar. When they are eliminated, acidity is less strongly increased by the action of heat, and always remains much less than it would have been in the contrary case.

The Albuminous Matter.—The albumen found in cane-juice coagulates at about 80° C. (176° F.), and is precipitated by powerful acids, without being re-dissolved in any sensible degree by an excess of the reacting substance.

The Nitrogenous Matter.—After the albumen is partially separated by heat there remains in the juice a complex organic

TABLE showing the Percentage Weights of CRYSTALLISABLE and INVERTED SUGAR, and of SALINE MATTERS, contained in SYRUP at 25° C. (77° F.) and 41° B., the quality of the Sugar made being nearly uniform.

	Names of Establishments	Reaction of the Syrup	Percentage of Uncrystallisable Sugar contained in the Juice producing the Syrup analysed	Total Sugar	Crystallisable Sugar	Uncrystallisable Sugar	Proportions of Crystallisable and Uncrystallisable Sugar per cent. of the Total Sugar		Saline Matters per cent.
							Crystallisable Sugar	Uncrystallisable Sugar	
First syrup	La Gaiété	almost neutral ..	0·3	83·0	75·2	7·8	91	9	2·7
	Labourdonnais ..	acid	0·4	81·3	59·7	21·6	73	27	4·0
	Bel-Etang	almost neutral ..	1·2	71·8	54·4	17·4	76	24	..
	Sébastopol ..	neutral	0·9	74·1	59·2	14·9	80	20	..
	Moko	almost neutral ..	0·8	69·9	52·5	17·4	75	25	..
Second syrup	La Gaiété	,, ,, ..	..	69·2	57·6	11·6	83	17	4·6
	Labourdonnais ..	acid	..	74·1	49·9	24·2	67	33	5·0
	Bel-Etang	,, ...	..	50·6	29·6	21·0	58	42	..
Third syrup	La Gaiété	neutral	..	62·9	48·3	14·0	77	23	6·0

DETERMINATION of the Relative Quantities of UNCRYSTALLISABLE SUGAR and SALINE and ALBUMINOID MATTERS found in the JUICE, and the Different Syrups produced from it, reduced to the Temperature of 25° C. (77° F.) and a Density of 1·071 sp. gr.

Canes of full growth and ripeness; juice manufactured with a neutral reaction after the separation of the scum	Reaction	Percentage of Total Sugar	Crystallisable Sugar	Uncrystallisable Sugar	Proportion of Crystallisable and Uncrystallisable Sugar per cent. of the Total Sugar		Percentage of Ash	Percentage of Albuminoid Substances
					Crystallisable Sugar	Uncrystallisable Sugar		
Juice of the canes	acid	16·7	16·4	0·3	98	2	0·32	0·39
Syrup from the same examined at the moment of boiling, sent from the battery to the vacuum-pan at 22° B.	neutral	16·5	15·8	0·7	95	5	0·25	0·32
1st syrup, the produce of the above after the extraction of the sugar of the first boiling	,,	14·7	12·2	1·5	83	17	0·83	0·63
2nd syrup, the produce of the above after the extraction of the sugar of the second boiling	,,	12·5	9·8	2·7	78	22	1·08	1·09
3rd syrup, the produce of the above after the extraction of the sugar of the third boiling	,,	11·4	8·3	3·1	73	27	1·64	2·13
Canes of full growth, but not yet ripe; juice less rich, and manufactured with an almost neutral reaction.								
Juice of the canes	acid	14·4	12·9	1·5	87	13	0·22	0·47
Syrup from the same, examined at the moment of boiling, sent from the battery to the vacuum-pan at 22° B.	almost neutral	..	..	..	..	..	..	..
1st syrup, the produce of the above after the extraction of the sugar of the first boiling	,,	12·5	9·6	2·9	76	24	0·87	0·71
2nd syrup, the produce of the above after the extraction of the sugar of the second boiling	neutral	9·9	5·7	4·2	57	43	1·10	1·32
3rd syrup, the produce of the above after the extraction of the sugar of the third boiling	,,	..	..	..	..	..	..	..

matter which can be precipitated by alcohol and by neutral acetate of lead, and which is very soluble in alkalies and acids, even in tannic acid. Separated and purified by several precipitations in alcohol, this substance is without smell or taste, white, amorphous without influence on polarised light, giving out ammonia when heated with lime or potash, and deliquescent, though only partially re-dissolving after its separation. Left in water, it forms a disturbed and viscid solution ; mixed with sweetened water, it causes it to become equally viscid, and it appears to be the real cause of that viscid consistence which cane-juice and syrup assume under fermentation. This substance, escaping the action of the agents used to defecate the juice, accumulates in considerable quantity in the syrups. It must, therefore, be considered as one of the chief causes which hinder the extraction of sugar at the second boiling, as it is a powerful obstacle to the regular crystallisation of this substance, and excites rapid fermentation when sufficient water is present.

Effects of the Manufacturing Processes.—In order to estimate the amount of inverted (rendered uncrystallisable) sugar contained in the unmanufactured juice, and produced by the effects of the manufacturing processes, Dr. Icery made numerous analyses, the average results of which are given in two annexed tables (pp. 112–113). From them, it will be seen that while, in the case of fully grown and ripened canes, the *third* syrup contains only 27 per cent. of uncrystallisable sugar; yet in the case of fully grown and *un*ripe canes, the *second* syrup contains 43 per cent. of uncrystallisable sugar. It is generally conceded that when the uncrystallisable sugar in a syrup exceeds 37 per cent. of the total sugar, the syrup cannot be profitably re-boiled to yield a further quantity of sugar.

The annexed tables (pp. 116–119) exhibit the results of 78 analyses by Dr. Icery, recording the date of the analysis, the name of the estate, the kind of cane, the age of the cane, the

reaction of the juice, its temperature, its density by hydrometer, its specific gravity, the amount of albuminous matters in it, the weight of the ash, the proportion of sugar indicated, the proportion found by actual analysis, the relative proportions of crystallisable and uncrystallisable sugar, and remarks concerning special conditions ; they form a unique record of observations covering a great space, both with regard to locality and time.

An interesting series of determinations of the sugar contained in the juice and in the cane was made by L. Ehrmann, in 1888–9, in Mauritius, during the period of cutting the cane, from October to March. The varieties of cane were the Bamboo, Port Mackay, and Louzier, and the samples of juice, both first and second mill-juice being distinguished, were drawn from all parts of the island.

It is not possible, however, numerous as they are, to rely on the analyses for an exact average of the richness of the cane in Mauritius, as the earlier part of the period of cutting was omitted, and the season was unduly prolonged to March. A summary of the results is given in the table below :—

Month	Percentage of Crystallisable Sugar in the Juice	Purity	Sugar per hogshead of 54 gallons	Cane	
				Richest	Poorest
October ..	13·34 to 16·45	83·4 to 93·8	74·0 to 92·5	Bamboo	Port Mackay
November.	13·14 to 17·33	81·34 to 92·9	72·7 to 97·4	,,	
December.	11·82 to 18·37	81·4 to 95·0	65·0 to 103·8	,,	Port Mackay
January ..	10·61 to 14·78	76·81 to 92·76	58·3 to 82·0		
February..	8·82 to 14·16	..	48·6 to 78·6		

No.	Dates	Estates	Kinds of Cane	Age	Reaction*	Temp. Centigrade	Degree by Baumé
				months		deg.	
1	April 1864	La Gaiété	Bellouguet, plant canes	12	s.a.	25	9·1
2	,,	,,	Ditto, plant canes	..	,,	..	5·0
3	July 1864	Queen Victoria	Diard ,,	18	,,	..	9·0
4	Aug. 1863	La Gaiété	Bamboo ,,	15	a.	..	9·8
5	,,	,,	,, ,,	..	,,	..	9·7
6	,,	,,	Otaheite ,,	..	,,	..	9·8
7	,,	,,	Bamboo and Otaheite, plant canes	..	,,	..	9·7
8	,,	Argy	Bamboo, 2nd ratoons	..	v.a.	..	9·5
9	,,	Deep River	Bellouguet, plants	18	,,	..	8·8
10	,,	,,	Bamboo ,,	..	,,	..	9·1
11	,,	Bel Etang	Bellouguet ,,	..	,,	..	8·0
12	,,	La Gaiété	Bamboo ,,	15	,,	..	10·0
13	,,	,,	Penang, 3rd ratoons	12	s.a.	..	9·4
14	,,	,,	Bellouguet, plants	15	v.a.	..	9·1
15	Aug. 1864	Queen Victoria	Bamboo ,,	18	s.a.	..	9·5
16	,,	La Gaiété	,, ,,	17	,,	..	8·9
17	,,	,,	,, ,,	16	,,	..	9·7
18	,,	,,	,, ,,	3	,,	..	6·7
19	,,	,,	,, ,,	3	,,	..	6·5
20	,,	,,	,, ,,	6	,,	..	5·8
21	,,	,,	Mixed	14	,,	..	9·7
22	Sept. 1863	,,	Bellouguet and Bamboo, plants	15	,,	..	9·8
23	,,	,,	Ditto, 2nd ratoons	12	,,	..	10·2
24	,,	,,	Bellouguet ,,	..	v.a.	..	9·5
25	,,	Beau Rivage	Bamboo, 1st ratoons	..	s.a.	..	10·5
26	Sept. 1861	La Gaiété	,, plants ..	15	,,	..	9·4
27	,,	Bel Etang	Mixed	17	a.	..	8·4
28	Oct. 1863	La Gaiété	Bamboo, plants ..	15	s.a.	22	10·4
29	,,	,,	,, ,,	..	,,	..	10·6
30	,,	,,	,, ,,	..	a.	..	10·8
31	,,	,,	Guinghan ,,	..	,,	..	10·2
32	,,	,,	Bellouguet ,,	..	,,	..	11·2
33	,,	,,	Bamboo, ratoons	..	,,	25	11·2
34	,,	,,	Guinghan ,,	..	,,	..	12·0
35	,,	,,	Bellouguet, plants	..	s.a.	..	10·0
36	,,	,,	Penang, 1st ratoons	..	,,	23	10·2
37	,,	,,	Penang and Bamboo, 1st ratoons	..	,,	..	10·1
38	,,	,,	Bellouguet, plants	15	v.a.	..	10·5

* a., signifies acid ; s.a., slightly acid ; v.a., very acid.

Specific Gravity	Percentage of Albuminous Matters	Weight of Ash	Indications of the Polarising Saccharometer: Direct Reading	Indications of the Polarising Saccharometer: Equivalent Percentage of Sugar in the Juice	Indications by Chemical Analysis: Percentage of Total Sugar	Indications by Chemical Analysis: Crystallisable Sugar	Indications by Chemical Analysis: Uncrystallisable Sugar	Observations
1·068	0·54	..	85·8	14·000	13·0	..	..	Body of the cane.
1·036	0·66	..	31·9	6·200	7·0	5·00	2·00	Head of ditto.
1·067	0·42	..	99·3	16·200	16·0			
..	..	..	109·0	17·800	17·0			
..	..	..	108·3	16·800	16·0			
..	..	..	110·5	18·000	18·0			
..	..	..	108·9	17·800	17·0			
..	..	..	107·0	17·500	17·0			
..	..	..	96·8	15·800	15·5			
..	..	..	97·9	16·000	15·0			
..	..	..	80·0	13 000	13·5			
..	..	..	113·6	18·600	18·0			
..	..	..	101·7	16·600	16·0			
..	..	..	96·8	15·800	15·7			
1·072	0·56	..	108·1	17·600	16·5			
1·066	0·45	..	97·9	16·000	16·0			
1·073	0·46	..	107·2	17·500	16·5			
1·050	0·31	..	53·9	8·800	10·0	7·00	3·00	Short gross shoots.
1·049	0·38	..	59·9	9·800	11·0	7·00	4·00	
1·043	0·55	0·30	50·6	8·200	10·5	8·00	2·50	
1·072	0·48	0·36	105·5	17·249	17·0	16·70	0·30	
..	..	..	109·0	17·800	17·0			
..	..	..	117·5	19·100	18·0			
..	..	..	102·6	16·700	16·5			
..	..	..	126·0	20·600	19·0			
1·070	0·37	0·32	107·8	17·625	17·0	16·76	0·24	
1·063	0·29	0·18	84·7	13·800	14·0	12·40	1·60	
..	..	..	117·0	19·100	18·0			
..	..	..	124·8	20·400	19·0			
..	..	..	127·6	20·900	19·0	..	..	Taken in the same state.
..	..	..	123·5	20·300	19·0	..	..	
..	..	..	135·8	22·000	20·0	..	..	
..	..	..	134·7	22·000	20·0	..	..	Attacked by disease.
..	..	..	141·9	23·200	20·0			
..	..	..	112·2	18·300	17·0			
..	..	..	117·7	19·100	17·5			
..	..	..	117·7	19·100	17·5			
..	..	..	124·5	20·300	19·0			

No.	Dates	Estates	Kinds of Cane	Age	Reaction*	Temp. Centigrade	Degree by Baumé
				months		deg.	
39	Oct. 1864	La Gaiété	Bamboo, ratoons	13	s.a.	25	4·2
40	,,	,,	,, ,,	..	v.a.	..	9·8
41	,,	,,	,, ,,	3	s.a.	..	5·5
42	,,	Beau Rivage	Bamboo, plants ..	15	,,	..	9·9
43	,,	Queen Victoria	Mixed	18	,,	25	10·0
44	,,	Bel Etang	,, ...	..	,,	..	8 3
45	,,	La Gaiété	Bamboo	2	,,	..	2·2
46	,,	,,	Diard, plants ..	15	,,	..	10·9
47	,,	,,	,, ,, ..	..	,,	..	10·6
48	,,	,,	Penang ,, ..	..	,,	..	11·0
49	,,	,,	,, ,, ..	..	,,	..	10·4
50	Nov. 1863	,,	Bamboo ,, ..	13	v.a.	..	10·8
51	,,	,,	Penang and Bamboo, plants ..	15	a.	..	10·3
52	,,	,,	Penang, ratoons ..	..	,,	..	11·0
53	,,	,,	Bellouguet, ratoons	..	,,	..	10·7
54	,,	,,	Guinghan ,,	..	,,	..	11·0
55	,,	,,	Bamboo ,,	..	,,	..	11·9
56	,,	,,	Bellouguet ,,	..	v.a.	..	11·9
57	,,	,,	,, ,,	..	,,	..	11·2
58	,,	Queen Victoria	,, ,,	..	a.	26	10·6
59	,,	Constance	Bamboo and Guinghan, 2nd ratoons	..	,,	..	11·2
60	Nov. 1864	La Gaiété	Otaheite, ratoons	14	s.a.	25	11·4
61	,,	,,	Bellouguet, plants	15	,,	..	11·0
62	,,	,,	Mixed, ratoons ..	13	,,	..	10·2
63	,,	,,	,, ,, ..	2	,,	..	..
64	,,	,,	Guinghan ,, ..	13	,,	..	5·2
65	,,	,,	,, ,, ..	..	,,	..	6·6
66	,,	Labourdonnais	Bellouguet, 2nd ratoons	..	v.a.	..	11·6
67	,,	,,	Diard, 1st ratoons	..	s.a.	..	11·2
68	,,	,,	Guinghan ,,	..	,,	..	11·6
69	,,	La Gaiété	Mixed	2	,,	..	4·0
70	,,	,,	Bellouguet, ratoons	13	,,	..	4·0
71	Dec. 1863	,,	Penang and Bamboo ratoons ..	..	a.	28	11·3
72	,,	,,	Guinghan, plants	..	,,	27	10·9
73	,,	Belle Etoile	Bellouguet, 2nd ratoons	..	v.a.	28	8·8
74	Dec. 1864	Moka	Bellouguet	15	s.a.	25	4·7
75	,,	La Gaiété	Bamboo, plants ..	14	,,	..	8·4
76	Jan. 1864	Belle Etoile	Bellouguet, 2nd ratoons	..	v.a.	27	10·7
77	,,	,,	Guinghan, plants	..	s.a.	28	10 8
78	Jan. 1865	Bel Etang	Bellouguet, ratoons	14	,,	25	8·5

* a. signifies acid ; s.a., slightly acid ; v.a., very acid.

Specific Gravity	Percentage of Albuminous Matters	Weight of Ash	Indications of the Polarising Saccharometer: Direct Reading	Indications of the Polarising Saccharometer: Equivalent Percentage of Sugar in the Juice	Indications by Chemical Analysis: Percentage of Total Sugar	Indications by Chemical Analysis: Crystallisable Sugar	Indications by Chemical Analysis: Uncrystallisable Sugar	Observations
1·031	0·71	0·48	17·6	2·800	4·7	3·40	1·30	Head of the cane. } From the same plantation.
1·071	0·37	0·44	114·9	18·800	17·5	17·30	0·20	Body of the cane. } From the same plantation.
1·040	0·43	0·24	34·4	5·600	7·5	5·10	2·40	Short gross shoots. } From the same plantation.
1·075	0·46	0·31	113·6	18·500	17·0	16·7	0·3	
1·075	0·33	..	114·9	18·800	17·0	16·5	0·5	
1·062	..	..	89·6	14·600	14·0	12·8	1·2	
1·016	0·66	0·54	4·6	7·000	2·7	1·6	1·1	
1·083	0·19	0·21	130·9	21·400	19·7	..	..	Obtained from the same canes. 1st pressing.
1·079	0·27	0·23	125·4	20·450	18·9			Obtained from the same canes. 2nd ,,
1·083	0·15	0·13	130·4	21·300	19·6	..	..	Ditto, ditto. 1st pressing.
1·079	0·20	0·23	123·2	20·100	18·5			Ditto, ditto. 2nd ,,
..	..	..	129·8	21·200	19·5			
..	..	..	123·2	20·100	19·0			
1·083	..	..	132·0	21·600	19·5			
1·080	..	..	124·3	20·200	19·0			
1·083	..	..	131·4	21·400	19·5			
1·090	..	..	144·0	23·500	21·0			
1·090	..	..	143·5	23·500	21·0			
1·083	..	..	136·7	22·400	20·0			
1·080	..	..	125·4	20·400	19·0			
1·083	..	..	134·5	22·000	20·0			
1·086	0·23	0·31	139·7	22·840	21·0			
1·083	0·45	0·23	130·9	21·400	19·7			
1·073	0·38	..	120·4	19·600	18·2	17·9	0·3	Fine and ripe. } Same canes.
..	..	..	11·0	1·800	3·8	2·5	1·3	New shoots. } Same canes.
1·037	0·68	..	40·0	6·340	6·4	5·2	1·2	Juice from the head.
..	..	..	58·0	9·480	10·8	9·4	1·4	Ditto.
1·087	0·52	0·32	135·3	22·120	21·5	21·0	0·5	
1·084	0·53	0·41	133·1	21·760	20·0			
1·087	0·43	0·33	138·6	22·660	20·9			
..	..	..	18·1	2·950	6·8	4·2	2·6	Young rapidly-grown shoots.
..	..	..	8·2	13·500	5·4	4·3	1·1	Heads.
1·086	..	..	135·3	22·000	20·0			
1·080	..	..	131·0	21·400	19·5			
..	..	..	93·0	15·200	14·0	..	..	Fermented canes.
1·034	0·75	0·52	34·4	5·670	8·3	6·6	1·7	
1·063	..	..	91·6	15·000	14·5	14·0	0·5	After heavy rain.
..	..	..	126·0	20·600	19·0			
..	..	..	129·9	21·200	19·0			
1·064	..	..	91·3	14·870	15·0	13·7	1·3	After heavy rain.

Synopsis of the Operations entailed in preparing Sugar from Cane-juice.—A brief synopsis of the various operations gone through in preparing sugar from cane-juice, and the several ways in which those operations are or may be performed, will fitly conclude this chapter.

1. The Extraction of the Juice and all its Inherent Constituents from the Cane :—

a. By crushing the cane :
Roller mills.
b. By disintegrating the cane.
c. By macerating the cane.
d. By "diffusion."

2. The Separation of the Impurities from the Juice (termed Defecation and Clarification) :—

a. By heat.
b. By chemicals.
c. By filtration.

3. The Removal of the Water from the Sugar (termed Concentration and Granulation) :—

By heat :
a. Pans heated by fire.
b. ,, ,, steam.
c. Film evaporators.
d. Vacuum-pans.
e. Bath evaporators.
f. Fryer's concretor.

4. The Cleansing of the Sugar-crystals by Washing and Draining (termed Curing) :—

a. Simple draining.
b. Claying.
c. Spirit washing.
d. Vacuum chest.
e. Centrifugals.

CHAPTER III.

EXTRACTION OF THE JUICE.

AN explanation has already (p. 101) been given of the manner in which the juice of the cane exists in the plant, enclosed in little cells, which are surrounded and protected by lignose or woody matter, the latter forming about $\frac{1}{10}$th of the total weight of the cane. The liberation of the imprisoned juice may be effected either by (1) rupturing these cells, so that their contents flow out, or (2) combining a soaking in water with the rupturing process, or (3) utilising the membrane of the cells themselves as a means of allowing the escape of the sugar and salts in solution, by the process known as diffusion. Each of these methods will receive separate description.

By Crushing the Cane: Roller Mills.—It will be both interesting and instructive to briefly survey the development of mechanical appliances for crushing the sugar-cane, as it frequently occurs in remote districts that the simple means employed by our forefathers are much more applicable to the planter's needs than the most recent perfection of engineering skill.

The earliest forms were of the rudest kind. Among the ancestors of the present Hindoo ryots, and among the modern Carib Indians of British Guiana, the apparatus consisted of a tree-stump carved to represent the head of a deity, into whose mouth was thrust the end of a long pole, together with the piece of cane to be crushed.

This ineffective method gave place to one by which the juice was crushed out in a mortar. The primitive mill still

used in Dinajpur (India) is an adaptation of this plan, and is constructed as follows. A sound tamarind tree being selected, it is cut down at about 2 feet from the ground, where it may be 1½ foot or more in diameter; the stump is then hollowed out in the form of a mortar, and from the bottom of the hollow, a hole is bored a little way perpendicularly. The exterior of the stump is next pierced by a hole which meets the previous hole at an angle, and thus affords an outlet for the juice which runs into a strainer, fixed over an earthen pot sunk into the ground amongst the roots of the tree. The pestle does not pound the pieces of cane, but crushes or squeezes them. It consists of the trunk of a tree some 18 or 20 feet in length, and about 1 foot in diameter, rounded off at the larger end, which is placed in the hollow of the mortar, in an inclined position. A pair of oxen are yoked to a horizontal pole, which is supported at the outer end by a bamboo hanging by a notch made in the root end from the upper and smaller end of the long pestle, while the other end is attached by a loop to a bamboo hoop which encircles the stump, and thus acts as a runner. The pestle, therefore, forms a double-armed lever, the fulcrum of which is situated at the edge of the mortar, the cane being crushed between the sides of the pestle and mortar respectively. The force with which the pestle acts is increased by the driver sitting upon the outer extremity of the horizontal pole, and sometimes by weights being added. Such a machine, however, is ineffectual for crushing the cane, until the latter has been first cut into small pieces. To this end, a bamboo stake is driven firmly into the ground, and a deep notch is made in the end projecting upwards. The attendant passes the canes through this notch, which slits them longitudinally, while he cuts off the slit canes, in lengths of about a foot each, with a rude chopper.

The sugar-mill of Chinapatam (India) is a slight improvement. Instead of the standing stump of a tree being used, which could only be done when a suitable tree grew on the

desired spot, the mortar is carefully fashioned out of the trunk of a tree some 10 feet long, 8 feet of which is firmly embedded in the ground. The hollow, for two-thirds of the depth, is in the shape of an inverted truncated cone, the remaining third being cylindrical, with a hemispherical projection at the bottom, like the lower part of a common beer-bottle. A forked branch of a tree is worked down to a beam or plank 4 to 6 inches thick, and varying from near 18 inches in breadth at the single end to less than 1 foot at the forked ends. This beam is placed horizontally with the hollow against the mortar, and the bullock-driver sits on the undivided end to which the cattle are attached, while the beam turns round the mortar. The pestle is a piece of hard wood of the usual form, which is pressed down by a beam, one end of which is attached above the undivided end of the lower beam. There is a hollow on the under side of this upper beam immediately over the mortar, in which rests the top of the pestle, the other extremity being pulled downwards by cords attached to the forked ends. By tightening or slackening these cords, the upper beam acts as a regulating lever to give the pestle more or less force. The whole arrangement when at rest, has very much the appearance of a huge lime-squeezer.

The transition from the apparatus last described to the vertical wooden roller mill now in use at Chica Ballapura, and in other parts of India, was but natural. This mill has the same idea of a lever pressing upon the top of a pestle applied to another purpose, in the beam which is fixed to the top of the longer of the two rollers which projects above the framework in which they are placed. The other roller, which is only the height of the frame, is turned by the four spiral grooves and ridges at the upper end being jammed against corresponding grooves and ridges on the long roller—a precursor of the transmission of motion by means of cog wheels.

Two such cylinders of hard wood placed in a frame, hori-

zontally instead of vertically, so that they could be turned by two men, one at each end, and could be easily moved from place to place, formed a mill that met the requirements of those who had little cane to squeeze. Its cheapness, however (it can be made for 2 rupees, or 4*s.*), was probably the greatest inducement to its adoption. Such mills are in common use near Calcutta. They are almost universally employed by the Chinese, amongst whom they are conveyed from place to place, along the rivers and canals in the sugar districts, by migratory sugar-boilers.

The use of edge-runner mills, in which a large heavy wheel, generally of stone, was made to revolve vertically upon its edge in a small circular area some 8 to 10 feet in diameter, was scarcely a step in advance, and these mills are now obsolete for cane-crushing.

Vertical wooden rollers were employed in Europe in the 13th century, and in the 15th century their use extended to Madeira and Brazil. The old vertical wooden mill is probably still to be found in many places in the West Indies and elsewhere.

Wooden rollers were succeeded by those of stone, and then of iron. Examples of stone-roller vertical mills are still in existence, while vertical mills with iron rollers are comparatively common.

The rude apparatus described above has been to a very great extent displaced over a large part of India by vertical iron rollers set in a wooden frame. Messrs. Thomson and Mylne, of Beheea, having studied very carefully the conditions under which sugar was manufactured in the districts of which they were Zemindars, came to the conclusion that the only way in which the manufacture could be improved was, in the first place, by giving the cane grower absolute security that he could not be a loser by adopting improved methods —and this security they gave; and, in the second place, by making it to the interests of the various tradespeople in the

villages to encourage the adoption of improved apparatus. Thus, in introducing iron rollers in the place of the wooden pestle and mortar and other wooden apparatus previously in use, they arranged that the iron rollers should be carried in wooden frames made by the village carpenter. As these new wooden frames took the place of apparatus actually in use, the result of introducing the improvement was a considerable increase of business to the carpenter. Then the wooden frames were held together by iron bolts and nuts, which could be, and were, roughly made by the village blacksmith; and the brasses supporting the roller shafts were made by the village coppersmith. Thus a considerable body of village tradespeople became interested in the introduction of the apparatus; and as soon as actual experience had shown the yield in sugar to be increased, the introduction of the improved apparatus was rapid.

The frame in which the rollers were supported had four long standards or legs, which were let into holes dug in the ground to receive them, the earth being afterwards beaten down around each leg. This was found to give a sufficient foundation to resist the strains put upon the mill in working.

The mill was provided with arrangements rendering it easy to feed the cane into it, and to prevent the cane dropping down from between the rollers at their bottom end, and with a juice-tray to collect and deliver the juice. When the cane had passed through the rollers and been thus crushed, two or more canes were frequently twisted together and passed through the mill again; the cane being occasionally passed several times through the mill. When thus treated, the yield of juice obtained was, roughly speaking, say about 65 per cent., which was a great improvement upon the quantity previously obtainable.

In the first instance, the rollers, with their shafts and pinions and pole attachments, were obtained entirely from England, from Messrs. Manlove, Alliott and Co., who co-

operated with Messrs. Thomson and Mylne in working out the details of design and manufacture; but when Messrs. Thomson and Mylne's original patents ran out, the whole of the mills, including the rollers, with shafts, pinions, etc., began to be manufactured on a large scale in India in the small native foundries and workshops. These mills of native manufacture were often very rough, and liable to frequent breakdowns, but they were sold at a much less price than that at which it was practicable to deliver rollers, pinions, etc., made in England; consequently, to-day by far the greater number of the mills required are made in India itself, and only a small proportion come from England; these latter being

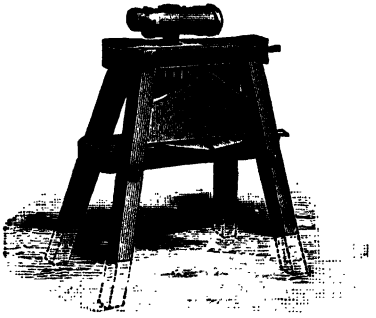

FIG. 18.—TWO-ROLLER MILL.

purchased by those who are willing to give a higher price in order to have better and more reliable machinery.

The mills of this class were intended to be used by proprietors having only small fields of cane, or perhaps having several fields of cane situated some distance from one another, and each of them small; consequently it was important that it should be very easy to transport the mill from one field to another so soon as the cane of the first field had been crushed. Contrary to the usual practice in large factories, the mill was carried to the canes, not the canes to the mill. Mills of this construction entirely met these requirements.

In the first instance these mills had only two rollers, and

these two were only 6 inches in length. The length soon increased to 8 inches, and before very long a third small roller, very deeply serrated, was introduced, the object of which was to lay hold of the cane and feed it in between the crushing rollers more easily than could be done by hand (Fig. 18).

In process of time the third roller began to be made of the same diameter as the other two, thus approaching in construction to the ordinary three-roller mills; but there was, and still is, this difference, that the three rollers are placed so closely together that no megass or trash turner is needed,

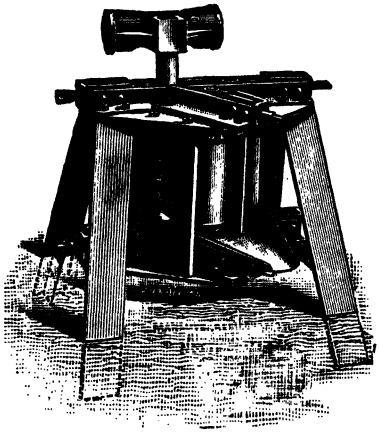

FIG. 19.—THOMSON AND MYLNE'S THREE-ROLLER MILL.

and in order to accomplish this end two tiers of pinions are needed, because the rollers are placed so close together that if all the pinions were in the same plane all would be in gear together at the same time, and the mill could not turn.

The accompanying illustration shows a three-roller mill of this type (see Fig. 19), but with the rollers in iron framing and supported upon angle-iron legs, and to that extent it differs from the description given above.

Horizontal mills with iron rollers are now certainly by far the most generally used, and the most advantageous in many

respects. Consequently, their various forms will be the principal subject of the following descriptions.

On the other hand, there are many instances where the planter would gladly avail himself of the productions of the country, rather than import expensive European machinery, and to men thus situated, instructions for making a wooden sugar-cane mill could not fail to be acceptable.

Wooden Cane-Mill and Water-Wheel.—Lieut. J. Clibborn, of the Bengal Civil Service, while engaged as Assistant Engineer on the Northern Division of the Ganges Canal, noticed the difficulty experienced by the native cultivators in providing bullock-power to work their *kolos* or mills, and determined to initiate the utilisation of the force represented by the numerous small falls in the canal distributaries near sugar plantations. With this object, he designed and constructed a water-wheel and cane-mill at the Bhaisani Falls, on the right main rajbaha of the northern division of the Ganges Canal.

The construction is designed to be of the simplest and cheapest kind possible, being almost entirely of wood. It is built by a country *mistri*, and can be kept in order by the ordinary village carpenter, whom the cultivator employs to look after his *kolo* during the season. It must be remembered, also, that with a few simple additions, other uses may be found for the water-wheel.

The simplicity of the arrangement (which is shown in Plate I.) consists mainly in the fact that the shaft A of the water-wheel is prolonged to form the upper roll B of the cane-mill, which does away with the necessity for complicated methods of communicating power. The framing C is also simple, being made triangular, and the adjustments being effected by wedges D.

The Indian cane is probably not so stiff in structure as that grown in the West Indies, and the ordinary method of causing the cane, after passing through the first pair of rollers, to turn

ELEVATION AND SECTION

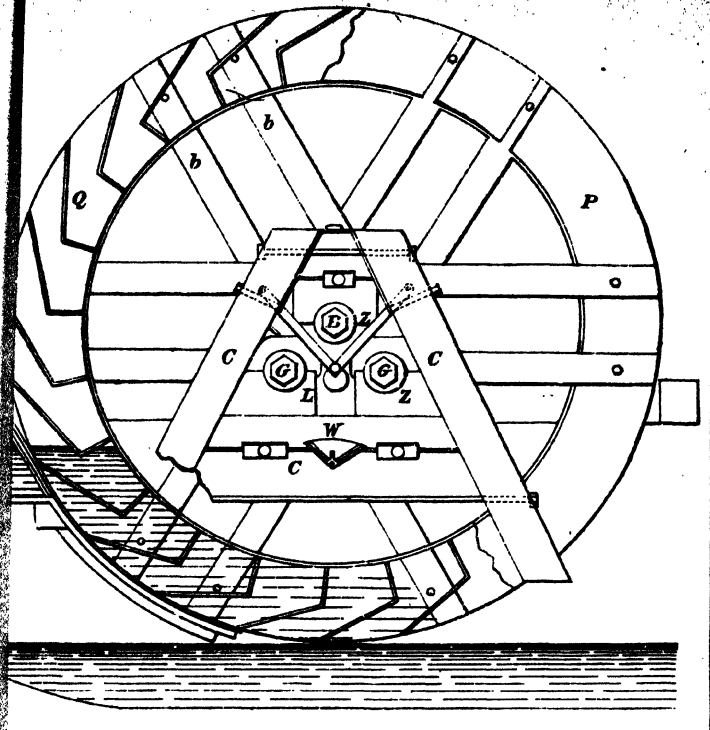

SECTION THROUGH ROLLERS WEDGES REMOVED.

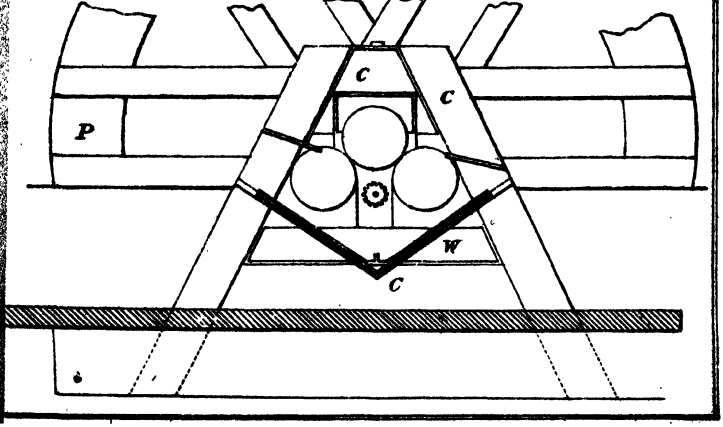

The buckets Q, of 1-inch deodar planks, are let into ½-inch deep grooves in the shrouding P, and the whole wheel is kept together by 12 ½-inch bolts, passing through the ends of the spokes. The sole-boards, also 1-inch deodar, are nailed on the shrouding and buckets, in such a manner as to leave a ½-inch slit at the top of each bucket for ventilation.

The main shaft is supported on kikar bearing-pieces S, which are bolted down to a framing T, made of sissú, and firmly fixed in the masonry of the falls.

The framing C of the mill is made of sál wood, securely mortised, and held together by 1½-inch bolts Y. The lower portion is embedded in masonry to prevent movement. The bearing-blocks of the lower roll G are supported on a bar, beneath which are two wedges; by means of these and the wedge above the upper roll, adjustment can be effected. The wedges have bolts through them, which, when screwed up, prevent any chance of slipping.

The bearing-blocks Z of the forward lower roll are carried over as well as below the bearings, in order to prevent the roll rising. All these bearing-blocks are tongued into the frame, to prevent lateral movement; and either of the two lower rolls can be removed from the frame, by easing down the wedges.

The cog-wheels are made of a block of sissú, with kikar teeth dovetailed in, and then two iron rings are shrunk on at each end. They have slightly-tapered hexagonal holes cut in the bosses, which fit on to the end of the rollers. It is better not to drive these quite home in the first instance, so as to allow of their being tightened up occasionally.

The sheets of iron to catch and carry the expressed juice to the delivery-trough are supported on small angle-irons screwed to the frame, so as to allow of their being drawn out to be cleaned. For the sake of portability, they are made of light sheet-iron on a wooden frame. On the top of them are laid the sheets of perforated zinc, which are kept from touching by a small ledge 1 inch high. A little black-lead (graphite)

applied occasionally is all that is required for lubrication. The bearing should be kept dry, and the surface speed of the rollers ought not to be more than 20 feet per minute, or all the juice will not be expressed from the cane. It would be a great improvement to shrink iron collars, 6 inches wide and $\frac{1}{2}$ inch thick on the water-wheel bearings, which would prevent any wear. It would also be advantageous to cover the rolls with $\frac{1}{8}$-inch or $\frac{1}{16}$-inch sheet-iron. A better plan is to cover the rollers with kikar wood on end, 3 inches thick, dovetailed into the rollers; this appears to work very well. These improvements would add very little to the cost of the mill, certainly not 50 rupees (5*l.*).

If any difficulty should be found in procuring sissú wood of sufficient scantling to make the main shaft, it could be built up of a core of sál wood 1 foot in diameter, and thickened at the required places by the addition of strips of kikar or sissú. Built-up shafts like this are in common use in many parts of the world, and withstand the effects of climate better than solid work. This, of course, would necessitate the iron sheeting. With a supply of 14 cubic feet of water per second, and a fall of 4·25 feet from surface to surface, this mill will crush 1 maund (say 80 lb.) of cane in 4 minutes, the nominal horse-power used being about 6·2. The outturn, however, depends entirely on the fall available, as the wheel and mill are quite strong enough to crush twice that amount, with a sufficiently high head of water.

The following is a list of the woods used in the construction of the mill:—

For the mill-framing, wheel-spokes, sluice-gates, and framing to support—sál or saul (*Shorea robusta*).

For the wheel—any wood not likely to be affected by dry rot.

For the shaft, rolls, and cog-wheel bosses—sissú, sissoo, or sheeshum (*Dalbergia Sissoo*).

For the cogs, bearing-blocks, and wedges—kikar (*Acacia leucophlœa*).

For the shrouding, sole-board, and buckets — deodar (*Cedrus [Abies] Deodara*).

If the mill crushed 1 maund of cane in 4 minutes, thus affording 1 maund of juice in 8 minutes, and assuming 200 maunds (say 16,000 lb.) of juice to the beegah (here equal to $\frac{5}{8}$ acre) as a fair average return, it would appear that the mill is capable of working off 1 beegah in 26 hours (says 30 hours including stoppages), or 72 beegahs (say 45 acres) in a working season of 3 months.

The expenditure incurred in crushing 1 beegah of sugar-cane by the native kolo, according to four separate authorities, stated in Indian currency, is as follows :—

	1			2			3			4		
	R.	A.	P.	R.	A.	P.	R.	A.	P.	R.	A.	P.
Cutting cane into short pieces..	0	4	0	0	14	0	0	10	6			
Pedia and Muthia who put cane into press	1	11	0	2	2	0	2	1	0			
Miscellaneous repairs	1	0	0	0	12	6	1	4	0			
Price of lath	3	0	0	3	0	0	0	15	0			
Hire of bullocks	6	0	0	6	0	0	6	0	0	11	4	0
Hire of kolo and pans	0	11	0	0	11	0	1	2	0	1	14	6
	12	10	0	13	7	6	12	0	6	13	2	6

Average, R. 12 11 0, or say 24*s.* 8*d.* in English currency.

The earnings of the mill at the rate of kolo cost would be 913 rupees (say 90*l.*) in one season.

A point to be borne in mind is that the cost of construction would not be increased if a greater fall of water were available, while the outturn would be more. In fact, the rollers and framing, for the sake of simplicity, are made quite strong enough for water giving twice the power now exerted at Bhaisani.

The specification of the materials required is shown on opposite page.

Iron Cane-Mills.—It may truly be said of cane-mills that their name is legion, and a comprehensive account of all the

Description	No.	Length	Breadth	Depth	Contents	Total
Deodar wood—						
Shrouding	2	50·0	..	0·16	16·0	
Backing	1	27·0	5·5	0·1	14·8	
Buckets	24	2·0	5·25	0·1	25·2	
Total deodar wood ..	..	..	..	..	..	56·0 cubic feet
Sál wood—						
Spokes	12	12·0	0·66	0·25	23·76	
Frame	4	8·0	1·00	0·75	24·00	
,, ...	2	6·0	1·00	0·75	9·00	
,, ...	2	5·0	0·75	0·75	5·62	
,, ...	1	5·0	1·00	1·00	5·00	
Total sál wood	..	..	..	..	..	67·38 cubic feet
Sissú wood—						
Shaft	1	14·0	1·8	..	25·2	
Rollers	2	5·0	1·8	..	18·0	
Fluted rollers	1	6·0	0·5	..	3·0	
Cog wheels	3	1·0	1·8	..	5·4	
Framing under kikar bearings	2	12·0	1·0	1·0	24·0	
Total sissú wood ..	..	..	..	..	..	75·6 cubic feet
Kikar wood—						
Bearings	2	6·0	0·75	1·0	9·0	
,, ...	4	3·0	0·75	1·0	9·0	
,, ...	2	2·0	0·75	1·0	3·0	
,, ...	5	..	..	..	5·0	
Total kikar wood ..	..	..	..	..	..	26·0 cubic feet
Iron work—						
Bolts, etc.	½″	72	2 ft.	..	47 lb.	
,, ...	¾″	24	,,	..	36 ,,	
,, ...	1¼″	16	,,	..	64 ,,	
,, ...	1½″	22	,,	..	136 ,,	
						3·5 maunds
Trough, etc.	..	..	..	..	..	1·0 ,,
	..	..	..	..	..	4·5 maunds

Items	Quantity	R.	A.	P.	Per	Cost	Total
Deodar wood, cubic feet	70	1	0	0	Cub. ft.	70	
Sál wood ,, ...	70	2	0	0	,,	140	
Sissú wood ,, ...	76	1	8	0	,,	114	
Kikar wood ,, ...	25	1	8	0	,,	38	
Iron work, maunds	4·5	15	0	0	maund	67	
Labour ,, ...	..		..		..	250	
Grand total cost	..		..		..	..	679 rupees

Or say 68*l.*

forms introduced or proposed would fill a large volume. For all practical purposes, it will suffice to describe a few of the typical arrangements adopted by the chief engineering firms. It may be premised that no subject seems to be in a less satisfactory state, scarcely any two opinions coinciding as to what is the best form of mill.

The following is an account of the constructive details of an ordinary 3-roller cane-mill. The combined mill and its engine are shown in elevation and in plan in Plate II. The mill consists of a bed-plate A of cast iron, weighing not less than 2 tons 5 cwt., and of the section shown in Plate III. It is formed with a concave bottom to receive the cane-juice, and has a delivery B cast on the side, for discharging the juice into the tank B^1, whence it is raised to the clarifiers by the pump B^2, which is worked from a crank on the shaft of the upper roll of the mill. Fitting strips are cast on each side, and faced to receive the side frames E.

The bed-plate is bolted down to the foundations with four 3½-inch bolts C passing through the side frames, and held by plates and keys, and also with four 1½-inch holding-down bolts D 6 feet 9 inches long. The side frames E are of cast iron, and weigh not less than 36 cwt. each; they are cored through to receive the bolts C, and are cast with bosses for adjusting screws F, 2¼ inches in diameter, by which the space between the rolls is regulated. The upper roll is distant from the two lower ones about ⅕ to ¼ inch. The frames are accurately faced at bottom, and fitted to the bed-plate. They are held down by the bolts C, which also hold down the centre caps G of the upper roll. Spaces are left in the frames to attach a "trash-turner" H, which is placed between the two lower rolls, and under the top one, to guide the cane between the upper and second lower roll. Openings are left to place the rolls; and cast-iron filling-up pieces are provided, accurately fitted and held in place by diagonal bolts, 2¼ inches in diameter. A wrought-iron feeding-table H^1, and

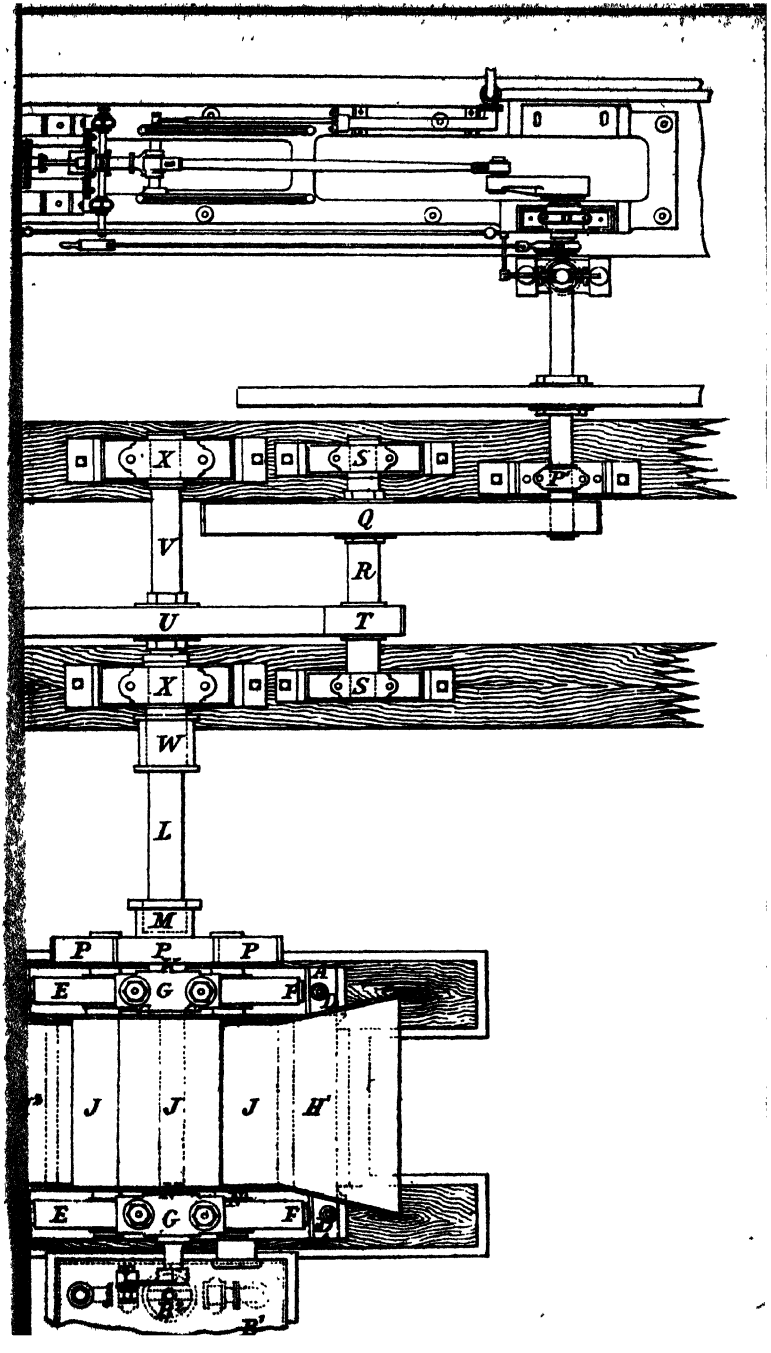
X
S
P
Q
V
R
U
T
X
S
W
L
M
P
P
P
E
G
F
A
J
J
J
H'
E
G
F
B'

wrought-iron begass-delivery H^2, are provided. The three cast-iron rolls J are each 2 feet 2 inches in diameter, and of the section shown in Plate III. Each roll should weigh not less than 35 cwt., and be rough turned. The two lower rolls are cast with flanges on the outer sides, to prevent the cane-juice spreading beyond the rolls. Each roll is cored 8 inches square through the centre, and is hung with 8 keys to the shafts K; wrought-iron rings are shrunk on to the shafts outside the rolls, to prevent the keys starting. The shafts K are of the best wrought-iron, 8 inches square, with 7-inch journals, and have square ends for hanging pinions to connect the rolls. A clutch-box M is cast on the pinion, for connecting to the intermediate shaft L. The bearings N are of the best gun-metal, accurately bored and fitted in the side frames with a flange on each side. Steel plates are fitted at the back of the bearings, to receive the thrust of the adjusting-screws F, which are passed through spaces in the side frames.

Three spur-pinions P, each 2 feet 2 inches in diameter, 3·14 pitch, and 8 inches broad, are hung, each with 8 keys, to the ends of the roller-shafts, to connect the rolls for work. The intermediate shaft L is of cast-iron, 8½ inches square, 9½ inches square at each end, and connected to the shaft of the upper roll by the square clutch-box M, and to the intermediate gearing by the square clutch-box W. The intermediate gearing consists of a spur pinion (see plan) P^1, 1 foot 9 inches in diameter, 3·14 pitch, 9 inches broad, bored out and fitted to the engine-shaft; it makes 40 revolutions per minute, and works into the spur-wheel Q, which is 7 feet in diameter and 9 inches broad, and is hung to the shaft R with 8 keys. The shaft R is of cast iron, 8½ inches in diameter, and the journals are 7 inches in diameter by 9 inches long, with collars left on each side. The distance between the inside of bearings should not be less than 4 feet 4 inches. This shaft makes 10 revolutions per minute, and runs in the

plummer-blocks S, which are fitted with gun-metal bearings, and are provided with wall-plates and holding-down bolts, 1½ inch in diameter, to fasten them down to the brickwork. The pinion T is 1 foot 9 inches in diameter, 3·14 pitch, 9 inches broad, hung to shaft R with 4 keys, and works into the spur-wheel U, which is 7 feet in diameter, 9 inches broad, and 3·14 pitch, has 6 arms, and is hung to the shaft with V 8 keys. This shaft is of cast iron, 9 inches in diameter; one end is formed 9½ inches square for connection to the mill. The shaft V runs in two plummer-blocks X, which are fitted with turned gun-metal bearings, and are provided with wall-plates and holding-down bolts. The shaft V makes 2½ revolutions per minute, that being the speed at which the rolls are required to revolve. Motion is obtained from a high-pressure engine, of 16 nominal horse-power, having a fly-wheel 14 feet in diameter, weighing 3 tons, and making 40 revolutions per minute. Steam is supplied from a Cornish boiler, 20 feet long, 6 feet in diameter, and 3 feet tube, and having the usual fittings.

The enlarged details of the mill are shown in elevation, horizontal section taken through AA and BB in the elevation, transverse sectional elevation taken through centre of mill on the line C C in the half plan, and in half plan in Plate III., and in longitudinal sectional elevation taken through the lines D D and E E of the half plan in Fig. 20. Fig. 21 shows two views of a spur-pinion.

The method of using the mill is as follows. The canes are introduced into the mill from the feeding-table H^1, and are crushed between the top and first bottom rollers. Guided by the "trash-turner" H, they pass between the top and second bottom rollers, by which the remaining juice is expressed, and the exhausted cane, now called "begass" (also spelled "megass," "bagasse," etc.), is carried away by the delivery-table H^2. Care is taken that the exhausted spongy cane does not again come into contact with the liberated juice, so as to reabsorb it.

Figs. 22 and 23 show an end view and front view of the 3-roller cane-mill made by Manlove, Alliott and Co. The

FIG. 20.

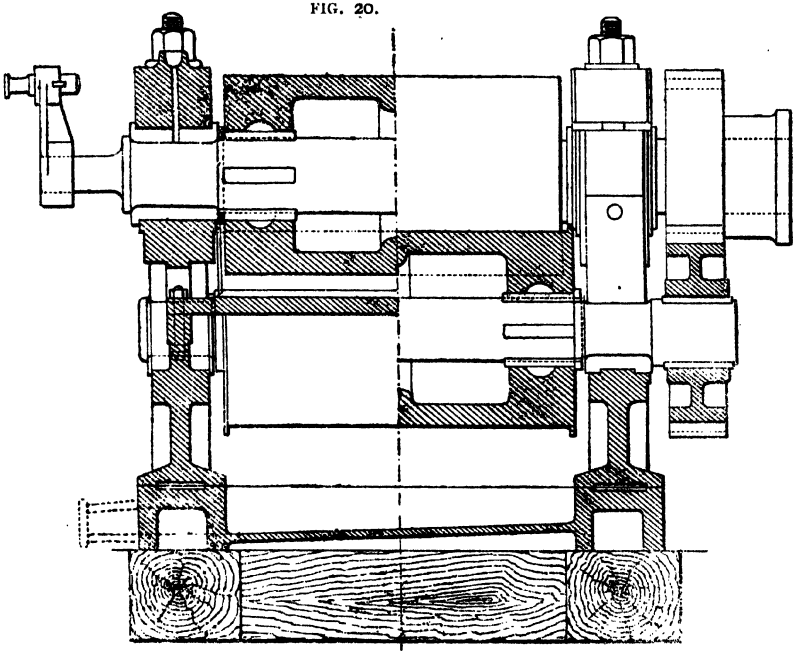

Scale ½ in = 1 ft.

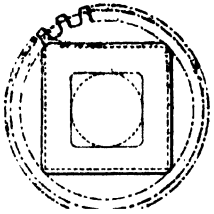

FIG. 21.

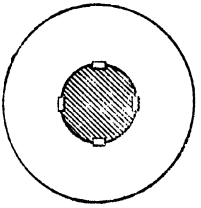

FIGS. 20, 21.—ORDINARY 3-ROLLER MILL, AND SPUR-PINIONS.

bed and cheeks are entirely of cast iron, but the metal is carefully proportioned to its work. Strong wrought-iron tie-bolts take the main tensional strains in the mill. The

side roll caps, while well established when the mill is working, are readily removable, and the rolls can be slid out without any lifting.

Rousselot's 3-roller mill, as made by Fawcett, Preston and Co., is shown in Figs. 24 and 25. The bed-plate D is seated on a strong timber framework, through which the large bolts I (Fig. 25) pass, allowing the top roll to lift a little when any extraordinary strain occurs. The canes pass by the carrier H (Fig. 25) down the slide E, through the rolls, and the begass emerging at D is taken away by a carrier worked by

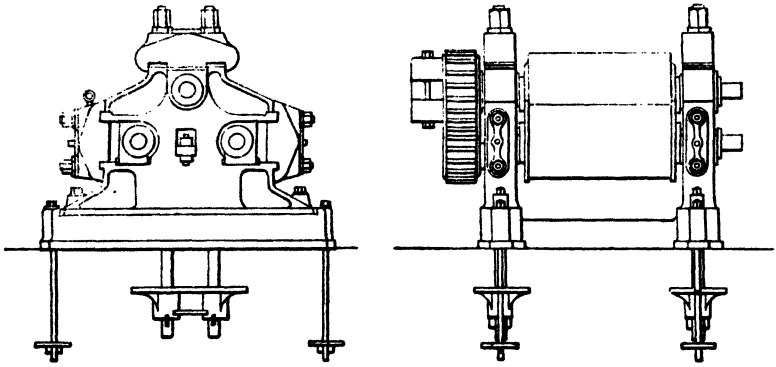

FIGS. 22, 23.—MANLOVE, ALLIOTT AND CO.'S 3-ROLLER MILL.

the drum I. The ordinary frame of cast iron is not exposed to tension. The resistance of the canes between the rolls A B C is taken from the top roll A through the cap and bolts, and compresses the frame, while the tendency to separate the bottom rolls is controlled by the horizontal tie-bolts; it is claimed that for practical purposes, the frame might be made of oak instead of iron, as the working strains are thrown upon the wrought iron, instead of being borne by cast iron, as in other mills. The 3 cast-iron rollers are keyed on to the wrought-iron shafts. The "returner-bar," or "knife," or "trash-turner," as it is variously denominated, is a flat or

curved plate, placed at a distance of 2¼ to 3 inches below the bottom of the top roll, made to touch the circumference of the front roll, and to stand off about ½ inch from the lower back roll, so as to allow the juice to run down.

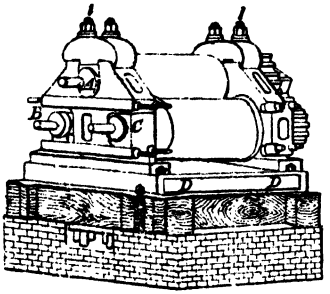

FIG. 24.—ROUSSELOT MILL.

The mill shown in Fig. 26 is composed of 2 cast-iron frames *d*, secured to the bed-plate *e* by bolts at the corners. Seats are prepared on the frames *d* for carrying the brasses for the shafts of the rolls *a b c*. The bolts *i j* pass through

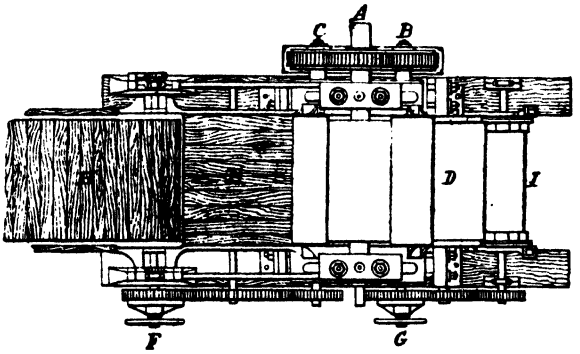

FIG. 25.—ROUSSELOT MILL.

the frames and bed-plate and through the timber *k*, and take the strain of the top roll; and the bolts *h*, of which there are 4 for each frame, take the strain on the caps *g f*. In this manner, the strain is borne by the wrought-iron bolts instead of being thrown on the cast-iron frames, enabling more juice

to be extracted with safety than can be done with the ordinary cast-iron frame. The yield of sugar from the cane crushed in this mill at the central factory in St. Lucia, during the season ended in May 1881, is stated at 8 per cent. of the weight of the cane; the cane there seldom gives juice over 7° B., yet by the careful use of a Rousselot mill, defecators, triple-effect, clarifiers, strike-pan, and centrifugals, with a very

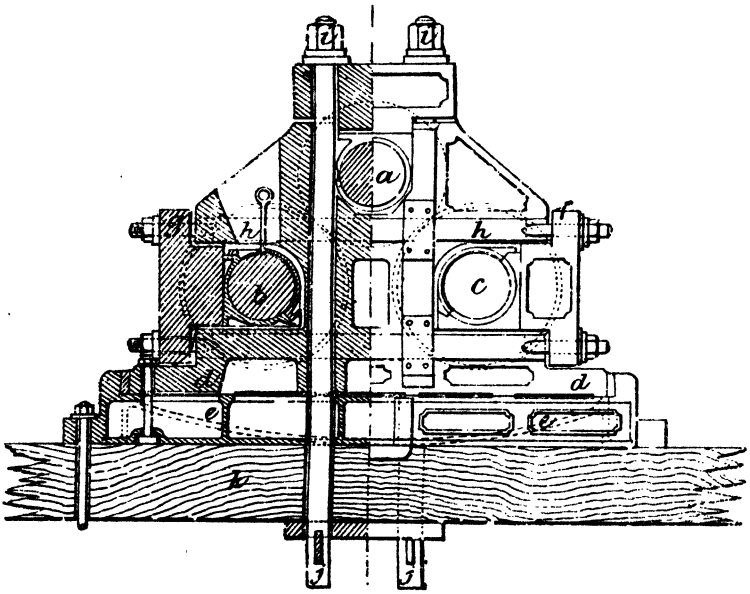

FIG. 26.—ROUSSELOT MILL.

limited consumption of animal black, 10,000 tons of cane give 800 tons of sugar of superior quality.

In the improved form of the Rousselot mill, the returner-bar and knife are reduced to the smallest dimensions by Chapman's patented arrangement of bringing the side rolls as close together as the top cap bolts will admit. These bolts are inclined vertically to one another, and the effect of this arrangement is to reduce the width of the knife, and therefore the friction of the cane passing over it, and thus

reduce the power and consumption of fuel required to drive the mill. The returner-bar is a heavy forging fitted with a suitable steel plate knife, or, if of the rocking type, of cast steel.

When canes are passed through a mill without choking, everything works smoothly; but from the moment that a cane doubles up, trouble begins. The rolling friction of the mill is a slight matter; but the sliding friction in the confined space between the top roll, the front roll, the returner-bar, and the back roll, is very great. If the returner-bars are weak, they bend by the pressure, and the jam is relieved: the bar is taken out and straightened, and work is resumed. A pressure of 50 lb. per square inch drives the mill when there is no jamming; but 80 lb. is required when it is "braked" by accumulation of begass between the rolls and the returner-plate; this begass becomes hot and hard with friction, the resistance has to be overcome, and returner-bars are made to resist the force of a 60-H.P. engine, geared 20 to 1, and making 40 revolutions per minute.

Many engineers contend that those who are trying to increase the yield in juice by very slow movement, are in error, and they recommend experiment in the direction of lighter and repeated crushings, combined with maceration. By using two mills of moderate proportions, more effective work is said to be obtained, because there is less sliding friction; and it is questioned whether the extra quantity of juice obtained by the extra force of a large mill is not at the expense of the quality.

The mill erected at Aba-el-Wakf, Upper Egypt, for the Khedive was, however, a direct departure from this dictum.

It is shown in front elevation, plan, and side elevation respectively, with the detail of the bearing, in Plate IV.

The three rolls employed in this mill are each 48 inches in diameter by 5 feet 6 inches long, staked by means of 8 keys at each end, on to 18-inch wrought-iron shafts, the keys being

arranged so as to "hit and miss" on opposite ends, in order that they may be readily driven in or out without removing the rolls. They are not in any way secured against working out. Staked by 4 keys on the ends of the roll-shafts outside the mill-frames, are spur-wheels, each nearly twice the diameter of the rolls. The spur-wheels of the two lower rolls being on the same side, and passing each other, are actuated by a double-shrouded pinion, keyed on to a second-motion shaft, which passes under the bed-plate of the mill, and carries, at its opposite end, an internal-geared wheel 11 feet 9 inches in diameter. The top roll spur wheel is on the opposite side of the mill to the wheels of the bottom rolls, and is actuated by a shrouded pinion keyed on a short second-motion shaft, one end of which has a journal in a bracket bolted to the mill frame, and the other revolves in a pedestal fixed to a massive A-frame, and carries, overhung, a spur-wheel of the same diameter and pitch as the internal wheel on the lower second-motion shaft. The outer end of the crank-shaft of the steam-engine is carried in a pedestal resting on the bottom of the A-frame, and by means of separate pinions keyed on it, engages into the upper spur and the lower annular wheel.

The effects of this are (1st) that the power of the engine is divided over two pinions, having, together, 18 inches of face, a greater width than could usefully be given to one pinion gearing into one wheel; (2nd) the second-motion shafts distribute the power through three pinions, having, together, 38 inches of face, and, owing to the large diameter of the roll spur-wheel, travelling nearly twice as fast as the peripheries of the rolls, and, on that account, having to endure only half the pressure on the teeth and journals that would have arisen under the old system of gear; and (3rd) the large diameter of the roll-wheels allows three teeth to be in gear at one time instead of only one. In order to permit of a variation in the distance apart of the rolls, without affecting the accuracy of the gearing, the brasses which carry the two lower roll-shafts

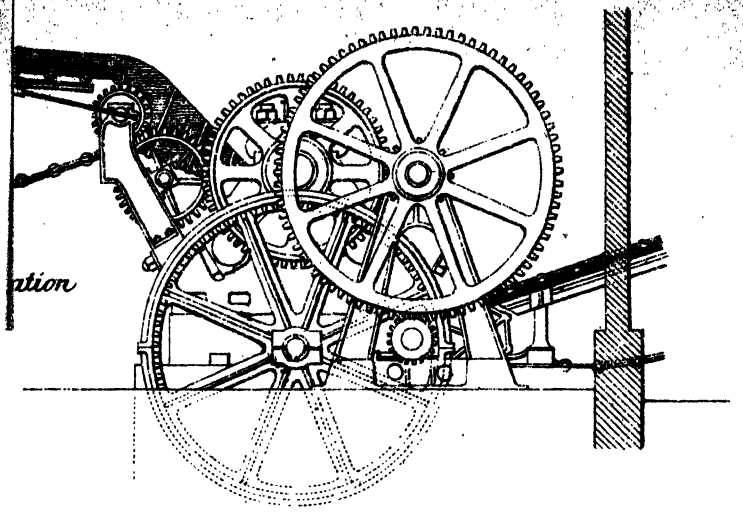

Detail of Bearing

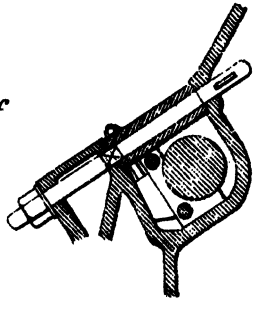

EL WAKF SUGAR FACTORY

THREE ROLLER CANE MILL.

Scale: ⅛ Inch = 1 Foot.

5 10 15 20 25 Feet.

are arranged to slide upon their seats in a direction nearly at right angles to the lines of centres of their spur-wheels and the pinions they engage into ; and these brasses, instead of being kept up to their work by the points of large set-screws in the usual fashion, are supported over their entire width by quoins or inclined planes, drawn up by pairs of bolts passing through the top distance-pieces closing up the gaps in the side frames, the angles at which these gaps lie offering also the contingent, but not inconsiderable, advantage of enabling the bottom rolls to be taken out without interfering with the top roll.

The caps of the top rolls are held by 6-inch bolts passing completely through the side frames and base-plate, under which they are cottered without the intervention of the usual layer of timber or other elastic material, so that there is no possibility of yielding, however severe the strain. At Bene Mazar, the same strength of gear was applied to rolls 48 inches in diameter and 6 feet 6 inches long, and both sizes worked without the smallest difficulty or accident.

It will be noticed that the spur-wheel driving the first lower roll is considerably overhung, but this is not objectionable, because the power required in the first squeeze of the canes is very much less than that expended in the final pressing, which circumstance compensates for the overhang, the shafts being of equal diameters.

To illustrate more clearly the differences between the ordinary and novel systems of gearing, the pressures on the various moving parts are given in the annexed table.

The large wheels and rolls are all staked on with 4 or 8 keys, and not bored and turned in the usual manner ; it is believed that more trustworthy work can be done in the former way with heavy gearing, and it offers facilities in erection and repairs. The arrangements for lubrication are necessarily very efficient. It is difficult to estimate the pressure exerted by the top roll, but as its journals occasion-

Table showing the PRESSURES on TEETH and JOURNALS of CANE-MILLS with Rolls 4 feet in Diameter, worked by an Engine indicating 100 H.P., at 30 Revolutions, to give 18·3 feet speed of Roll Surface per Minute.

ORDINARY SYSTEM.					SYSTEM AT ABA-EL-WAKF.				
	Number of Revolutions per Minute	Speed of Pitch Line in Feet per Minute	Load on each Tooth in contact per Inch of Face in lb.	Pressure on nearest Journal in lb.		Number of Revolutions per Minute	Speed of Pitch Line in Feet per Minute	Load on each Tooth in contact per Inch of Face in lb.	Pressure on nearest Journal in lb.
Crank shaft pinion ..	30·00	210·0	557	15,000	For top roll gear ..	30·00	188	414	9,000
					For lower ditto ..	30·00	188	414	
Spur wheel in gear with ditto	6·64	210·0	557	1,500	For top roll gear ..	5·08	188	414	20,000
					For lower ditto ..	5·08	188	414	7,000
Second motion pinion	6·64	72·0	1223	21,000	For top roll gear ..	5·08	36	1,309	29,000
					Double pinion for lower roll ditto	5·08	36	764	27,000
Spur wheel in gear with ditto	1·46	72·0	1223	12,000	For top roll gear ..	1·46	36	1,309	13,000
					For cane ditto ditto	1·46	36	764	35,000
					For begass ditto ditto	1·46	36	764	15,000
Mill pinions on top roll	1·46	18·3	1906	50,000 sideways	Mill pinions. Not represented in System at Aba-el-Wakf.				
Ditto on cane ditto ..	1·46	18·3	1906	51,000					
Ditto on begass ditto	1·46	18·3	1906	25,000					

ally become slightly warm, it is probable that the limit of 1200 lb. per square inch is reached; in that case, the area on the diameter of the two journals being 576 square inches, the pressure would be at least 300 tons. The 4 main cap bolts, 5 inches in diameter under the thread, are competent to carry a working load of 390 tons. The cane-carriers are driven by spur-gear through clutches from the front bottom rolls, and the begass-carriers by belts from the top second-motion shafts.

The very diverse opinions concerning the merits of this system may be briefly summarised. It is conceded that large rolls possess an advantage in the spent cane having less opportunity of reabsorbing the juice, by reason of the greater difference between the feed and delivery sides of the mill; but it is argued that the rolls need only be of sufficient diameter to ensure rigidity (say 28 or 30 inches for rolls 5 feet 6 inches long), and that the extra size of roll requires more power to produce the increased pressure, and crush the extra quantity of cane, necessitating greater expenditure in first cost of plant.

On the other hand, it is contended that it is an advantage for the cane to be a long time under pressure. This time is twice as great in mills with 4-feet rolls, as in those with 2-feet rolls at the same surface speed. The usual rate adopted in the West Indies is 18 feet per minute as the surface speed of the rolls. The Aba-el-Wakf mill runs at 27, 30, and even 36 feet, with equally good extraction, the feed being generally 15 to 18 inches deep. The gearing has advantages in that each pair of wheels is always in true gear with two or three teeth in contact, the load per inch of the width of face is never excessive, and though there are 10 wheels instead of the usual 7, they are smaller and more convenient for manufacture and transit, while weighing in the aggregate 2 tons less.

Repeated experiments have all tended to prove that while only 46 per cent. of the juice is extracted by a speed of 8 revo-

lutions per minute, as much as ·70 per cent. is obtained by the same mill when the speed is reduced to 2½ revolutions per minute.

A comparative account may here be given of the working results obtained with a small rapid mill and a large slow mill upon the estate of Don Miguel Arribas, in Porto Rico, referring, not to a small experiment, but to the working off of a whole year's crop. The cane was all weighed into the mills, and the boiler-power and concentrating apparatus were identical in both cases.

The rapid mill had rollers 22 inches in diameter by 48 inches long, and an average speed of 24 feet per minute, driven by a horizontal engine with a cylinder 12 inches in diameter and 30-inch stroke, the piston making 300 feet per minute, with an average pressure in the boiler of 60 lb.

The slow mill had rollers 36 inches in diameter by 66 inches long, and an average speed of 9 feet per minute, driven by a horizontal engine with a cylinder 22 inches in diameter and 48-inch stroke, the piston making 200 feet per minute, with an average pressure in the boiler of 60 lb., steam being cut off after the piston has travelled ⅝ of the stroke.

Table No. 1 shows the results obtained from one grinding by the rapid mill, with cane in good season, yielding juice of 10° B., and leaving 10 per cent. of woody fibre. No. 2 shows the results obtained from one grinding by the slow mill, with average good canes, a little over ripe and dry, yielding juice of 11° B., and 13 per cent. of woody fibre.

TABLE No. 1.

Quantities	Canes in lb.	Juice in gallons	Juice in lb.	Sugar in lb.	Molasses in lb.	Total Green Sugar
387 loads	1,170,332	65,442	702,092	72,081	37,464	109,545
1 load	3,024	169·1	1814·44	186·25	96·80	283·05
100 lb. ..	100	5·59	59·9	6·16	3·20	9·36
1 gallon	nearly 18	1·00	10·73	1·10	0·572	1·672

TABLE No. 2.

629 loads	1,369,275	98,350	1,063,163	138,750	64,944	203,694
1 load	2,177	156·36	1690·25	220·6	131·67	352·27
100 lb. ..	100	7·18	77·61	10·13	4·74	14·87
1 gallon	13·07	1·00	10·81	1·41	0·66	2·07

The differences of weight (shown in the tables) of the average cart-load during the two grindings require some explanation. During the first grinding, the canes, being cut in good season, weighed somewhat more, volume for volume, than the drier canes cut during the second grinding. The reason, however, consists principally in the irregular cutting of the fields of cane during the second grinding, there being some parts of different fields that, from their very dry state, and being more exposed to wind and dust, required immediate grinding, while the remainder could hold out a few days without serious injury; so that it frequently occurred that, on finishing the cutting of these dry parts, the canes on the ground were not sufficient to fill the carts, hence the lower average weight per load.

From Table No. 1, it will be seen that the rapid mill gave 59·9 lb. of juice per 100 lb. of cane ground; the yield of the slow mill, as shown by Table No. 2, being 77·61 lb. of juice for the same quantity of cane, being an increase of 17·71 lb. per 100 lb. of cane ground. which is equal to an increase on the crop, as made by the rapid mill, of 29·61 per cent. This would be correct if the canes ground in both instances had been the same in quality; this not being the case, a true conclusion can only be arrived at by finding out the saccharine matter obtained and lost in each case. The total amount of saccharine matter obtained by the rapid mill was 9·36 per cent., but there is a loss of 0·268 lb. of saccharine matter per gallon of juice obtained, resulting from the skimmings and washings not being used up, there being no still on the estate.

The gallons of juice per 100 lb. of cane were 5·59; this multiplied by 0·268 = 1·49 lost for each 100 lb. of cane

ground, leaving out fractions of little value, so that 9·36 + 1·49 = 10·85 per cent. of saccharine matter was obtained by the rapid mill from canes yielding juice of 10° B. Canes yielding 90 per cent. of juice of 10° B. contain 18·38 per cent. total saccharine matter, so that 18·38 − 10·85 = 7·35 lb. saccharine matter lost in the begass of each 100 lb. of cane ground in the rapid mill.

Table No. 2 shows that the slow mill has given 14·87 lb. of total sugars per 100 lb. canes ground, with a loss of 0·26 lb. of saccharine matter per gallon of juice obtained, for the reason above mentioned. The gallons of juice per 100 lb. canes, 7·18 × 0·26 = 1·86; that gives 14·87 + 1·86 = 16·73 lb. saccharine matter per 100 lb. of cane ground.

Canes giving 86 per cent. of juice of 11° B. contain 19·20 per cent. total saccharine matter, therefore 19·20 − 16·73 = 2·47 lb. of saccharine matter lost in the begass of each 100 lb. of cane ground.

Lost in begass of rapid mill	7·53 per cent.
Lost in begass of slow mill	2·47 „
Difference in favour of slow mill ..	5·06 per cent.

Which represents a net increase on the crop of 46·6 per cent.

10·85 : 5·06 : : 100 : 46·6 per cent.

The only fuel used in both cases was the begass produced on the estate.

Various advantages are claimed for the De Mornay mill, shown in section in Fig. 27, and it will probably be more widely adopted when better known. In Cuba and Demerara it is unknown; but it has been manufactured for South America by Fawcett, Preston and Co., and worked there with great success. The canes enter between the rolls A B, and are carried onwards by the roll C, inclining upwards until they are grasped by A D. There is no returner-bar to cause abnormal friction and resistance, and no sliding or rubbing of the top roll on a mass of crushed cane. It is stated that this

mill, when properly constructed and proportioned, will grind cane with 50 lb. steam pressure, when the ordinary 3-roller mill fitted with a returner-bar requires 65 lb., or the difference between a 15- and a 20-H.P. engine.

Fig. 28 shows the improved De Mornay mill, and is taken from a drawing of a mill constructed for a large estate in Demerara. The improvements in the De Mornay mill, patented by Messrs. Fawcett, Preston and Co., Limited, of Liverpool, consist of (1) the application of hydraulic cylinders instead of steel springs, a constant pressure being maintained

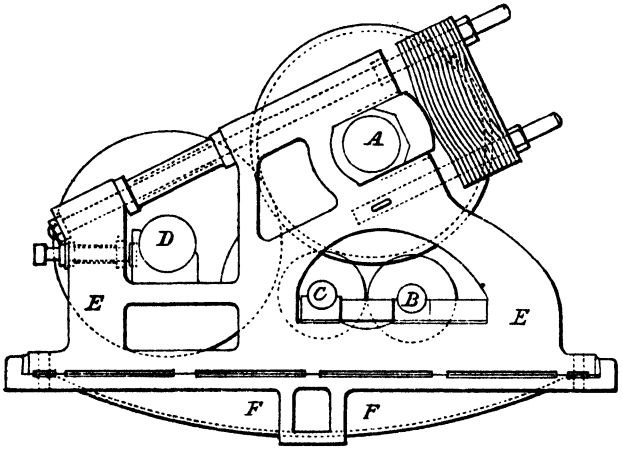

FIG. 27.—DE MORNAY MILL.

on the rams of the cylinders by means of an accumulator; (2) the adoption of through bolts through all the caps, by which all strains are taken up by the wrought-iron bolts, and not by the cast-iron headstocks; and (3) the peculiar construction of the scraper for removing the megass from the main roll. This scraper is brought up over the top of the roll but without touching it, and is then bent downwards till it touches the roll; thus it removes the megass from contact with the roll as soon as possible after crushing, and therefore prevents re-absorption of juice by the megass. This absorp-

tion of juice by the crushed megass presents a very serious loss, the extent of which is now fully appreciated. These mills work well as first crushers and with long canes, but they will not "take" short canes or already crushed canes.

Cane-mills have been constructed with 4 and even 9 rolls. In the 4-roll mill, where 2 rolls are placed above and 2 below,

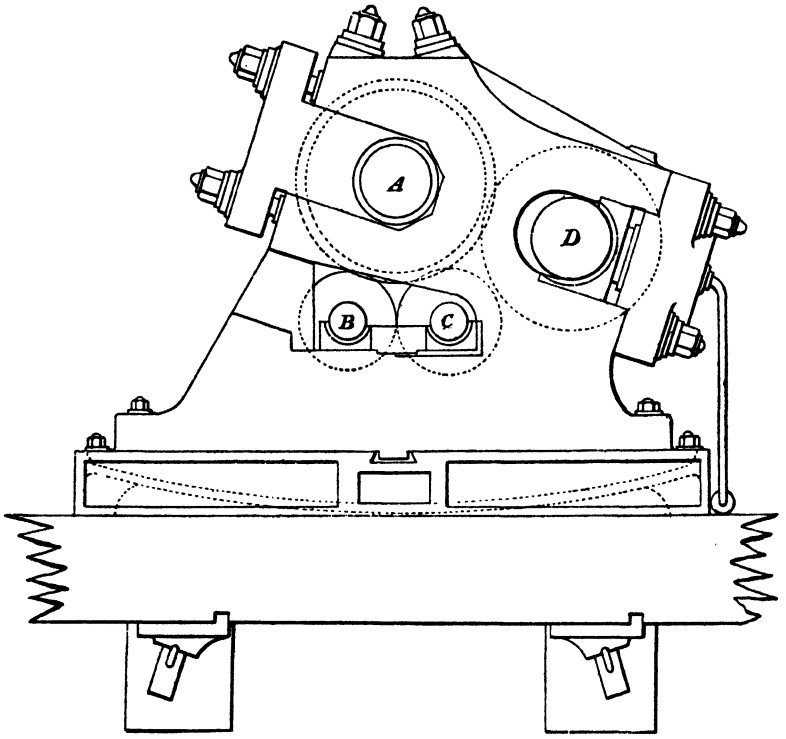

FIG. 28.—IMPROVED DE MORNAY MILL.

the driving power is said to be not much greater than that required for an ordinary 3-roll mill, while more juice is obtained. In the 5-roll mill, 3 rolls are placed below and 2 above; 10 per cent. more juice is said to be extracted by this plan, but much greater power is needed, and the begass is generally more broken up.

In the ordinary 3-roller mill, two pressures are supposed to be exerted in crushing; but in many cases the cane roller is little more than a feeder for the canes, thus leaving the entire grinding or crushing to be virtually done by the begass or back roller at one pressure. In Fletcher and Leblanc's 4-roller mill, as illustrated in Fig. 29, the cane roller fulfils the corresponding duty of a "défibreur," that is, it breaks the

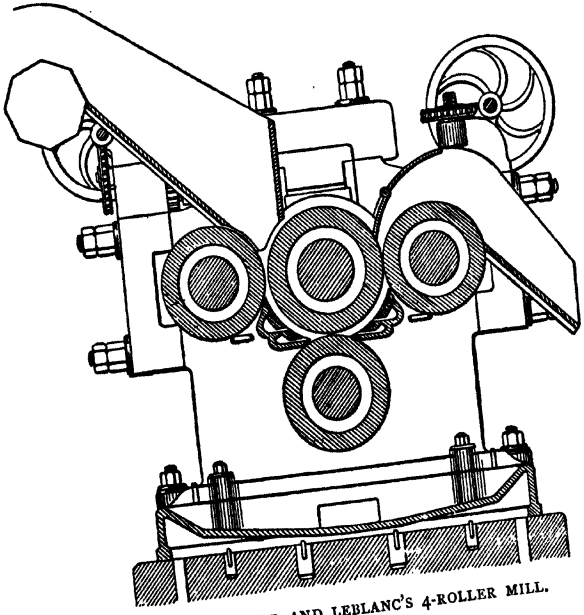

FIG. 29.—FLETCHER AND LEBLANC'S 4-ROLLER MILL.

canes open and reduces them to an even layer, and, following this, there are two distinct and heavy pressures to which the canes are subjected, of sufficient power to extract the highest percentage of juice possible. From this it will be seen that the canes are subjected to three distinct pressures. Further advantages may be obtained by the use of hollow trash turners, by which the begass can be moistened by steam or

water, or both, thus introducing the maceration process. In the 4-roller mill the three outer rollers are made adjustable by means of wedge blocks, which are set up by bolts. The wedge blocks can also be made adjustable by worm-gearing and hand-wheels, so that when the mill is working a "choke" can be avoided. Each roller can be removed without disturbing the others, or taking down the standards; and this mill has also the advantage of having all the principal strains resisted by wrought-iron bolts, consequently it is almost impossible for the standards to break. Should an accident occur to any one roller, and the roller become disabled, the mill could still be used as a 3-roller mill, thus avoiding any delay in grinding. Existing 3-roller mills can be altered to this system by having new standards and an additional roller and shaft, the old bed-plate and rollers being retained; and if the engine and gearing is of modern construction and sufficiently powerful, these may be used, and thus the advantages of double crushing and maceration may be obtained without the heavy expense of an entirely new plant.

A characteristic feature of this mill is that the begass, on its delivery from the mill, forms, from one side to the other of the begass roller, a perfectly homogeneous layer, composed of small pieces some 3 inches, more or less, in length, *so dry* that it may be conveyed at once direct, by the usual appliances, through the hoppers to the furnaces; thus, a fuel of first-class character is promptly provided. Another advantage is that the main roller and the begass roller do not become foul or covered with particles of begass. In fact, the surfaces of the rollers remain clean and almost dry. This arises from the circumstance that the juice proceeding from the third crushing falls, in the form of rain, and is not re-absorbed by the begass, which passes regularly from below. The rollers almost touch, their separation being less than $\frac{1}{16}$ inch. Among the begass are rarely found pieces of cane half

ground, or more or less whole, as invariably happens in mills in common use, particularly towards the extremities of the rollers next the flanges. This mill is made by G. Fletcher and Co., Derby.

Another 4-roller mill is shown in Fig. 30. The chief features are that the main bolts take the strains in a direct line, the trash-turner is dispensed with, and the rollers are connected and driven by gearing wheels of large diameter.

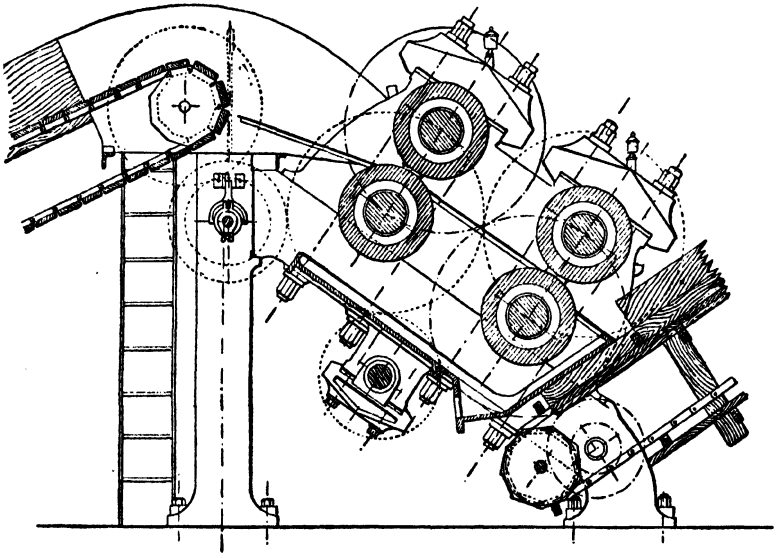

FIG. 30.—MIRRLEES' 4-ROLLER MILL.

Thomson and Black's patent 5-roller cane mill (Fig. 31), as manufactured by Messrs. M'Onie, Harvey and Co., Glasgow, has obtained a very high repute amongst planters and engineers, not only in Brazil, where this type of mill was first adopted, but also in Demerara and Peru, where very large mills of this class are now at work. The arrangement is simply that of an ordinary 3-roller mill, with two auxiliary rolls mounted in front. These auxiliary rolls have their surfaces specially grooved, so that the canes in their passage from

the carrier to the mill proper are thoroughly split up, and the feed is reduced to some degree of uniformity. In regular practice, these mills give an expression of 74 and 78 per cent. of juice, results which go far to make good their claim to superiority.

A recent important addition to cane mills is the application of hydraulic pressure to the rolls, so that the mill can

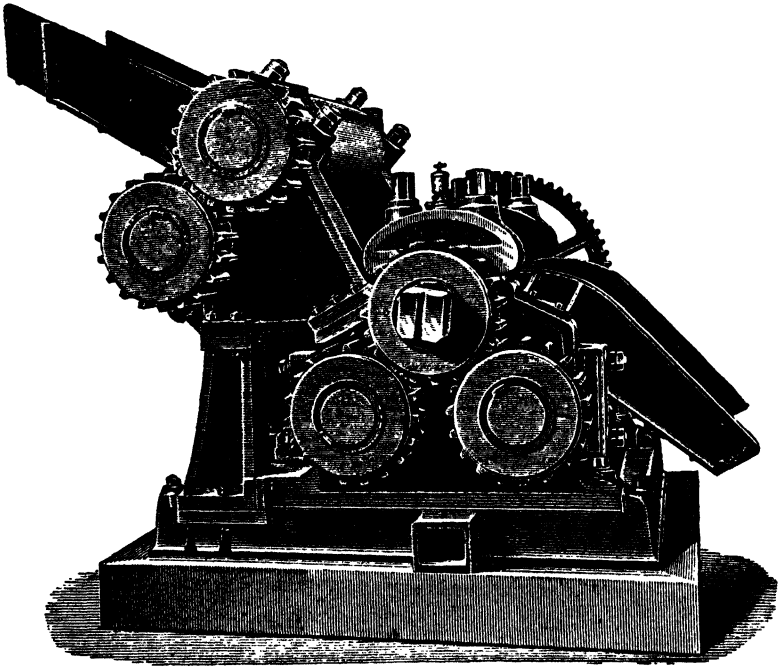

FIG. 31.—THOMSON AND BLACK'S 5-ROLLER MILL.

adjust itself to the inequalities of feeding that are unavoidable. The arrangement adopted by Duncan Stewart and Co. is shown in Fig. 32. The letters indicate the following parts: *a*, small hand pump for charging accumulator; *b*, valves for charging and discharging; *c*, hydraulic accumulator, ram, and cylinder; *d*, weights on cylinder, which is loaded to pressure required on rolls; *e*, steel piping connecting accumulator with cylinders

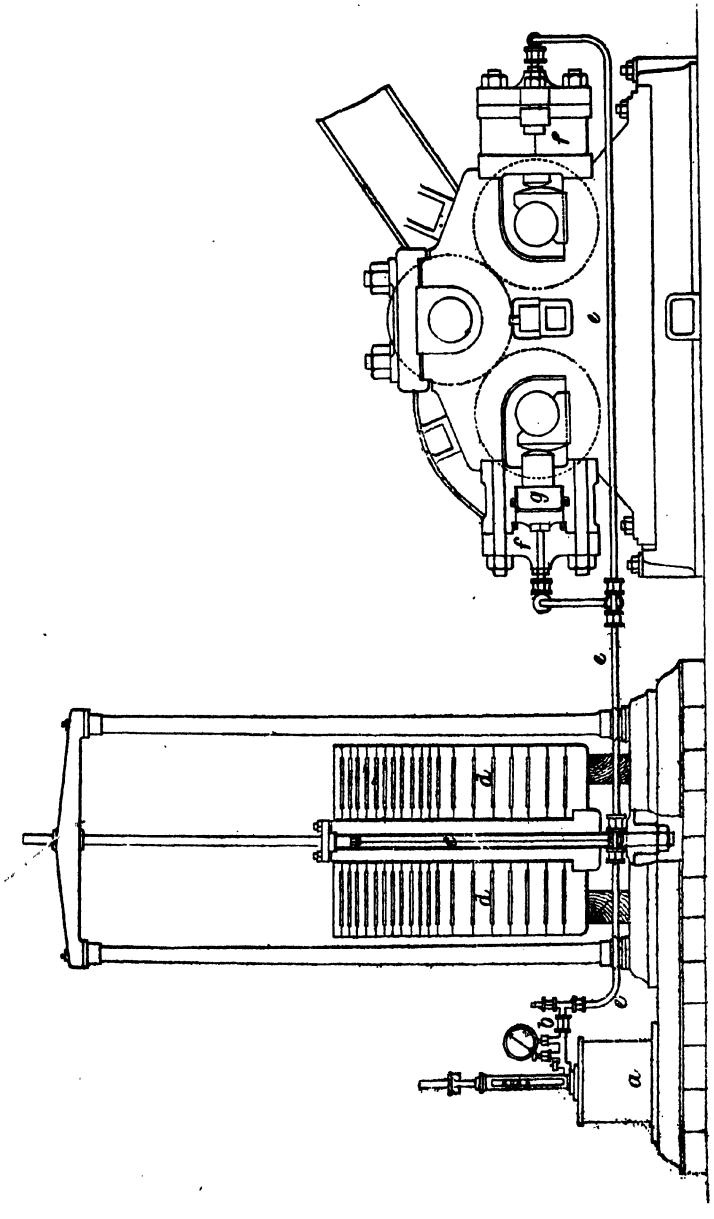

FIG. 32.—STEWART'S HYDRAULIC ATTACHMENT TO CANE MILLS.

on mill; *f*, steel cylinders with rams *g*, which traverse to and fro as canes are fed between the rollers; *g*, cast-iron rams, sheathed with brass to prevent corrosion; *h*, steel tops to limit pressure on top roller, so as to prevent abrasion when mills are running empty.

In applying this attachment, the four screws or wedges, side or top caps, now used in cane mills, are replaced by steel hydraulic cylinders supplied with a fluid (water or oil) under a known pressure, which pressure has been decided upon by experience; once this has been found, the same good results can always be confidently counted upon, and will not be dependent upon the acknowledged great attention which is requisite with ordinary mills, and thus a higher and constant percentage of juice is maintained.

Among the advantages may be pointed out the following:—

1st. A higher percentage of juice.

2nd. The power of maintaining the percentage constant.

3rd. Freedom from breakdowns.

4th. Less attention required to regular feeding.

5th. The power by such equal crushing to regulate the boiler furnaces for burning wet begass.

With regard to the above, it may be remarked that the percentage of juice, by the application of the hydraulic attachment to a mill giving an average of 60–62 per cent. is increased to 66–68 per cent. The increase of juice with mills doing 70 per cent. crushing and upwards is, of course, not so marked; at the same time there always is an increase. Another very important fact in favour of the hydraulic attachment is that the liability to breakage arising from over-feeding, or the introduction of any foreign substance, either accidentally or maliciously, is reduced to a minimum. Less attention is also required to regular feeding, as the rollers open more at one end than the other, should the feed of cane be thin at one side, and thus accommodate themselves to

the irregular feed—in other words, this mill adapts itself to the feed, whilst under the ordinary system the feed has to be adapted to the mill. By means of the improved and uniform crushing, the begass can be burned direct from the mill in the boilers and furnaces as fuel.

With reference to mills generally, it may be mentioned here, that it is now an acknowledged fact, that the sugar cane, in consequence of the difference in composition between the juices of the vascular and of the cellular tissues, does not contain so much sugar as most writers on the subject have credited it with. Formerly, it was almost the universal custom of chemists to calculate the amount of sugar in the whole cane from the amount present in the juice extracted, by assuming that that left in the begass possessed the same composition. This method must now be given up, as it shows more sugar in the cane than there actually is, because, as has been shown by Francis, Alexander, and Harrison, the juice left in the begass does not contain the same percentage of sugar as is present in the quantity of juice usually expressed by a mill. This fact is of much importance and interest to advocates of the mill, as it proves that a greater percentage of sugar is extracted from the cane by its use than was hitherto supposed. It ought to give much satisfaction to many to learn that with a thoroughly well proportioned and strongly geared mill fitted with the hydraulic attachment, it is now quite a simple matter to maintain an expression of 74–78 per cent. of juice, and further, that this amount of juice contains from 90 to 94 per cent. of the sugar in the cane—a result which approaches anything that has yet been done in a diffusion battery.

The hydraulic attachment for mills, as made by Manlove, Alliott and Co., Nottingham, is illustrated in Fig. 33.

Amongst experienced sugar planters the fear is frequently expressed that when 6- or 9-roll mill sets, or two 3-roll or three 3-roll mills are driven by one engine, there is a great

probability that the power of the engine, which, of course, must be sufficient to drive the three mills with full feed, may, in case of irregular feeding, become concentrated on one mill, and consequently result in frequent breakdowns. Practical experience makes it desirable to avoid any such a concentration of power on one mill, and the way out of the difficulty is the "hydraulic attachment" of Manlove, Alliott and Co., of Nottingham, England, which consists essentially of a hydraulic cylinder and ram, employed instead of the ordinary

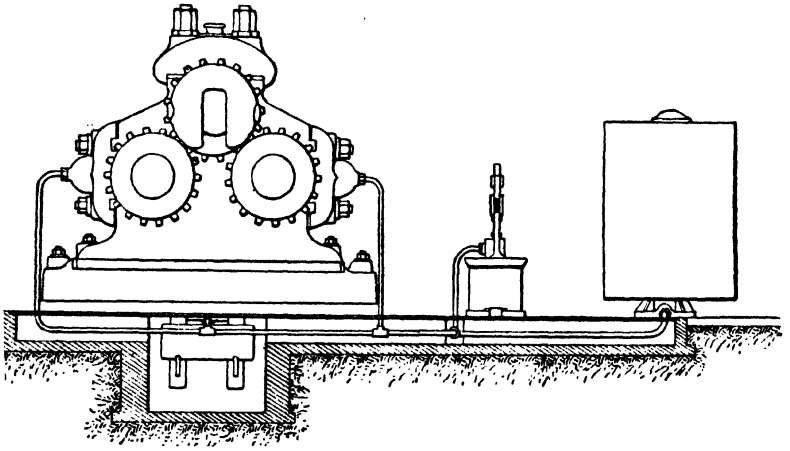

FIG. 33.—MANLOVE'S HYDRAULIC ATTACHMENT.

cap to hold down the bearings for the top roller shafts. The hydraulic cylinder is arranged in connection with an accumulator, and pressure is put on by means of a hand pump. When the pressure is once up, the pump only need be used occasionally to make up any leakage there may be. In this way it is practically impossible to concentrate more than a proper amount of power upon any one of the three mills, owing to the fact that if an extra thick feed, or anything extra hard—such as a crowbar, etc.—comes between the rolls, the hydraulic ram retires a little into the cylinder and the accu-

mulator weights are lifted. The whole arrangement acts as a sort of safety valve, and there is a separate one, as shown in Fig. 33, on each of the three mills. This method of loading the rolls by means of hydraulic pressure has the further advantage of keeping a constant pressure upon the cane, and thin and thick feeds receive the same pressure. The power of regulating the pressure on the top roll is also valuable, as it is possible to vary the pressure to suit different classes of cane or thickness of feed, so as to give the very best crushing results.

At the Glasgow International Exhibition was shown a new gear which accomplishes the same result as the hydraulic attachment in a simpler and ruder fashion, by means of springs acting on "toggle" levers; and whilst it is applicable to almost any sugar mill, it is specially suited to those of such moderate size as not to justify the cost of the more expensive hydraulic apparatus, or where the necessary skilled attention is not available; and the makers claim for it every advantage offered by the hydraulic gear, together with others which the latter system does not afford. The principal points may be summarised as follows:—

1. The first cost is much less than that of the hydraulic apparatus, and the expense for erection and upkeep is only nominal.

2. Owing to its simple construction, it does not need skilled attention.

3. No additional space is needed, and no pipe connections. The apparatus is compact and self-contained, and as soon as placed on the mill it is ready for work.

4. The degree of pressure on the roller is readily adjustable, by turning the nuts compressing the springs.

5. The pressure on the gearing end of the roller may be varied to the extent necessary to compensate for the thrust of the pinions.

6. The volute springs adopted are similar to those largely

used for the buffers of locomotives and other rolling stock, where the work is far more severe than in the present application. It may therefore be reasonably expected that the springs will retain their full efficiency for a long time; but, as their cost is small, the makers advise spare springs being sent with each apparatus, enabling an injured spring to be replaced in a few minutes.

7. Particular attention is directed to the compensating action of the "toggle" levers, which is the special feature of this invention, and enables springs to be used without the disadvantages which have hitherto prevented their application. It will be observed that the action of the parts is such that the springs when least compressed, and therefore exerting their minimum thrust, are acting at the greatest leverage, and *vice versâ.* It results from this peculiar action that by the selection of a suitable spring the load on the journal may, if desired, be made uniform for the whole distance through which the roller lifts, in this case exactly reproducing the effect of an hydraulic cylinder; but the makers prefer to take advantage of the facilities afforded to proportion the springs so as to give a pressure increasing slowly as the roller rises, this being considered advantageous.

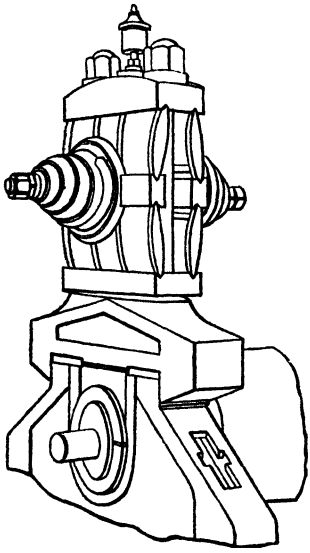

FIG. 34—TOGGLE GEAR.

The apparatus (Fig. 34) is readily applicable to any mill of the ordinary construction.

Motors, Fuels, and Furnaces.—Though not perhaps strictly in chronological sequence, this seems a convenient point at which to introduce the questions of the relative advantages of

the various kinds of motive power, and the various kinds of fuel, as well as to describe furnaces constructed specially for the purpose of burning the begass.

With regard to the suitability of the several kinds of power for driving cane mills, it has been ascertained, by comparing the results of 44 mills in Guadeloupe, that—with windmills of inferior construction, the cane mills extracted only 50 per cent. of juice; with ordinary windmills, 56·4 per cent.; with animal power, 58·5 per cent.; with water power, 59·3 per cent.; with steam power, 61·8 per cent. The reasons for these differences probably lie in the following facts: Wind power is least efficient because most subject to variation, while the others increase in capacity apparently in direct ratio to the working force they possess in excess of what is constantly demanded of them, thus preventing those repeated stoppages or slackenings of speed which are sure to occur when the power is not sufficiently in excess to overcome the checks arising from unequal feeding. Wind-engines might be made more available in many places by the intervention of modern electrical engineering, so as to equalise the power. Cattle-mills and water-wheels are in wide use; where a good head of water is obtainable, and the mill is properly constructed, water-power will probably be found to fall very little short of steam-power, while possessing the great advantage of very much reduced cost, particularly where fuel is scarce or dear.

Fig. 35 shows in elevation and plan an economical combination of a vertical beam-engine arranged so as to work two large air-pumps, and with power enough to drive the cane mill at the same time. This style of engine is applicable when the sugar-factory is organised so as to run day and night, as all should to work profitably. It is evident that by using one large engine instead of three (one each for the cane mill, the triple-effect, and the strike-pans), much loss by friction and expense of attendance are saved. In the figure, E represents an entablature carrying the beam A, mounted by 8

columns on the bed-plate C; H are two large air-pumps in connection with the triple-effect and vacuum-pan; a massive fly-wheel G is necessary to secure regularity of motion.

The use of coal and wood as fuel needs no remark. Arguments for and against the burning of the begass as a source of heat have been already put forward (see pp. 46, 47). As

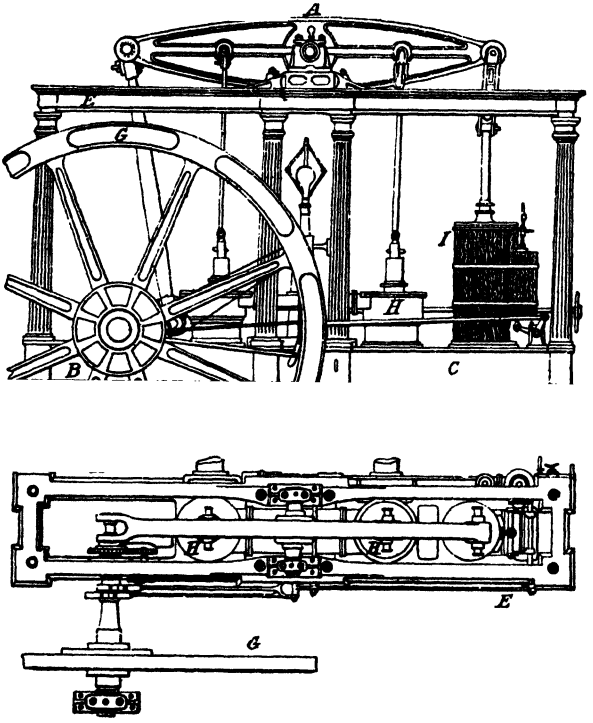

FIG. 35.—CANE-MILL ENGINE.

begass continues to be very largely consumed as fuel, it will be interesting to give here some figures concerning its evaporating power.

R. T. Burwell, in a paper read before the Louisiana Sugar Planters' Association in 1896, gives the following account of the value of begass as fuel.

The term begass is generally understood to mean that portion of the cane left after extracting the juice, and as the methods of securing this extraction give results varying all the way from 40 to 80 per cent., it is seen that it includes substances varying greatly in composition. Taking it in the broad sense, it usually means the refuse discharged from the cane mill or diffusion process, whether it comes from a mill giving 40 per cent. extraction and contains 70 per cent. of moisture, or whether it be the air-dried begass of the tropics with only 10 per cent. of moisture.

From experiments by Dr. W. O. Atwater on begass using a bomb calorimeter, the thermal units developed per pound of dry matter were found to be approximately the same whatever the amount of moisture contained in the begass. A 1 lb. sample of purple cane exhaust chips direct from the diffusion battery, and containing 90·36 per cent. of moisture, was capable of developing 779 British thermal units; but as the dry matter here is only 9·64 per cent., a pound of dry matter should give 8288 British thermal units. The average figure found was 8325 British thermal units per pound of dry matter. To find the amount of heat that a pound of wet begass will develop, it is only necessary to multiply 8325 by the percentage of dry matter; to determine the heat available for generating steam, however, we must deduct from this product the amount of heat required to raise the water present into steam at atmospheric pressure, and at the temperature of the gases leaving the boiler. Let us take for example diffusion begass after it has been passed through a mill and containing 50 per cent. of moisture; in every pound we have only ·5 pound dry matter, which has a heat value of $8325 \times \cdot 5 = 4162$ British thermal units, and this must first do the work of evaporating the other ·5 lb. water. If the begass have an average temperature of 80° F., and the temperature of the gases as they leave the boiler be 420° F., there will be required for every pound of water in the fuel

1198 British thermal units; hence the ·5 lb. water acquires 599 leaving only 3563 British thermal units as available heat. To express this in terms of coal, we may take Pennsylvania bituminous coal as having a value of 14,000 British thermal units, and we have 14,000 ÷ 3563 = 3·93 lb. diffusion begass of 50 per cent. moisture, equivalent to 1 lb. of coal. Calculation shows that the temperature of the fire in this case would be 1870° F., while of dry begass 1·68 lb. would be equivalent to 1 pound of coal and the temperature of the fire, 2465° F.

Let us now consider mill begass. This varies greatly in composition according to the degree of extraction. The only method as yet available to us in estimating the fuel value for the different extractions is that based upon the assumption that begass consists of two substances—fibre and juice—and that this juice has the same composition as that extracted. We do know that this is not actually the case, but the error arising from such an assumption is undoubtedly very small. We have already adopted a fuel value for fibre, but to obtain one for juice we shall have to make a further subdivision into sugar and molasses. To illustrate this, let us take as an average cane one of 10 per cent. fibre and containing juice of 12 per cent. sucrose, 2 per cent. glucose, and 1 per cent. solids not sugar, making the total solids amount to 15 per cent. 100 lb. of such cane passed through a mill giving an extraction of 75 per cent. upon the weight of the cane will furnish 25 lb. begass containing 10 lb. fibre and 15 lb. juice, of which 2·25 lb. will be total solids and 12·75 lb. water, but two-thirds of the total solids, or 1·5 lb., is to be reckoned as sugar, since it is considered impracticable to reduce the percentage of sucrose in the molasses below that of the glucose, there will thus remain ·75 lb. of molasses (dry matter only). In other words, the begass consists of water 51 per cent., fibre 40 per cent., sugar 6 per cent., and (dry) molasses 3 per cent.

The average of calorimetric tests made by Dr. Atwater upon mill and diffusion molasses gives 6956 British thermal units per pound of dry matter, and according to the same authority, sugar has a calorific power of 7223 British thermal units per pound. Thus 1 lb. of the begass has a fuel value $= \cdot 40 \times 8325 + \cdot 03 \times 6956 = 3972$ British thermal units, but from this we must subtract $1198 \times \cdot 51 = 611$ British thermal units necessary to drive off the water present. This leaves us available heat for generating steam 3361 British thermal units, which, compared with our standard coal, gives 4·17 as the coal ratio. Now, let us see how much fuel a ton of cane should yield under these conditions; the 75 per cent. extraction leaves us 500 lb. begass, which should be equivalent to $500 \div 4 \cdot 17 = 120$ lb. coal. The table below gives similar results calculated for a number of extractions. From the table we see that the fuel value of begass from a ton of cane, according to our methods of calculation, remains practically the same for all extractions, the slight increase that we find being due to the greater amount of the total solids of the juice left at the lower extractions, which evidently more than compensates for the heat necessary to evaporate the water from the begass. While dry begass will burn with readiness and, even under poor economy, is capable of evaporating four time its weight in water; begass containing this amount of water will positively refuse to burn. We are, therefore, led to the conclusion that the practical value of fuels containing varying percentages of moisture cannot be adequately expressed in terms of another by simply comparing their calorific power. Any increase in moisture decreases the temperature of the fire and this decrease finally reaches a point at which the gases leaving the fuel refuse to ignite.

The theoretical amount of air necessary for the combustion of 1 lb. of dry fibre is $6\frac{1}{3}$ lb., for 1 lb. of sugar $4\frac{7}{8}$ lb., and for 1 lb. of dry matter in molasses $4\frac{2}{3}$ lb. Fuels burned under average conditions require about twice the theoretical amount

Value of One Pound of Mill Begass at different Extractions. Upon Cane of 10 per cent. Fibre and Juice of 15 per cent. Total Solids.

Per cent. Extraction on Weight of Cane	Per cent. Moisture in Begass	Fibre		Sugar		Molasses		Total Heat Developed. B.T.U.	B.T.U. to evaporate Water present	Heat available, B.T.U.	Pounds Begass to equal 1 ton Coal	Coal Equivalent per ton Cane, lb.	Temperature of Fire, ° F.
		Per cent. in Begass	Fuel Value, B.T.U.	Per cent. in Begass	Fuel Value, B.T.U.	Per cent. in Begass	Fuel Value, B.T.U.						
90	0·00	100·00	8325	..	..	..	..	8325	..	8325	1·68	119	2465
85	28·33	66·67	5550	3·33	240	1·67	116	5900	339	5561	2·52	119	2236
80	42·50	50·00	4162	5·00	361	2·50	174	4697	509	4188	3·34	120	2023
75	51·00	40·00	3330	6·00	433	3·00	209	3972	611	3361	4·17	120	1862
70	56·67	33·33	2775	6·67	482	3·33	232	3489	679	2810	4·98	120	1732
65	60·71	28·57	2378	7·15	516	3·57	248	3142	727	2415	5·80	121	1612
60	63·75	25·00	2081	7·50	541	3·75	261	2883	764	2119	6·61	121	1513
55	66·12	22·22	1850	7·78	562	3·88	270	2682	792	1890	7·40	121	1427
50	68·00	20·00	1665	8·00	578	4·00	278	2521	815	1706	8·21	122	1350
45	69·55	18·18	1513	8·18	591	4·09	284	2388	833	1555	9·00	122	1284
40	70·83	16·67	1388	8·33	601	4·17	290	2279	849	1430	9·79	123	1222
25	73·67	13·33	1110	8·67	626	4·33	301	2037	883	1154	12·13	124	1077
15	75·00	11·77	980	8·82	637	4·41	307	1924	899	1025	13·66	124	1002
0	76·50	10·00	832	9·00	650	4·50	313	1795	916	879	15·93	126	906

of air, and these figures have been adopted in the estimation of the temperatures of combustion given in the table. The temperature of 2465° F. given for dry begass corresponds very closely to that acquired in practice with other fuels, but for the lower extractions they are evidently much too high.

One authority states that carbon monoxide gas will not burn until it reaches 1472° F., and the hydrocarbons require 1292° F. It would thus appear that the burning of begass below 45 per cent. extraction is attended with very incomplete combustion; it is, therefore, necessary to dry the begass by contact with the furnace gases before it reaches the incandescent fuel to obtain economical results.

Mr. G. Shaw obtained the following data as a result of a six hours' trial on 500 H.P. Stirling boilers, equipped with Burt begass furnaces and Gordon grates; grate surface, 120 square feet, water-heating surface 5174 square feet, heating surface per H.P. developed 7·96 square feet. Steam pressure in the boiler 75 lb., draught suction in indicator 0·5 inch, in furnace 0·2 inch, feed water 68° F., flue gases over 600° F.

Total amount of begass consumed, 77,500 lb.

Water evaporated, after deducting for 0·6 per cent. of moisture in steam, 113,477 lb. equivalent of water evaporated into dry steam from and at 212° F., 134,403 lb., or at the rate of 1·764 lb. per pound of begass. The H.P. developed was 649·29, on a basis of 30 lb. water evaporated from temperature of 100° F. to steam of 70 lb. gauge pressure.

The amount of cane ground during the test was 155 tons, and the extraction 75 per cent.

A comparison of the relative values as fuel of coal, petroleum and begass under conditions prevailing in the Sandwich Islands is made by Mr. E. P. Jones who states that 1 lb. of begass, coal and oil will evaporate respectively 2·35, 7·50 and 13·00 lb. of water.

At Cairo, the consumption of begass by a 10-H.P. portable engine was found to be 17·77 lb. per H.P. per hour, which,

and Co., of Nottingham. Fig. 37 represents a longitudinal vertical section and horizontal section respectively of the begass furnace, while Fig. 38 illustrates the application of the begass furnace to the fire-box of a locomotive boiler.

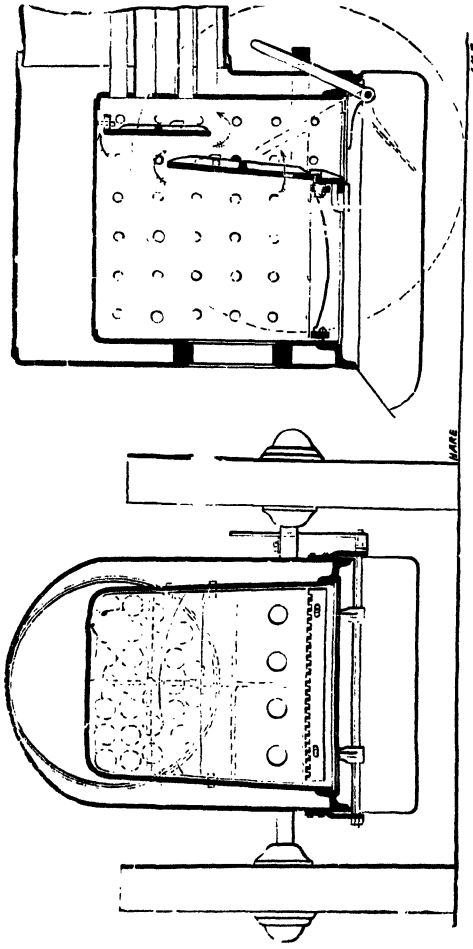

FIG. 36.—RANSOMES' BEGASS BURNER.

The furnace chamber A is constructed preferably of cast-iron plates *a* stiffened by ribs *b*, bolted together by flanges *c*, and encased in brickwork. The pyramidal crown B of the

furnace chamber is also constructed of cast-iron plates, bolted upon chamber A, and surmounted by the hopper C, in which the begass is dried, and through which it is fed to the furnace. A self-acting balance-door or valve D is placed within the hopper in the inclined position shown; it works on pivots at *d*, supported in the sides of the hopper, one of them having a lever arm *e* fixed to it outside the hopper, upon which is placed a counterweight *f*, adjustable along the arm *e*, to regulate the quantity of begass admitted each time the door opens. The

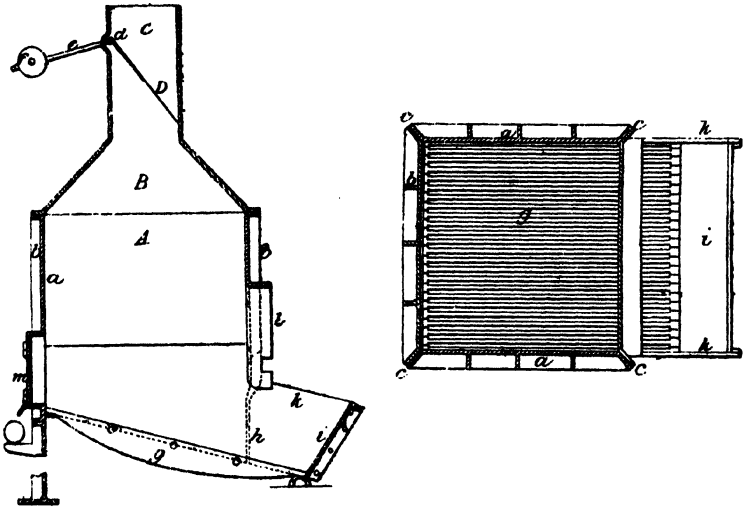

FIG. 37.—MARIE'S WET BEGASS BURNER.

fire-bars *g* at the lower part of the furnace are inclined as shown, and their lower ends extend through an opening *h*, and are supported by an inclined bridge *i*, bolted to extensions *k* of the side walls of the furnace. The upper part of the opening is surrounded by a flange *l*, which may fit to the doorway or beneath the fire-box of the boiler, the form and dimensions of the said flanged opening or throat being varied as circumstances may require. The doors *m* just above the fire-bars give access to the furnace.

As shown in Fig. 38, the chamber A and crown B would be encased externally in brickwork, and the sides *a*, or their most exposed parts, would be lined internally with fire-brick or fire-clay; the walls *n* which support the boiler may also be faced with fire-brick. The begass furnace is here shown supported at front on feet, and at back upon a wrought-iron girder *p*, whose ends are built into the walls that support the fire-box *s* of the boiler. The lower part of the boiler fire-box is completely closed by brickwork *r*, supported on girders built

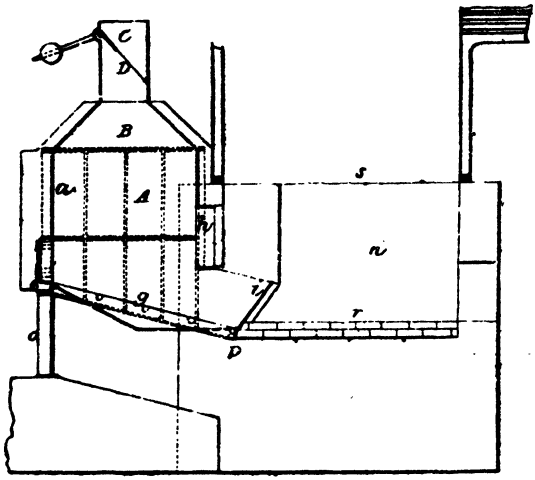

FIG. 38.—MARIE'S WET BEGASS BURNER.

into the same side walls; and the interval between the begass furnace and the fire-box being also built up, the whole of the air to support combustion must come in through the fire-bars *g*.

Although exterior to the boiler, this begass furnace has greater heating power than an internal furnace, as begass coming wet from the mill requires to be dried to render it fit for fuel, and receives its preliminary drying in this external furnace. A coal fire having been first lighted in the furnace A, its walls become highly heated; the wet begass is then fed in through the hopper C, whose balance door D opens to

give passage to and spread the begass uniformly upon the grate *g*, the door D closing again immediately to re-establish the natural draft through the grate. The flame of the fire immediately envelops the fresh fuel, and owing to the high temperature in the furnace, the gases at once begin to be liberated. As the surfaces of internal boiler furnaces do not exceed the relatively low temperature of the surrounding water, a great part of the gases is carried off unconsumed, and becomes partly condensed on the cooler surfaces, and partly passes away in the form of dense smoke; whereas in this furnace, the heat which in the former case would go to heat the water, is stored up in the walls of the furnace, which quickly become hot enough to almost instantly dry the begass, and render it eminently fit for burning. As all the gases are compelled to pass through the mouth or aperture leading to the boiler furnace *s*, perfect combustion is ensured, and there is little or none of the usual deposit in the boiler tubes.

The advantages of a furnace which will burn wet begass are not confined to the mere saving of the time and outlay required for drying, but extend to the equally important gain represented by the avoidance of that risk of fire, which is so constantly to be feared when begass is stored in large quantity, and by the utilisation of the combustible qualities of the saccharine matter left in the canes, before it is destroyed by fermentation. The furnace is simple to construct and manage, and little likely to get out of repair. It is independent of the fireplace to which it is desired to attach it, and has been very successfully applied not only to the boiler furnaces for the cane mills, but also to the "copper walls" for making muscovado sugar.

Norbert Rillieux, of Paris, has also devised a plan for effecting the drying of the begass on its way to the furnace. The apparatus is shown in elevation and plan in Fig. 39. The begass in its wet state is delivered by the elevators *a* into the hopper *b*, leading at bottom into a chamber communi-

cating with the furnace *c* of the steam-boiler *h* employed. In this hopper is a hinged horizontal flap *d*, on to which the begass falls, and which is held in place by a balance-weight till the load accumulated upon it over-balances the weight, when the begass is discharged down into the chamber and passes into the furnace to be burnt, the flap being closed again by the balance-weight. While the begass is retained in the hopper, and descends through the chamber, it is subjected to currents of hot gases from the furnace, so as to become dry before passing into the fire. The hot currents

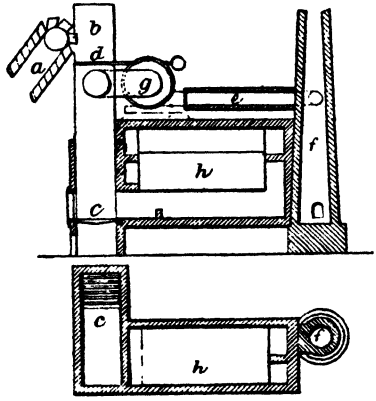

FIG. 39.—RILLIEUX'S BEGASS DRIER.

may be accelerated by connecting the hopper by a pipe *e* with the chimney *f* of the boiler, the draught being regulated by a throttle-valve; and if required, a blowing-fan *g* may be provided in the pipe, and regulated so as to produce the required degree of desiccation in the begass.

The begass burner of M. G. A. Godillot, Fig. 40, is described as a furnace with systematic combustion for burning wet begass just as it leaves the mill and without any previous drying, and keeping the boilers going as well as with coal. It is formed of a grate D, in the form of a half cone, the bars being arranged so that nothing can fall into the interior. This grate

rests a little above a flat annular grate just over the ash-pit C. The whole is enclosed in a brickwork furnace communicating with the boiler. A worm A, with conical body and enlarging web, feeds the begass, which is supplied to the hopper in which it works. The feed can be regulated at will. Air enters at G, at the top of the furnace, and circulates through passages arranged in the brickwork, reaching the fuel from

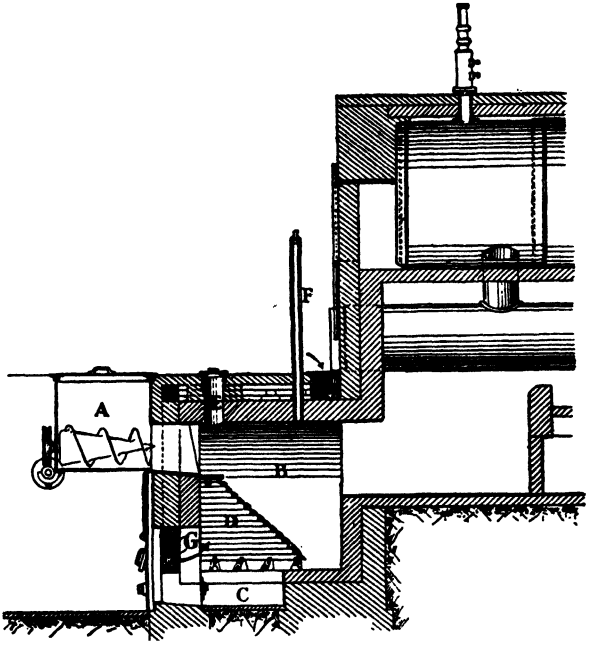

FIG. 40.– GODILLOT'S BEGASS FURNACE.

beneath the grate. An opening, E, is for kindling, and a sight, F, for supervision.

The begass which reaches the top of the conical grate, pushed on by the continuous feed of fuel behind, becomes dried and takes fire as it passes down the conical slope, combustion being complete as it reaches the bottom of the grate.

It may be assumed that a pound of begass from the mill, containing 50 per cent. of moisture, will evaporate over 2 lb.

of water from 15° C. to 60 lb. pressure; so that without previous drying and without any extra fuel, either wood or coal, the begass produced daily is sufficient to carry on the factory when the imbibition is not excessive.

Cane chips from the diffusers are passed through one of the mills lying idle, or preferably between specially arranged rollers, and the greater part of the water being removed, a begass is obtained with 60 per cent. of water. This serves to keep the boilers active.

Defibrators.—The imperfect liberation of the cane-juice by the crushing process of the ordinary mill has led to experiments in other directions. One result has been the invention of machines for effecting a more thorough mechanical disintegration of the cane tissue.

In the Bazé defibrator the canes, which are fed parallel to the axis of the cylinder, are broken in the angle of a V-shaped grating by a series of projecting teeth arranged on the cylinder in a slightly oblique line.

The "National" cane-shredder used in Cuba consists of two cylinders formed of a number of toothed wheels which decorticate the cane on its passage to the mill.

The "Krajewski" cane breaker is now too well known to require any exhaustive description of its merits.

In brief, the object of the apparatus which is placed in front of the cane crushing mill, is to prepare and regulate the feed of the canes to the mill, by thoroughly breaking and splitting them up, the helical tooth surface of rollers enabling this to be completely attained, likewise allowing about 30 per cent. more canes to be dealt with, and a higher percentage of juice extraction got, owing to the breaking up and even feed of canes to the mill.

Generally, the apparatus consists of a pair of cast steel rollers, having their surfaces fluted zigzag with helically-shaped teeth suitable for seizing and breaking up the canes, fitted on to steel gudgeons, which run in hard gun-metal

bearings that are carried in strong cast-iron headstocks. Spring pressure-regulating apparatus is fitted to top or bottom of cheeks as found most suitable.

It is advisable for the Krajewski to have an independent engine—which allows of regulating the speed—with spur driving gear, but sometimes one engine is made to drive both mill and Krajewski with the necessary arrangement of spur gearing for same.

This apparatus can be applied to any existing mill, as the headstock or connecting frames are made suitable for bolting on to cane mill headstock, and experience has shown that the saving effected by adopting the Krajewski very soon repays the outlay.

This is a matter of very great importance in the direction of cheapening the production of sugar, and which is gradually being recognised by the sugar-producing world.

Fig. 41 is from a photograph of a 24-inch Krajewski cane-breaker, with independent engine and gearing complete, supplied by the Mirrlees Watson Co., Ltd., Glasgow, to a large sugar estate in the West Indies.

These crushers are made from 20 inches to 26 inches diameter with lengths varying to suit the different length of crushing mills.

Maceration.—It has been sought to facilitate the extraction of the juice from the cane by submitting the cane to the action of water or steam, either before the crushing operation in the roller mill, or at an intermediate stage between two such crushings. It seems to be an undecided point whether the saturation or the extra crushing should be credited with the increased yield of juice. Probably both assist; but it has been proved that the return of juice is raised from 60 per cent. to 75 per cent. by previously slicing the canes longitudinally, without any application of water or steam.

Several methods have been devised for carrying out the saturating process on a practical scale, among which the

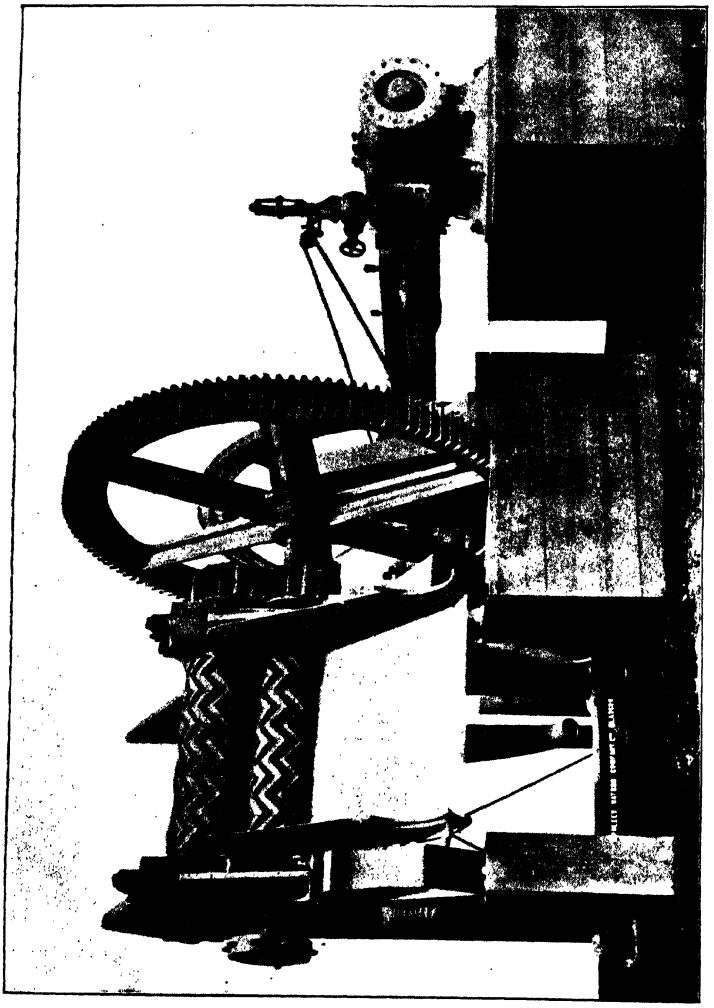

FIG. 41.—KRAJEWSKI CRUSHER.

most important are (1) Duchassaing's, and (2) the combined invention of W. Russell and G. W. Risien, of Demerara. They are generically known as "maceration" or "imbibition" processes.

The apparatus employed in Duchassaing's process is shown in Fig. 42. The mill *a* receives the canes and crushes them, giving 68 per cent. of juice. The begass falls upon an endless cloth *b*, which conducts it to a second mill *c*; *d* is a tank

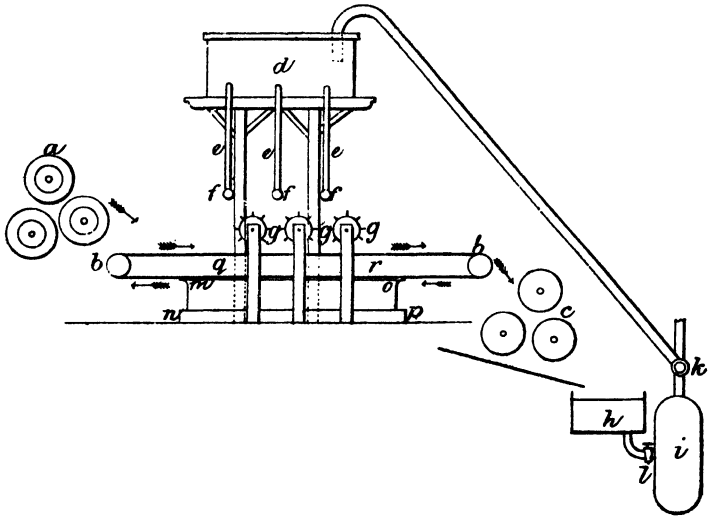

FIG. 42.—DUCHASSAING'S MACERATOR.

containing boiling water; *e* are tubes terminating in pipes *f* parallel to the endless cloth, which sprinkle water from the tank *d* upon the begass passing from the first to the second mill; *g* are beaters which turn the begass and thus equalise the imbibition; *h* is a tank which receives the juice from the mill *c*; *i* is a *monte-jus* which sends this juice, if its density is not sufficiently great, into the tank *d*, to serve for a second maceration of new begass, or, if it is dense enough, by the joint *k* to the defecation. The endless cloth *b* dips so that

the portion between *q r* immerses the begass in boiling water contained in the vessel *m n o p*, thus increasing the maceration. Since the apparatus has come into extensive use, it has been simplified by dispensing with the beaters *g* and the vessel *m n o p*. This system raised the yield of sugar from 9·40 per cent. on the cane to 11·04 per cent. ; it received an award of 4000*l.* from the General Council of Guadeloupe in 1876.

In Russell and Risien's process, 2 mills are used, and they are connected by an intermediate chamber, in which runs an endless band or other suitable contrivance for carrying the partially exhausted canes from the first to the second mill for further treatment.

The mills may be placed at a distance of 30 feet (more or less) apart; and the chamber, extending from mill to mill, is in the form of a shoot or covered trough. Inside the chamber, and near the top, is placed a system of perforated piping, by which cold or hot water or cane-juice may be thrown, in a spray, upon the partially exhausted canes ; and between the endless band is placed a second series of perforated pipes, used to drive steam through the endless band, and, mixing with the water or cane-juice, saturate the partially exhausted canes. The juice from the first mill, after passing through a sulphurous gas churn, is forced through a set of combined juice-heaters and water-traps, and the condensed water and steam from the water-traps is conducted to the piping before described at the top of the chamber for saturating purposes. The begass, being conducted from the first mill to the second by the endless band, is thoroughly saturated by this condensed water, and is further treated by steam from the lower pipes passing up through the band, which steam also serves to cleanse the band. When the begass reaches the second mill, the water that it has absorbed by saturation is expressed from it, and carries with it the soluble matters contained in the cells of the cane. The begass is carried away from the second mill for fuel or manure.

The juice obtained by this second treatment is carried through a separate set of juice-heaters, heated by the exhaust steam from the engine driving the second mill. This juice, after passing through the heater, may be mixed with the juice from the first mill, or it may be conducted into the piping in the chamber and used for saturating the begass as it circulates, thus absorbing a larger proportion of saccharine matter; it is eventually conducted, when of sufficient strength, to augment the supply from the first mill.

In some cases, the juice from the second mill is sent direct into a second set of clarifiers, mixed with scums and other washings of sugar works, treated with an excess of lime, and afterwards by carbonic acid gas. The juice and washings at this stage must not exceed 5° B.

The juice, after "carbonation," is decanted and mixed with the juice from the first mill, and made direct into "first" sugar, or mixed with the molasses from the first boiling to make a superior "second" sugar, as, in the present method of making "second" sugar, a large quantity of water has to be used in diluting the molasses before boiling. The residu e after decanting, may be forced through filter-presses, so as to deprive it of all juice.

It is claimed for this system that, by an addition of water equal to 50 per cent. of the original cane-juice, a gain of at least 25 per cent. on the sugar now extracted from the cane by the most improved mills is obtained; that is to say, if the original cane-juice is 100 gallons, and there are added 50 gallons of water by saturating the begass in its transit from the first to the second mill, the result will be 50 to 60 gallons of additional juice, which in richness is equal to at least 25 gallons of the original juice.

The apparatus is illustrated in Figs. 43, 44, and 45.

Fig. 43 shows a side elevation of the first cane mill, saturator, first juice heater, second cane mill, first heater for second juice, and second heater for second juice; Fig. 44

is a plan of Fig. 43 ; Fig. 45 shows the details of the saturator box. The first mill *a* and second mill *b* are about 45 feet apart

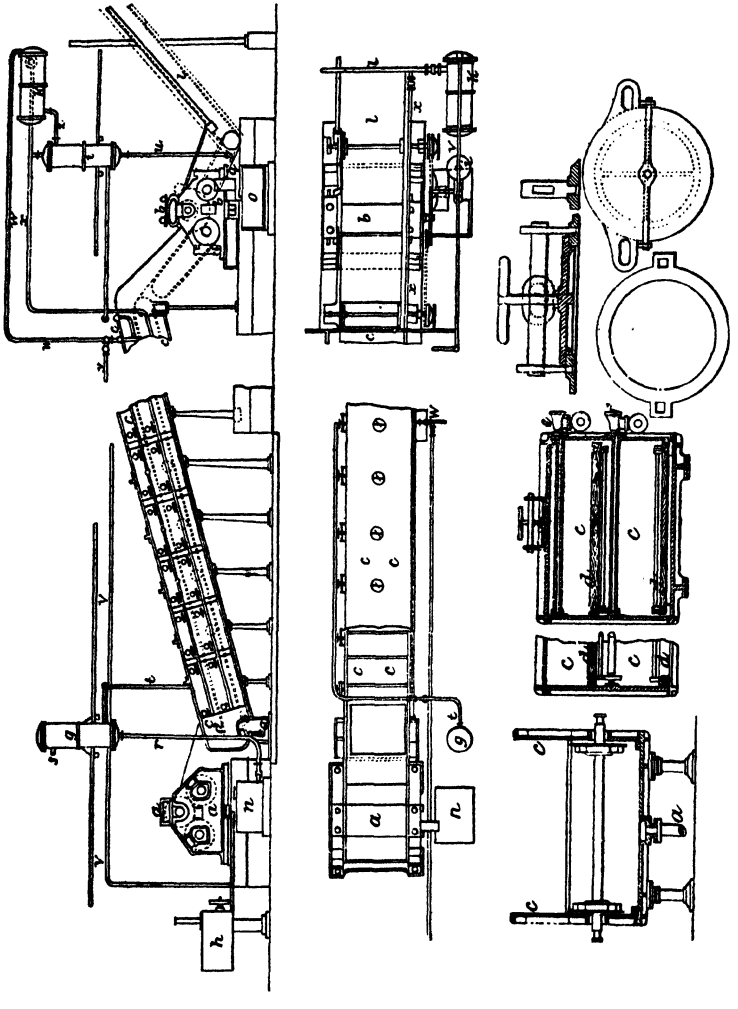

44.

from centre to centre ; *c* is the chamber connecting the mills, and provided with man-holes ; *d* is an endless band to carry the canes from the first to the second mill ; *e* is the first sys-

tem of perforated piping by which water or cane-juice may be thrown upon the canes; *f* is the second series of perforated pipes placed under the endless band *d*; *g* is the first cane-juice heater; *h*, sulphur box; *i*, first heater for second juice from the mill *b*; *k*, second heater for second juice; *l*, elevator for finished begass; *m*, gutter from first mill to sulphur box; *n*, first juice liquor pump; *o*, second juice liquor pump; *p*, first pump valve box; *q*, second pump valve box; *r*, pipe carrying first juice to heater *g*; *s*, pipe leading to clarifier; *t*, supply pipe for hot water to upper saturator supply pipes; *u*, pipe carrying second juice to heater *h*; *v*, connecting pipe between heaters *h i*; *v'*, pipe for delivering second juice into gutter of sulphur box; *w*, pipe, with cock attached, to deliver second juice into the upper range of saturator supply pipes; *x*, pipe for supplying the lower range of saturator supply pipes with steam or water; *y*, pipe conveying condensed steam and water to heater *h*; *z*, exhaust steam pipe from engine; *a'*, pipe for carrying away the water or water and juice that may collect in the chamber *c* during the saturation of the begass; cocks regulate the distribution of water or steam from the pipes *e f*; the endless band *d* consists of chains, lateral bars, and wire meshwork.

The method of operation is as follows: The partially exhausted canes, upon being delivered from the first mill *a*, are carried by the endless band *d* for further treatment by the second mill *b*. During their passage through the chamber *c*, they are subjected to a spray of hot water from the pipes *e* (cane-juice may be used), and to a jet of steam or water from the pipes *f*. The juice obtained by the treatment in the first mill *a* passes through the sulphur-box *h*, and is afterwards forced through the juice-heater *g*, and then to the clarifier. The condensed water from the heater *g* passes through the pipes *t e*, and is used for saturating the canes in their passage through the chamber *c*, the canes being further treated by jets of steam or water from the pipes *f*. The saturation dis-

solves the crystalline matter resident in the cells of the canes. The canes then pass through the second mill *b*, which expresses the juice caused by the saturation. This second juice falls into the second liquor pump *o*, and is forced through the heaters *i k*. The second juice thus obtained may be passed through the pipe *v'* to join the first juice, and thence to the clarifiers, or it may pass through the pipe *w* into the upper pipes *e* to saturate the canes; or it might be sent direct to a second set of clarifiers from the heater *k*.

An account of the working of this process will now be given, premising that the figures must be taken for what they are worth, as no means exist for checking them.

The machinery described was worked for 32 days; the output in that time was 400 hhd. of sugar and 200 puncheons of rum, the quantity of mixed juices dealt with having been 859,600 gallons. The first juice polarised from 88° to 96°; the average of the mixed juices was 80°. On this basis, the yield of sugar should have been 1,124,356 lb. The actual yield was—

400 hhds. sugar × 1860 lb. each	=	744,000 lb.
200 puns. rum × 17 lb. a gallon	=	340,000 ,,
		1,084,000

The loss therefore amounted to 3·59 per cent.

A trial made on another estate gave the following result:—

Canes carefully weighed	8104 lb.
Begass	2475 ,,
Yield of juice	5629 ,,

or 69·45 per cent. of the canes operated upon; the juice polarised 98°, which gives a corresponding specific gravity of .. .. 10·6023

Add albumen and other extracts	0·1600
Weight per gallon	10·7623

$$\frac{5629}{10 \cdot 76} = 523 \text{ gallons} \times 98^\circ \times 0 \cdot 01635 = 838 \text{ lb. sugar,}$$

or 10·34 per cent. extracted of polarisable sugar.

The above canes weighed	8104 lb.
Deduct ligneous matter	810 ,,
Juice	7294 ,,

100 c.c. weighed 106 grammes by polariscopic indication,
add 1·6 albumen, etc.

107·6 total weight.

7294 ÷ 10·76 = 677 gallons × 98° × 0·01635 = 1084·75 lb. of sugar in above canes, or .. .. 13·38 per cent.
Extracted as above .. .. 10·34 ,,

Left in begass .. .. 3·04 ,,
Taking juice in cane .. .. 7294 lb.
Do. extracted .. .. 5629 ,,

Left in begass .. .. 1665 ,,
1665 ÷ 10·76 = 154·7 gallons;
154·7 ÷ 24·75 lb. begass = 6·2 gallons of juice left in every 100 lb. begass.

To trace this loss, to 100 lb. of begass 100 gallons of water were added, and the begass thus saturated was thoroughly infused in a close vessel; when the liquor of saturation was tested by polariscope, it gave a reading of 6°, therefore 106·2 × 6° × 0·01635 = 10·42 lb. of sugar left in 100 lb. begass, as against 6·2 gallons × 98° × 0·01635 = 9·93, showing that the juice left in the begass was quite as rich as the original cane-juice.

10·42 × 24·75 cwt. begass = 257·8 lb. sugar remaining unextracted out of 8104 lb. canes, or $\frac{257 \cdot 8}{8104} = 3 \cdot 18$ per cent., as against 3·04.

Some further trials may be summarised as follows:—

FIRST TRIAL.

12208 lb. canes
60 per cent. 1st crushing

7324·80 lb. cane juice
1208 lb. canes

4883 ,, begass and cane-juice
3662 ,, water added to equal juice left in begass

8545 ,, material going to 2nd mill
3270 ,, begass and 2nd juice sent to logie

2)5275 ,, water and juice obtained by 2nd grinding

2637 ,, juice equal to first
7324 ,, juice extracted by 1st mill

9961 ,, juice totally extracted
9961 ,, from 12,208 lb. gives
81·59 per cent.

100 lb. canes
10 ,, fibre

90 ,, juice
60 per cent. 1st crushing

30 lb. left in every 100 lb. canes
12,208 lb. × 30% = 3662 lb. left in begass; and as every 100 lb. of canes operated on sent to the begass logie 26·79 per cent. (the difference between 100 and 73·21), we have sent to the begass logie 12,208 lb. × 26·79 = 3270 lb. of begass and 2nd juice.

The polarisation of original juice in this trial was 94·6°, and the corresponding specific gravity therefore.. .. .. .. 10·546
Add albumen and other extracts .. .. .. 0·160

Weight per gallon .. .. 10·706

9961 ÷ 10·70 = 931 gallons × 94·6° × 0·01635 = 1439 lb. sugar, or 11·79 per cent.

Canes as above .. .. 12208 lb.
Deduct ligneous matter .. .. 1220 ,,

Juice .. .. 10988 ,,

10988 ÷ 10·70 = 1027 gallons × 94·6° × 0·01635 = 1588 lb. sugar in 12208 lb. cane, or 13·01 per cent.

Extracted as above 11·79 ,,

Left in begass .. 1·22

Taking juice in cane .. .. 10988 lb.
Extracted .. .. 9961 ,,

Left in begass .. .. 1027 ,,

1027 ÷ 16·70 = 96 gallons ÷ 3270 lb. begass = 3 gallons of original juice left in every 100 lb. begass, together with 3 gallons of water, the proportion added in its reduction to second juice.

To trace again the sugar unextracted, 100 lb. of the begass were taken as before, and infused with 100 gallons of water, the liquor of saturation when tested polarising 2·2°.

6 gallons solution in 100 lb. begass
100 ,, water

106 × 2·2° × 0·01635 = 3·81 lb. sugar left in 100 lb. begass, as against 3 × 94·6° × 0·01635 = 4·64.

3·81 × 32·70 cwt. begass = 124·58 lb. sugar remaining unextracted out of 12,208 lb. canes, or $\frac{124 \cdot 58}{12,208}$ = 1·02 per cent., as against 1·22.

SECOND TRIAL.

8943 lb. canes
60 per cent. 1st crushing

5365·80 lb. cane-juice
8943 lb. canes

3578 ,, begass and cane-juice
2682 ,, water added to equal juice

6260 ,, went to 2nd mill
2354 ,, begass and second juice sent to logie

2)3906 ,, water and juice obtained by 2nd crushing

1953 ,, juice equal to first
5365 ,, extracted by first mill

7318 ,, juice totally extracted
8943 : 100 : : 7318 = 81·82 per cent.

100 lb. canes
10 ,, fibre

90 ,, juice
60 per cent. 1st crushing

30 lb. juice left in every 100 lb. canes

8943 lb. × 30 % = 2682·9 lb. juice left in begass; and as every 100 lb. of canes operated on sent to the begass logie 26·33 per cent. (the difference between 100 and 73·67), there were sent to the begass logie 8943 lb. × 26·33 = 2354 lb. of begass and second juice.

The polarisation of original juice in this instance was 94°, and a consequent density of .. .. 10·5369
Add albumen and other extracts .. .. .. 0·1600

Weight per gallon .. .. 10·6969

7318 × 10·69 = 684 gallons × 94° × 0·01635 = 1051 lb. sugar, or 11·75 per cent.

Canes as above	8943 lb.
Deduct ligneous matter	894 ,,
Juice	8049 ,,

8049 ÷ 10·69 = 752·85 gallons × 94° × 0·01635 = 1157 lb. sugar in 8943 lb. cane, or .. .. 12·93 per cent.

Extracted as above	11·75 ,,
Left in begass	1·18 ,,
Taking juice in cane	8049 lb.
Extracted	7318 ,,
Left in begass	731 ,,

731 ÷ 10·69 = 68 gallons ÷ 2354 lb. begass = 2·90 gallons of original juice left in every 100 lb. begass, together with 2·90 gallons of water, the proportion added in its reduction to second juice.

To trace as before the sugar unextracted, 100 lb. of the begass was infused with 100 gallons of water, the liquor of saturation when tested polarising 1·6°.

5·80 gallons solution in 100 lb. begass
100·00 ,, water

105·80 × 1·6° × 0·01635 = 2·76 lb. sugar left in 100 lb. begass, as against 2·90 × 94° × 0·01635 = 4·45.

2·76 × 2354 cwt. of begass = 64·97 lb. sugar remaining unextracted out of 8943 lb. of canes, or $\frac{64·97}{8943}$ = 0·72 per cent., as against 1·18.

So much for the decreased loss of sugar in the begass. There remain for consideration the questions of fuel and increased labour. With regard to the fuel, it must be remembered that in addition to the extra yield of juice from the cane, there is about 480 gallons of water for every hhd. of sugar. This will represent a total of 7000 lb. of water to evaporate, requiring about 11 cwt. of coals. At the same time, the heating power of the begass has been reduced. The

additional manual labour is said to be covered by 32 cents (1*s.* 4*d.*) per hhd.

The relative cost of coal and value of sugar in imperfectly exhausted begass may be approximately stated as follows :—

1. The contents of 100 lb. of canes are:

10 lb.	begass
2 ,,	refuse
15 ,,	sugar
73 ,,	water

Therefore, if all the juice of the cane were extracted, about 5 lb. of water would have to be evaporated for each 1 lb. of sugar contained in the cane; and there are 10 lb. of begass for the evaporation of 73 lb. of water.

2. The usual 60-per-cent. crushing of 100 lb. of canes gives :—

10 lb.	begass	combined
30 ,,	juice	combined
2 ,,	refuse	
10 ,,	sugar (assumed)	
48 ,,	water	

In this case, 4·8 lb. of water have to be evaporated for each 1 lb. of sugar extracted; but as the 10 lb. of begass have 5 lb. of sugar left, and the quantity to be evaporated is reduced to 48 lb., the duty of evaporation is reduced from 73 to 48—at the cost of 5 lb. of sugar.

3. By the maceration process, 100 lb. of canes plus 16 lb. of water give :—

10·0 lb.	begass	combined
8·0 ,,	water	combined
13·5 ,,	sugar (assumed)	
2·0 ,,	refuse	
82·5 ,,	water	

Here, 6 lb. of water (the theoretical duty of 1 lb. of coal) have to be evaporated for each 1 lb. of sugar; the 10 lb. of begass have still 1·5 lb. of sugar, and the water to be evaporated is increased to 82·5 lb. The additional water to be

evaporated is then 34·5 lb. in excess of No. 2, as against a gain (assumed) of 3·5 lb. of sugar. Taking the water at 36 lb. in round numbers, this being the evaporative duty of 6 lb. of coal, the comparison is reduced to 6 lb. of coal *versus* 3·5 lb. of sugar. For comparison, the relative values may be assumed thus :—

3½ lb. of sugar at 5 cents (2½*d.*)	= 17·5	cents
6 „ coal at 6½ dollars (27*s.*) per ton	1·8	„
Difference in favour of coal	15·7	„

This is the saving on each 100 lb. of canes by using the maceration process. Taking 10 tons of canes as the quantity required to make a hhd. of sugar, the saving per hhd. amounts to 35 dollars 16 cents (or 7*l.* 6*s.* 6*d.*). From this, must be deducted the interest on extra plant, wear and tear, and increased labour. It would appear from numerous statements that the total extra cost of procuring the extra yield of sugar is about 50 per cent. of the value of the extra sugar.

Some experiments on the comparative merits of maceration and ordinary processes were conducted by Fahlberg with a threefold object, and his statements reveal: (1) The additional yield of juice, (2) the additional expenses per hhd. (of 1800 lb. nett) of begass sugar (i.e. 2nd extraction), and (3) the relative profit afforded by a hhd. of begass sugar and one of ordinary 1st extraction sugar.

The additional yield of diluted juice from the second mill was 10 per cent., which, added to 60 per cent. from the first mill, gives 70 per cent. as the collective return from 100 lb. of canes, the second mill thus giving an increase on the return of juice of 16·66 per cent. In 100 gallons of maceration juice, density 1·035, were 50 gallons of added water, which, deducted, left 50 gallons of original juice, density 1·07.

To arrive at the additional expenses for making 1 hhd. (of 1800 lb.) of begass sugar, it was necessary to conduct a double experiment—to watch the making of the single crushing

sugar in one building, and the maceration juice in another, keeping a separate account of each (called respectively *a* and *b*), *a* juice density being 1·07 and *b* 1·035.

The net result, taking into account cost of fuel, labour, and interest on capital, was in favour of maceration to the extent of 4·6 per cent. on the value of the sugar and rum produced.

The following account of the cost of working a cane sugar factory is taken from the first annual report of the directors of the Antigua Central Sugar Factory, as given in the *Agricultural News* of February 17, 1906. The factory buildings, plant, machinery, etc., were supplied and erected under contract with the Mirrlees Watson Company, Limited, of Glasgow, and the factory is capable of dealing with 3000 to 4000 tons of sugar in three to four months, but owing to the severe drought, which seriously affected the amount of canes supplied, only about half this quantity was produced.

THE ANTIGUA SUGAR FACTORY, LIMITED.

Balance Sheet, September 30, 1905.

LIABILITIES.

	£	s.	d.	£	s.	d.
To Creditors				564	11	8
„ Share Capital :—						
12,500 'A' shares, 1*s.* each fully paid	625	0	0			
12,500 'B' „ 1*s.* „ „	625	0	0			
				1,250	0	0
„ Debentures :—						
250 'A' debentures, £100 each ..	25,000	0	0			
15 'B' „ £1000 „ ..	15,000	0	0			
				40,000	0	0
„ Reserve Fund				1,000	0	0
„ Profit and Loss :—						
Balance at credit of profit and loss account				3,928	1	8
				£46,742	1	8

ASSETS.

	£	s.	d.	£	s	d.
By Cash in hands of agents	994	1	2			
,, Debtors	588	17	7			
,, Stocks and stores in Antigua..	1,010	19	10			
,, Stocks of materials and spare parts ..	790	0	0			
				3,383	18	7
,, Capital Expenditure :—						
Land, buildings, plant, and machinery	33,815	12	1			
Dwelling-houses and other buildings	1,279	9	7			
Railway construction	5,518	13	11			
Railway rolling stock	2,548	9	7			
Preliminary expenses	946	9	7			
Discount on debentures	1,250	0	0			
Deduct—	£45,358	14	9			
Written off by way of sinking fund	2,000	0	0			
				43,358	14	9
				£46,742	13	4

Profit and Loss Account for the year ended September 30, 1905.

	Tons	Cwt.	Qr.	Per Ton s.	d.	£	s.	d.
To Canes purchased :—								
Contracting planters	15,333	17	1	11	7	8,885	5	5
Outside estates	344	0	0	12	9	219	7	7
Peasant growers	182	5	3	11	4	103	15	2
	15,860	3	0	11	7	9,208	8	2

	£	s.	d.	£	s.	d.
To Factory charges :—						
Salaries	1,080	18	1			
Wages	828	10	7			
Fuel	337	8	7			
Stores, including bags	603	2	6			
Repairs and maintenance	710	0	9			
Fire and storm insurance	138	5	9			
Cartage and lighterage of sugar	387	4	11			
				4,085	11	2
(Per ton of sugar, £2 10*s*.)						
To Railway transport expenses :—						
Wages	91	11	5			
Fuel	57	16	0			
Stores	35	0	0			
Repairs and maintenance	183	1	10			
				367	9	3
(Per ton of sugar, 4*s*. 6*d*.)						
Carried forward				£13,661	8	7

				£	s.	d.
Brought forward				13,661	8	7
To Administration charges :—						
Directors	250	0	0			
Travelling	140	9	3			
Legal and professional	50	0	0			
Stationery, books, and petties	55	14	1			
Telegrams and postage	168	0	5			
				664	3	9
(Per ton of sugar, 8*s.*)						
To Interest :—						
Debenture interest	1,434	14	6			
Less credits	99	14	3			
				1,335	0	3
To Sinking Fund	2,000	0	0			
,, Reserve ,, ...	1,000	0	0			
,, Balance :—						
Payable to outside estates (say 2*s.* 6*d.* per ton of canes)	43	0	0			
Payable to contracting planters (say 2*s.* 6½*d.* per ton of canes)	1,942	10	10			
Shareholders' proportion	1,942	10	10			
				6,928	1	8
				£22,588	14	3
By net proceeds of sugar, etc., produced :—						
Sugar, 1,634½ tons (£12 15*s.* 5*d.* per ton)	20,873	9	11			
Molasses, 77,000 gallons (5¼*d.* per gallon)	1,685	4	4			
				22,558	14	3
,, Sundries				30	0	0
				£22,588	14	3

Abstract of working of the Factory during 1905.

Tons of cane	15,860·6
Gallons of diluted juice *	2,437,500
Cane sugar in juice, lb.	4,427,472

* Average composition of diluted juice :—

Cane sugar	16·89	per cent., 1·835 lb. per gallon.
Glucose and non-sugar	2·04	,,
Total solids	18·93	,,
Purity	89·23	,,
Average sucrose in begass ..	7·6	,,
,, water ,, ..	49·5	,,

Sugar made, 1st, 1,600 tons }	
„ „ 2nd, 35½ tons = „ 30 „ }	
„ „ as first sugar, tons	1,630
„ „ „ „ lb.	3,651,200
Commercial sugar per 100 of cane sugar in juice, i.e. "extraction"	82·46
Gallons of molasses	77,000
Molasses per ton of sugar	47·24
Tons of cane per ton of sugar	9·73
Cords of wood used	371
Tons of coal (chiefly locomotives)	57
Days working	86
Hours grinding	1,063

NOTE.—The canes have yielded 10·31 per cent. of sugar, or 9·70 tons of cane to one ton of sugar.

An instructive manner of viewing the effect of added water for maceration or diffusion was given by Paton. Taking the *masse-cuite* as equal to 20 per cent. on the juice, we find that not only does the percentage of water to be evaporated, up to that stage, increase with the amount of juice extracted, but that, instead of the water to be evaporated increasing by the percentage of dilution, it is several times as much, as will be seen from the following table :—

Cane	Extraction	Dilution	*Masse-cuite* per 100 canes	Water to be evaporated up to *masse-cuite* of 20 per cent.	Percentage of Water evaporated
		%			
Single crushing	74	nil	14·8	59·2	100
Double crushing	83	nil	16·6	66·4	112·2
„ „ and maceration	88	12	17·6	94·4	159·4
Triple crushing and maceration	92	10	18·4	91·6	154·7
Diffusion, older process ..	94	25	18·8	106·2	179·4
„ new process	95	15	19·0	96·0	162·2

Double crushing and maceration with 12 per cent. dilution increases the water to be evaporated, not by 12 per cent. but by 59·4 per cent., or nearly five times as much.

In diffusion with the addition of 15 per cent. of water, the extra amount to be evaporated to obtain a *masse-cuite* of 20 per cent., is 62·2 per cent. Of course, this is on the

assumption that the dilute juice is added to the original juice, and not utilised for diluting first molasses.

Diffusion.—All the processes described in the foregoing pages for extracting the juice from the cane have depended for success upon the more or less complete *rupture* of the cells containing the juice. The process now to be considered, and which is known as "diffusion," differs from them essentially, in dispensing with the breaking up of the cells.

At the present time the process, as far as the manufacture of cane sugar is concerned, has been almost entirely abandoned, but considering the attention given to it for many years, and the hopes that it inspired of improving the planter's position by an increased and improved sugar yield, and the immense sums expended in plant required for working it, some account of it will still be of interest, full particulars of the process as employed in the manufacture of beet-root sugar, being given in their proper place.

To explain this system, it is necessary to review the characters and properties of the several bodies composing cane-juice. The constituents and their relative proportions have already been given (see p. 101). They may be classed under two distinct groups: (*a*) "Crystalloid," including the sugar itself and the "salts" which are capable of assuming a crystalline form; (*b*) "Colloid" (glue-like), embracing the gummy or mucilaginous matters which are not capable of crystallisation. In cane-juice, these two classes of bodies exist in most intimate association in the cells of the plant. Now these two classes are distinguished from each other by a remarkable physical fact, which forms the basis of all modifications of the diffusion system. This fact is the difference which they manifest with regard to the power of passing through moist water-tight membranes. The bodies belonging to the series (*a*), when dissolved in water, will pass through most animal and vegetable membranes (gut, parchment, plant-cells, parchment-paper, etc.), when there is water on the other

side; those belonging to the series (*b*) are not possessed of that property. This method of separating bodies is termed "dialysis," "osmosis," or "diffusion," and the membrane which effects the separation is called a "septum" or "dialyser." The dead cell-walls of the sugar-cane itself form an excellent dialyser; therefore, by cutting the cane into convenient slices, and soaking these in water, the crystalloid constituents of the juice (including the sugar) will pass through the cell-walls and into the surrounding water, while the colloid (gummy and albuminous bodies) will mostly remain within the cells. Thus the juice is at once more or less completely purified of these gummy and albuminous matters which, as already described on pp. 110–11, are the principal sources of trouble and loss in sugar-making, and is at the same time far less contaminated with the vegetable débris resulting from the mechanical breaking-up of the cane.

For experiment, a quantity of cane slices $\frac{1}{16}$ inch thick and 3 to 4 inches long may be placed in a vessel with about the same quantity of water, when the following changes will take place. The water will force its way through the cellular membranes into the sugar cells, displacing a portion of the saccharine solution, which will pass out of the cells, thereby diminishing the specific gravity of the juice left in the cells, and increasing that of the water outside; and this interchange will continue until the water in the vessel has attained the same specific gravity as the liquid in the sugar cells: the diffusion is then complete.

Let it be supposed, for instance, that the juice in the cells has a specific gravity of 1·043 (equal to 12 per cent. by saccharometer), and the surrounding water a specific gravity of 1·000. When the diffusion is complete, the water will be found to possess a specific gravity of 1·023 (equal to 6 per cent. by saccharometer), and the now diluted juice in the cells the same. Consequently the complete exhaustion of the sugar from the cells can only be accompanied by frac-

tional diffusion, that is, by substitution for the liquid obtained another of less specific gravity (or water itself); and this replacing of the more saturated liquid by a less saturated one must be continued until the desired degree of exhaustion is reached.

What is true of cane-juice, is also true of beetroot-juice, and in fact the chief application of the diffusion process has been in the beet-sugar industry, and in that section it will receive extended notice. Nevertheless, several methods of applying the system to cane sugar have been introduced, and these will now be described.

The subject may be introduced by a brief historical sketch of the development of the process.

Although borrowed from the earliest stage of the beetroot industry, it was not till 1843 that the operation of slicing was applied to the sugar-cane. It was hoped that the cane, after having been sliced, dried, and ground to powder, might be preserved long enough unchanged in this condition to allow of its being transported to Europe, where not merely the whole sugar might be extracted at once in its purest form, but the ligneous portion would furnish an inexhaustible supply of fibre for the paper market. The dried cane powder, however, became altered on the voyage, and not only did great part of the sugar disappear, but the changes consequent on its decomposition discoloured the residuary fibre. But there was one result from this trial sufficiently noteworthy. It was clear that the cane could be sliced and dried in commercial quantities, and several of those concerned in the matter determined to extract the sugar on the spot; accordingly, more than one attempt was made to carry out the slicing, and apparently every obstacle was overcome, when the building erected for the plant was, unfortunately, burned.

One of the principal difficulties hitherto had been that of drying the sliced cane; to avoid this, in 1845, Constable and Michel introduced their method on the estate of Ste.

Marie, the property of Major Bouscaren, in Guadeloupe. It was as follows: The canes, which were sliced at the rate of 1 ton in twenty minutes, fell into metallic baskets, each capable of holding that amount. The baskets were moved by a central crane, and around the crane, at equal distances, were placed 6 copper vessels, adjusted to receive the baskets when filled. These copper vessels were filled to such an extent with water, that when the basket, full of sliced canes, was lowered into any one, the liquid rose to the surface. The basket No. 1, with its contents, having been thus dipped into vessel No. 1, was allowed to remain immersed till such time as the sliced canes had parted (by displacement) with a due proportion of their sugar to the water in vessel No. 1; basket No. 1 was then hoisted out by the crane, and consigned to vessel No. 2, where a second proportion of sugar was displaced; and so on throughout the series. In the meantime, a fresh basket full of sliced cane, was consigned to No. 1 vessel, the liquid in which abstracted a further proportion of sugar, and so on, till the contents of the first vessel were as fully saturated with sugar as the law of displacement allowed, and the slices of cane in the first basket were proportionately exhausted.

This was virtually the old system of Dubrunfaut with its defects, viz. that the water was not easily kept at a suitable temperature; that the whole sugar was not extracted; and that, from the time which elapsed between slicing and exhaustion, considerable changes occurred in the saccharine fluid, which affected the quantity and quality of the result. These defects in principle did not, however, of themselves contribute much to the failure of the plan; the system broke down in the subsequent evaporation, in which the heat employed was generated entirely from gas manufactured on the spot—an operation attended with such difficulties that the trials were given up after heavy outlay. This was much to be regretted, as the slicing process had shown that a much larger proportion of the sugar could be extracted

from the cane than had been hitherto done in any other mode.

A system so simple and yet promising such complete results was not destined to disappear without leaving traces. In September 1847, Davier, apothecary in chief to the French service at Basseterre, resumed the experiments of slicing and drying the canes, at the point where they had been left off in 1845. He found that by driving off about 33 per cent. of moisture from sliced canes, they became so friable as to be reduced, without difficulty, to a coarse powder, in which the colouring matter and albumenoid principles of the cane had become insoluble in water, while the saccharine elements were crystallised unchanged, and ready for immediate solution and extraction by water, either hot or cold. The former would have been the more rapid, but he met with an objection to its use, which, if not scientific, was at least practical. The vessels he employed were of copper, and transmitted the heat so rapidly, that the attendants were constantly burning their fingers; he did not consider it worth while to take any precautions to avoid this evil, as he found cold water sufficient for the purpose, and more economical. The process he adopted was the following: Six upright cylinders of copper, about 4 feet high and 9 inches in diameter, were so arranged as to communicate with each other, and with a reservoir of water on a higher level; they were each furnished with gauges and stopcocks; 5 of these were filled with cane powder, and the last with animal charcoal—this was merely precautionary, but not essential to the work. Water was admitted into No. 1, and retained there for 20 minutes after the gauge showed that the vessel was full; it was then passed into No. 2, and so on. In practice, it was found that, on escaping from No. 4, the water had absorbed so much sugar as to mark 22·5° B., or about the density when syrup is usually consigned to the vacuum-pan; and that the cane powder first in contact with the water, viz. that in No. 1, was completely exhausted, even to the taste,

that most convenient and reliable saccharometer, and represented what it was reduced to in reality — a mass of wet sawdust. At this stage of the process, it was removed from No. 1 and replaced by a fresh portion of cane powder. As this part of the operation was performed without interrupting the duties of the other cylinders, it is clear that two of the greatest desiderata had been attained, namely, the complete extraction of the sugar in a state of purity, and that by a continuous operation.

The mechanism thus employed by Davier in September 1847 appeared to leave little room for improvement. It was submitted to and approved by the French Government, who commissioned the inventor to repair to Paris in the ensuing month of March to take the necessary steps for erecting a set of machinery on a larger scale on the French King's estate of Tremouillant, in Martinique. Fortune seemed thus about to crown Davier's laborious and successful trials; but, before his appointed hour of embarkation arrived, cries of "*Vive la République*" were ringing throughout the French islands, and the new process was shelved.

Since that date, the Hon. H. S. Mitchell has several times, in conjunction with H. Warner, repeated the process of slicing and drying the sugar-cane, with exactly similar results, namely, the extraction of all the contained sugar by displacement with cold water, in about 1 hour and 20 minutes, in the form of a pure syrup, marking between 22° and 23° B.

Warner next directed his attention to the slicing of the cane, to ascertain how far he could succeed in extracting the sugar without recourse to drying the slices. After repeated trials, conducted with every precaution, he succeeded in obtaining, by displacement, a liquor marking 9° B. where the original juice of the cane marked 10° B.; this was a great success, but not equal in results to the mode where the slices were dried, because there was not only an original loss in not obtaining the whole sugar, but the juice had an opportunity of

becoming changed to an extent that greatly increased the quantity of uncrystallisable sugar. This latter evil was mitigated by the use of small doses of antiseptics in the dis-

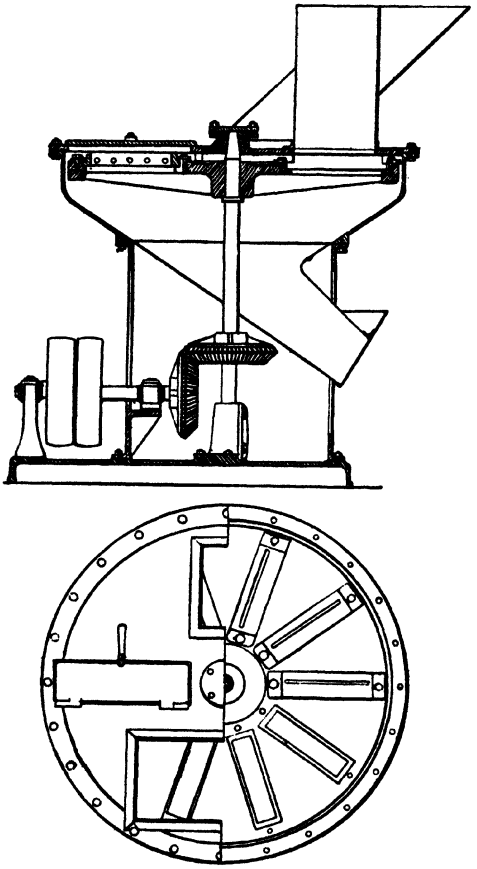

FIG. 46.—MANLOVE, ALLIOTT AND CO.'S CANE-SLICING MACHINE.

placing water, so as to preserve the juice unchanged throughout the process of manufacture.

Slicing Machines.—The first step in the diffusion process was to reduce the canes to thin slices. A machine for this

purpose was introduced in 1879 by A. X. H. Jouin, of Paris, and U. J. Peay, of Havre, and extensively adopted in the French colony of Guadeloupe, with satisfactory results.

Manlove, Alliott and Co.'s cane-cutting machine, Fig. 46, consisted of a horizontal disc, carried on a vertical spindle driven by a belt and bevel gear, and revolving in an upright circular casing, in the top or cover of which were two or more angled shoots. Through these shoots the canes were fed down on the surface of the revolving disc, which carried ten or twelve diagonal steel cutters, fixed in cutter boxes readily removable through doors in the casing cover, for the purpose of sharpening the knives. These knives revolved at a high speed, and rapidly reduced the canes into long oval slices, about $\frac{1}{20}$ inch thick, and delivered them into a conical hopper arranged underneath the disc casing.

Bouscaren's System.—In 1876, Louis Frederic Gustave Bouscaren, son of the Major Bouscaren whose name was so early associated with this subject, introduced a system of applying the diffusion process to the sugar-cane, which was intended to overcome the difficulties hitherto experienced.

Robert's System.—The name of Julius Robert is sufficiently familiar to those engaged in the beet-sugar industry, and his diffusion process was tried by cane planters in several parts of the world. His system will be described at some length in the section on beet sugar. For its application to cane, the machinery required comprised a 45-H.P. steam engine, cane-cutters, diffusion vessels, and a heater.

Prolonged trial was made of this process in Louisiana, but without success, for the apparatus has lately been broken up and sold.

Fig. 47 shows the general arrangement of diffusion plant, made by Manlove, Alliott and Co., Nottingham. The canes were delivered on the cutting platform, in the floor of which four shoots were arranged. Through these shoots the canes were fed downwards to the cutting machines, shown in detail

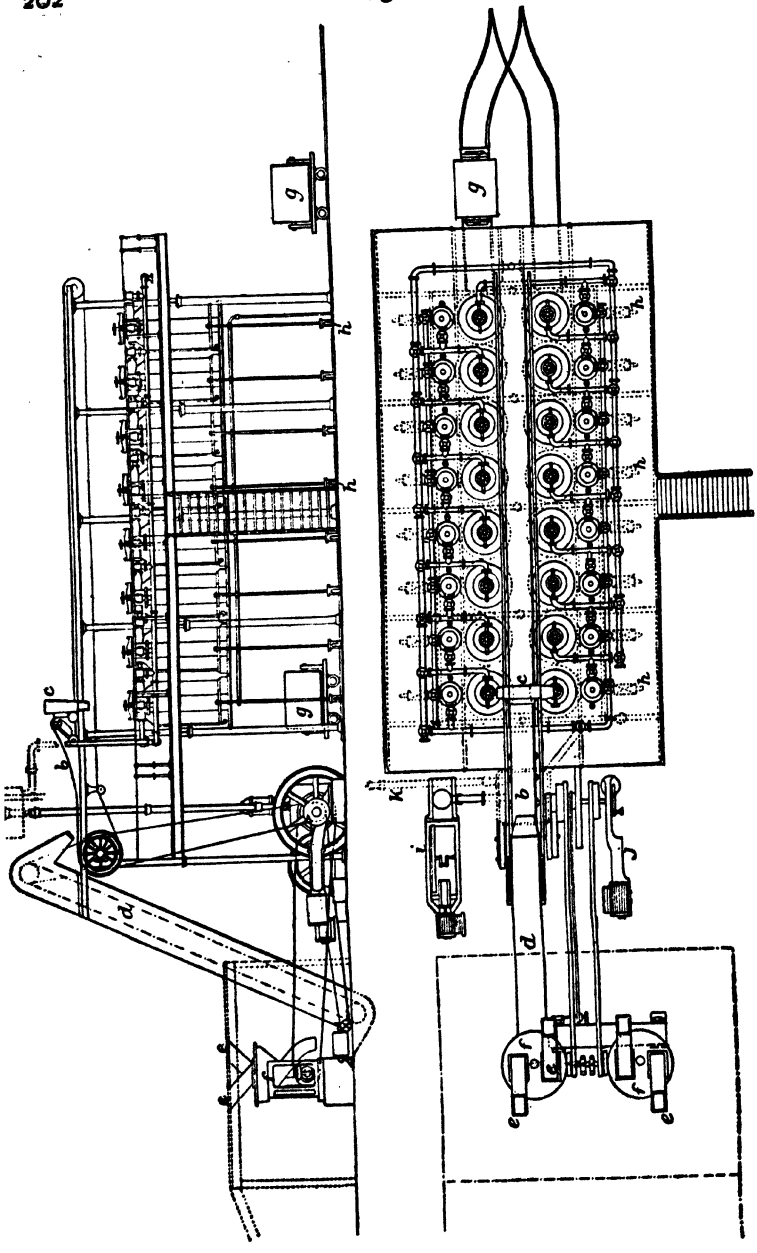

FIG. 47.—GENERAL ARRANGEMENT OF DIFFUSION PLANT.

on Fig. 46. The cane slices, about $\frac{1}{20}$ inch thick, were delivered in a continuous stream on a carrying band, by which they were conveyed to an elevator and raised to the top of the diffusion house, where they were delivered on another carrying band with a special discharging arrangement, consisting of a truck with two side shoots and two rollers, over which the band was made to pass in such a way as to cause the slices thereon to be thrown forward clear of the band into one of the side shoots, which delivered them into one of the sixteen diffusion vessels. These, with their accompanying juice heaters, are fully described hereafter. The cutting machines, elevators and carrying bands were driven by a horizontal steam engine. The water tank at the top of the building was supplied by a specially designed water pump, and from this tank the water was led to any one of the vessels which might happen to be freshly charged, or for washing purposes.

The process of working was as follows :—

Any one vessel of the series having been filled with fresh cane slices through the top door, the cover was screwed down, and the proper quantity of water admitted from the overhead tank through the tubular heater. The succeeding vessel was then filled with fresh slices, the cover replaced and a valve opened to allow the diluted juice from the previous vessel to be forced into the same through a second heater by means of a further supply of water admitted into the previous vessel from the overhead tank. A third vessel was then filled with slices and the liquid contents of the second vessel were forced into it by means of a further supply of water admitted into the first vessel, the thin juice from which replaced the liquid in the second vessel. This process was repeated as often as desired, say from 12 to 16 times, so that when the last vessel of the series had been filled with fresh slices and the diluted juice from the previous vessel had been admitted into it, the cane slices in the first vessel were almost completely ex-

hausted, and the necessary water for forcing the liquid was admitted direct to the second vessel. The first vessel was thus thrown out of work, the liquid contents were run off, the bottom of the vessel was dropped, and the spent slices were allowed to fall into a wagon, to be removed to the drying ground. When it was desired to economise water, the final charge of very diluted juice in the first vessel of the series might be forced into the second by means of compressed air, instead of being run off to the drain, the empty vessel was refilled with fresh chips, and now became the last vessel of the series, the juice and liquor from the vessel filled immediately previous were admitted into it, and the compressed air or water supply was run into what was previously the second vessel of the series. In each case the liquid on its way from any one vessel to the next had to pass through a heater which raised it to the necessary temperature, thus dispensing with the use of direct steam in the vessels themselves.

The condensation water from the heaters was withdrawn by steam-traps. The hot concentrated liquor from the last vessel of any series was drawn off at a density of about 6° B. to the clarifiers, where it was treated in the usual manner.

The diffusion vessel (Fig. 47) consisted of a vertical cylindrical steel shell, with conical top or mouthpiece, closed by a door so arranged that by slacking the central screw it could be readily slung out of the way of the charging hopper. The bottom of the vessel was formed of a conical casting carrying a dished steel door, on which was fixed a perforated false bottom. This door was provided with a balance-weight, and was supported by a special design of cross-bar, on moving which a few inches the door would drop out of the way of the descending slices, thus admitting of a discharge opening equal in diameter to that of the whole vessel. A water-tight joint was made between the door and the bottom casting by means of a flexible hydraulic ring. Another arrangement consisted of a flexible pipe let into a recess in the bottom casting, and

by filling this pipe with water under pressure a satisfactory joint could be obtained. A vertical tubular juice-heater was attached to each vessel. This heater consisted of a shell of cast-iron or steel with top and bottom boxes and covers, the upper cover easily removable for the purpose of cleaning. The heating surface consisted of solid drawn brass tubes, fixed in brass tube-plates, with special means to counteract the effects of an unequal expansion. A thermometer was also fitted on the top cover to ascertain the temperature of the juice in the heater. The water or juice entered the heater by means of either of two stop valves shown at the top of the same; it then passed downwards through the tubes into the bottom of the vessel, where, by means of a perforated plate, it was distributed upwards through the contents, and escaped through the perforated plate at the top of the vessel, and by means of a branch on the top casting into the next vessel of the series, or to the clarifiers, as the case might be.

The heater was supplied with high-pressure steam through a valve at the top, a branch pipe and valve being also fitted to admit of steam being blown into the vessel when it had just been charged with fresh slices. A cock fixed at the lowest part of the heater admitted of the diffusion vessel and heater being completely emptied when desired. The condensation water from the heater was withdrawn by means of a steam-trap.

The Kessler diffusion process patented in France, England and the United States, claims to fulfil all the requirements of a rational juice extraction, and experiments have gone to show that the diffusion of the sugar cane gives excellent results, equal to those obtained with sugar beets. According to this method slices of canes or begass or crushed cane are subjected to a systematic diffusion beginning *in vacuo* in a continually and automatically operating device, a mechanical pressing device acting at the same time upon the compact mass which is in a uniform pile. The new process has, when applied to

sugar cane, the great advantage that the cane need only be crushed and broken up instead of being cut or sliced up. By crushing the cane about 40 per cent. of the juice is obtained, so that the amount of the cane mass to be treated is reduced. A further advantage consists in that the treated material after the diffusion or extraction is dried more perfectly, and forms a combustible fuel which is much better than the sliced cane refuse, from which the moisture cannot be sufficiently pressed out.

The slices or crushed cane are introduced into the apparatus at one end, and pressed forward by a strong conveyor or worm continuously into the diffusion receptacle, which is preferably a pipe, the length of which can be smaller than the sum of the heights of all the receptacles of a diffusion battery as at present employed. Moreover, the diffusion receptacle is slightly tapering, its diameter increasing from the inlet towards the exit. Here the compact mass is taken hold of by a convenient pressing device by which it is compressed and discharged. Water at the required temperature and pressure enters through an annular jacket round a perforated part of the casing in a continuous current, in order to cause the diffusion process to take place throughout the whole column of material in the receptacle. The heating of the liquor and the mashing of fresh cane material is effected by drawing off the juice continuously through a jacket arranged about a perforated part of the tube, say near the centre, passing it through a heater by a pump and returning it to the diffusion vessel.

Mr. Robert Harvey, in the "International Sugar Journal" for April 1904, gives a descriptive account of the Naudet diffusion process, which is intended to treat single-crushed begass by a systematic washing or maceration in battery of 8 or more cells, in combination with the forced filtration of the total output of juice. The exhausted begass is recrushed by a second mill for final use as fuel.

Each cell in turn is filled with fresh begass from the cane mill, the equivalent yield of mill juice being meanwhile limed and heated. The hot juice is then added to the cell, and the latter connected to the pump. Filtration is complete in from three to five minutes.

The saturated (sweet) begass, from which the filtered juice has been withdrawn, is successively treated with seven distinct liquids (i.e. mixtures of juice and water) of diminishing densities, and finally receives fresh water to remove the last trace of sugar. This final wash water is then displaced or driven forward by compressed air into the next cell, and the exhausted begass is discharged from the bottom of the cell, and delivered to the recrushing mill. The new process then dispenses with all existing methods of treating the juice between the mill and the evaporator. The entire output of juice is filtered, and begass macerated. Being a continuous process, day and night work is absolutely essential, existing mills relieved of all undue strain, as it is quite unnecessary to exceed 65 per cent. extraction by the mill. The loss is less than 1 per cent. sugar on the weight of the cane; the dilution about half that of the usual maceration process.

Looked at simply as a process for extracting a large percentage of sugar from the cane, diffusion is beyond question a great success, but most planters are more anxious to make money than to make sugar, and consequently the whole matter depends on the question—will it pay? This, in its turn, hinges almost entirely on the question of fuel.

Pumps and Substitutes.—As the apparatus by which the juice is extracted from the cane is generally situated on the ground floor of the building where the operations are conducted, it becomes necessary to consider what means shall be adopted for raising the juice into the other vessels where it is to undergo purification and concentration. Though the subject does not apply specially to sugar-making, yet it is one which demands great attention from the sugar-maker.

For many years, planters contented themselves with ordinary force-pumps, worked from the mill; but these possessed many disadvantages, among which might be included their limited capacity, the churning of the liquid and consequent admixture of air, and the contamination of the liquid with the grease used in their lubrication.

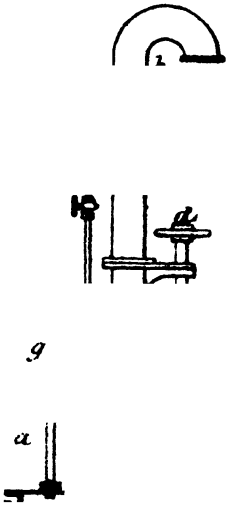

FIG. 48.—MONTE-JUS.

Gradually the *monte-jus* (or "juice-raiser") began to be copied from the French manufacturers. This useful apparatus is made in many forms, one of which is shown in Fig. 48. Its construction and mode of working are sufficiently simple. The body of it consists of two chambers *a b*, separated by a steam-tight diaphragm; the upper chamber *a* receives the juice to be elevated, while the charge in the lower chamber *b* is in course of elevation, and it is made of suitable capacity for that purpose. When the lower chamber *b* is empty, the valve *c* is raised by turning the handle *d*, while the tap of the air-pipe *e* is opened. The juice contained in the upper chamber *a* immediately descends through the valve *c*, any air that may have been imprisoned in the chamber *b* escaping through the air-pipe *e*. This air-pipe extends about 6 inches into the lower chamber *b*, for the purpose of ascertaining when the chamber is sufficiently full, the escape of air through the pipe *e* being, of course, stopped as soon as the juice reaches its lower end. The cessation of the whistling noise made

by the air rushing through the end of this pipe *e* constitutes the signal for screwing down the valve *c*, to prevent any further flow of juice into the lower chamber *b*. The air-tap is then closed, and the steam-tap *f* of the steam-pipe *g* communicating with the boilers, is opened, when the empty space between the surface of the juice and the top of the lower chamber *b* is immediately filled with steam, which at once commences to drive the juice out through the discharge-pipe *h*. As this pipe is carried down to within a short distance of the bottom of the *monte-jus*, nearly the whole of the contained liquor is forced out of the lower chamber *b*. As soon as any indications of steam appear at the mouth of the discharge-pipe, the steam-tap *f* is shut, and the valve *c* and air-tap *e* are opened to let in a fresh charge.

It will thus be seen that the action of the *monte-jus* is exceedingly simple, only one precaution being necessary, viz. to shut the valve *c*, through which the juice is running, in time. If the juice be allowed to reach the top plate of the chamber *b*, the steam, when let in through the pipe *g*, will mix with and boil the juice, but will not elevate it; considerable difficulty and delay sometimes arise from this circumstance. As a precaution against carelessness, an over-flow-tap *i* should be fitted to the shell of *b*, a few inches below the top, so that the superabundant juice might be drawn off. The cane juice, as it comes from the *monte-jus*, is said to be sufficiently warmed to retard fermentation on its way to the clarifiers.

While this instrument remains by far the most generally adopted means of raising cane-juice, its superiority has not been unchallenged. It has been objected that its interior is not readily accessible, and that it is therefore difficult to keep clean, whereby fermentation may be caused in the juice by the presence of accumulated dirt within the *monte-jus*. It is also urged that the liquor is diluted by the admixture of condensed steam.

Hence, in many cases, the *monte-jus* has been replaced by centrifugal pumps. In favour of these, it is advanced that there are no valves or other mechanism to become a refuge for dirt, no air or steam is forced into the liquor, and, with properly adjusted arms, the juice is raised in a solid column without churning. Many statements, however, point to the fact that the churning is often seriously worse than with ordinary pumps. In the best central factories, steam in the *monte-jus* is replaced by air under a pressure of 60 lb. per square inch, thus obviating most of the drawbacks that have been complained of.

Large numbers of pulsometers are now employed in sugar factories for raising juice, being well adapted to the work, owing to the absence of all moving parts except simple valves.

CHAPTER IV.

DEFECATION AND CLARIFICATION.

HAVING, by any of the methods just described, succeeded in extracting as much as possible of the juice from the cane, the next operation is to eliminate from that juice all the matters which are to be regarded as impurities from the sugar-maker's point of view, in other words, everything except the sugar and the water holding it in solution. What the impurities consist of has already been described (see p. 101). Their proportions will vary with circumstances, much depending upon the method of extraction employed.

Preliminary Straining.—First of all, unless the juice has been extracted by the diffusion process, it is necessary to remove the gross impurities derived from the breaking up of the canes, and known in Guiana as "cush-cush." This may be done by a series of strainers, arranged so as to be easily removed, cleaned and replaced.

One of the best contrivances for straining is a modification of the endless wire web strainer, not essentially different from the endless wire web on which the pulp of paper-works is received, and on which it is agitated and filtered from a great part of its water—only that at the paper-works the valuable part of the mixture remains on the web, while here the solid part is to be rejected, and the filtered part retained as valuable. The straining web is of fine wire-gauze, and revolves on three horizontal rollers, two of which are on the same level, as the upper angles of an inverted V, the third being at the lower angle, and immersed in a vessel of water. The greater part of the "cush-cush" is removed from the web by a scraper set

almost in contact with the web, just after it has turned over the roller in its descent. The web then descends into the water, and is washed, and finally any matter still adherent is removed by a brush so set as to be in contact with the web as it rises out of the water. A clean surface of wire-gauze is thus at all times present to receive the stream of juice; an effective straining is always obtained with much less wear and tear of gauze web than occurs from the frequent scrubbing required by the webs of ordinary straining-boxes, and the extremely careless way in which this scrubbing is generally performed. The wire-gauze in common use varies from 40 to 60 threads per inch, but it can be obtained of 80 threads, and if copper wire gauze, of 90: the finer the gauze the better, provided the rate at which the web travels is such as presents a clean surface as fast as is necessary, and the scraper, brush, and water in the trough, are all carefully looked to and kept in order.

The strained juice is received in a shallow tray placed immediately under the horizontal part of the straining web, and passes thence by a gutter to the clarifier.

The chief agencies hitherto introduced for effecting the cleansing of the juice are heat, chemical action and filtration. Their application will now be considered in succession.

Heat.—Heat alone exercises considerable beneficial effect in checking acidity, that is to say, scalding the juice prevents acetous fermentation setting in, probably by destroying the particular fungoid germs which are the necessary accompaniment and cause of that fermentation; also by evaporation, a portion of acids holding the albuminous matters in solution are driven off, whereby the albumen is coagulated and rendered insoluble. But heat is most valuable as an aid to the action of chemical preparations upon the juice, increasing the energy of the reactions set up, and thus greatly reducing the duration of the operation. Hence heat is now universally used in recognised processes of defecation and clarification.

Steam Defecators and Clarifiers.—As the degree of heat employed is a matter of vital importance, it is most conveniently employed in the form of steam, that being readily controlled.

Fig. 49 represents respectively an elevation and plan of a steam defecator made by Fawcett, Preston and Co., Liverpool. The part B is composed of a copper, spherically-shaped lining, mounted in a cast-iron casing, to which high pressure steam is admitted. The upper part A is a light curb of copper or iron to give capacity, and is clothed with lagging to prevent escape of heat. C D are pipes for juice and water; E is the steam-cock; F the cock for drawing off the defecated contents; and G a swivel-mouthpiece to direct the contents of the defecator as required into the clear-juice gutter, the turbid-juice gutter and the washings-gutter. As the steam condenses in the double bottom of the defecator, the water flows away through the condense-water box H.

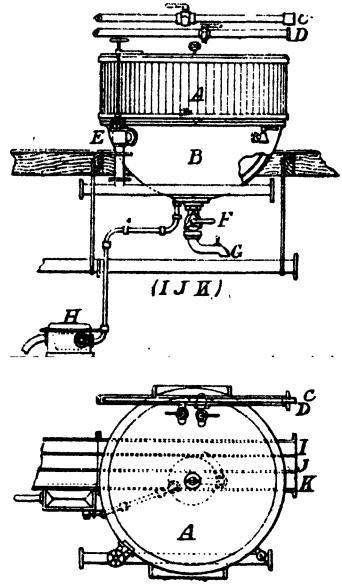

FIG. 49.—STEAM DEFECATOR.

Lately many planters have adopted another system of defecating. Instead of providing 4, 8, or 12 separate defecators, with corresponding equipment of double bottoms, cocks, and pipes, they establish a powerful juice-heater, or vessel full of tubes fixed between two tube-plates. The steam is outside the tubes, and the juice from the mill traverses the space inside the tubes. If the mill gives 1500 gallons of juice per hour, a heater with 300 square feet of surface will deliver the

whole into say 3 empty tanks of 500 gallons each; there the juice is defecated and left to subside. By using a juice-heater and 3 tanks the same result is obtained as by a costly steam-boiler working at high pressure and four very costly defecators with their mountings.

Fig. 50 represents elevation and plan of a steam clarifier and evaporator, made by Fawcett, Preston and Co., Liverpool, which is used for treating the syrup after it leaves the triple-effect (see p. 279). It is a cylindrical vessel provided with a steam-worm B fitted in the lower part; at the upper part, a border and gutter is formed, into which the scum is brushed as it rises on the syrup. The condensed steam in the shape of hot water passes through the trap D which has a float and cock to prevent uncondensed steam from passing uselessly away. The exterior A is lagged to economise steam by preventing the syrup from cooling. Every means must be adopted to save heat and fuel in a sugar factory, as it may be stated generally that 240 H.P. of steam are required to make a ton of sugar per hour, or 20 H.P. per hour for 12 hours; and in many sugar-producing countries, coal at the furnace-mouth costs 3*l.* a ton.

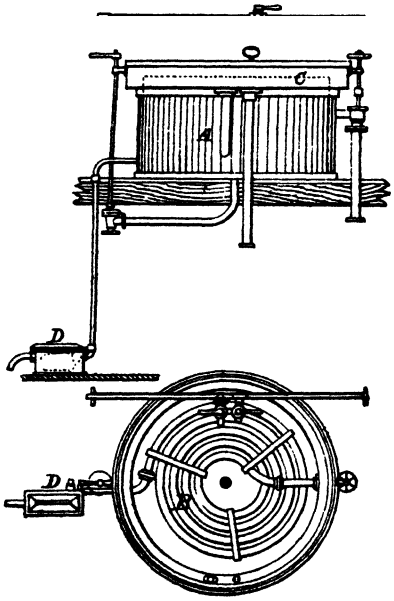

FIG. 50.—STEAM CLARIFIER.

The open-top juice-heater or sap warmer, made by Manlove, Alliot and Co., Fig. 51, consists of a strong vertical cylindrical wrought-iron shell with tube-plates at top and

bottom, top distributing chamber with vertical division, and a conical bottom with large clip valve and run-off cock admitting of the heater being emptied and the bottom chamber readily cleaned out. The heating surface consists of a large number of solid drawn brass tubes of small diameter, with special fixing in the tube-plates which latter are arranged to admit of the expansion of the tubes without leakage. Exhaust steam from the factory engines is admitted into the vertical chamber surrounding the tubes, and the condensation water is withdrawn automatically by means of a steam-trap. Any surplus steam not utilised escapes to the air through a back pressure valve loaded to a few pounds above atmospheric pressure. Raw juice from the mill is pumped up into one of the divisions of the top chamber, passes downwards through a brass strainer and through one-half of the tubes into the bottom chamber, thence upwards through the remaining half of the tubes into the top chamber, from which it overflows into a gutter or pipe, and is led off to the clarifiers. Any sediment collecting in the bottom chamber is withdrawn by the clip-valve already mentioned. The tubes can be cleaned at any time without interfering with the flow of juice. This heater can be readily inserted into any existing length of gutter in a factory without altering the present levels of the machines, and at the end of the day's work the few gallons of liquor remaining in the heater can be run off into a bucket and carried to the clarifiers or led down into the scum tank. In the many factories where this heater has been adopted, a

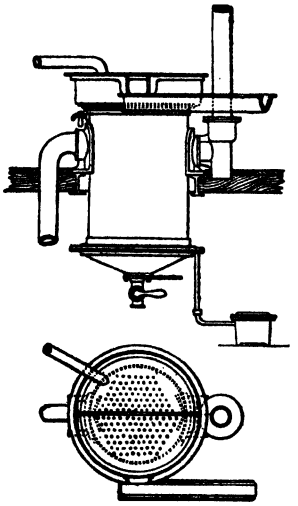

FIG. 51.—OPEN JUICE-HEATER.

marked saving has been effected in the number of clarifiers used and the time required to treat juice in them. An exhaustive series of experiments carried out with an ordinary closed-topped heater showed that the efficiency of the heating surface fell off nearly 30 per cent. in the course of half-an-hour's work, thus demonstrating the urgent necessity of providing in all such heaters means for cleaning the tubes at short intervals, and without throwing them out of work.

Fig. 52 is a section of a steam clarifier 5 feet in diameter. It consists of a hemispherical copper pan *a*, hammered out of one piece of metal, and fixed by a flange laid off to an outer cast-iron pan *b*, the space between the two pans forming a

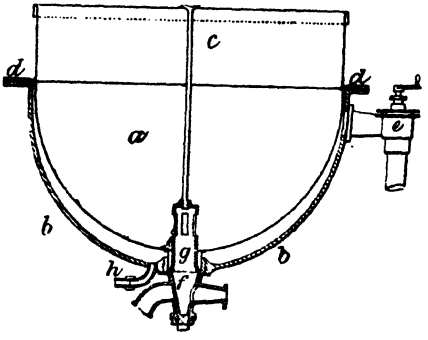

FIG. 52.—SECTION OF STEAM CLARIFIER.

steam-jacket. A copper light-course *c* is fixed on the top, and a wrought-iron ring *d* is laid on the flanges, the whole being bolted through with $\frac{7}{8}$-inch bolts, 4-inch centres. At the side is attached a valve *e* for regulating the supply of steam; and a gun metal two-way cock *f* is fitted at the bottom, the smaller branch for drawing off clarified juice, the larger for the scum. The gun-metal plug *g*, with copper rod and handle, ground into the top of the cock *f*, is withdrawn when the scum and heavy matters are to be let out. At the bottom of the cast-iron pan *b*, is inserted a small wrought-iron pipe *h*, by which the water is carried off to the condense-box.

Fig. 53 shows a section of the self-acting condense-box (steam-trap), through which condensed water from the various vessels passes on its way to the boiler-feed cistern. The cast-iron box *a* is fitted with a cover *c*; *b* is a copper float, with a pin at the top which slides vertically in a groove in the cover *c*. The float is connected at bottom with a simple valve arrangement *d*, which it opens when a sufficient quantity of water has accumulated in the box to raise it. The condensed water can thus flow away without any escape of steam.

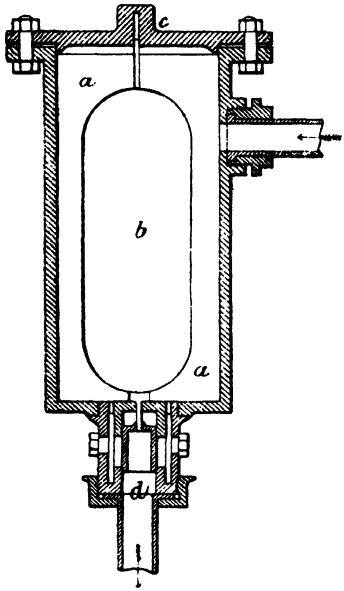

FIG. 53.—CONDENSE-BOX.

The use of the clarifier may be described in general terms as follows. The juice in the clarifier is raised to a temperature of 80° C. (176° F.), and sufficient milk of lime is added to neutralise the acid in the juice. The heat is then continued till a scum, consisting of impurities present in the juice, has risen to the surface, and appears about to crack. The time occupied in this should be about 10 to 12 minutes from the commencement of the operation. The steam is then shut off, and the liquor is allowed to subside for 15 to 20 minutes, when the scum will be found to remain at the top; some heavy matter will have fallen to the bottom, and between them will be the clarified cane-juice, clear and of a pale straw-colour. The clarification being complete, the two-way cock is first turned on to the smaller aperture, until the top scum begins to appear; the cock is then turned to the large way, and the plug is taken out. The heavy matter at the bottom and the

top scum are conveyed to a cistern, whence it is forced through a filter press to separate the solid impurities.

Fig. 54 shows a series of hemispherical clarifiers, with double bottoms, as made by Manlove, Alliott and Co., Nottingham. This type of clarifier consists of a cast-iron hemispherical outer bottom and copper inner bottom, usually made strong enough to allow of steam of the full pressure of the factory boilers being admitted to the space between them. The parallel sides are made of brass, with a strong rolled rim at top. The cast-iron bottom is provided with feet, which serve to carry the clarifier on the staging. An arrangement

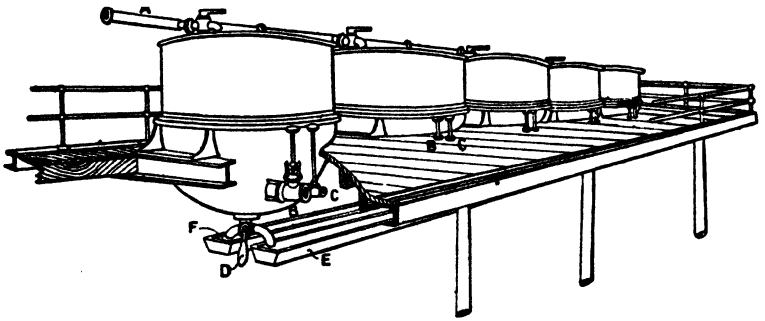

FIG. 54.—DOUBLE-BOTTOMED CLARIFIERS.

of 5 such clarifiers is shown. A is a copper pipe conveying raw cane juice from the juice heater, or direct from the juice pump on the mill, and is fitted with a large gun-metal cock for filling each clarifier. As soon as the copper bottom is covered with juice, steam is admitted by the valves B or C—B for exhaust steam from factory engine, and C for high-pressure steam direct from the boilers. The clarifier is filled to within a few inches of the top, lime or other chemical is added, and the heating is continued until a thick scum forms on the top, which, after a time, cracks and begins to break up. Steam is then shut off, and the sediment is allowed a few minutes to settle to the bottom.

The discharge cock D is fixed on a heavy gun-metal neck fitted to the copper bottom, and extending through the cast-iron bottom, with suitable means for obtaining a steam-tight joint at outlet. The upper part of the neck is furnished with a hollow plug, extending nearly to the top of the clarifier, and provided with a handle by which it can be lifted out when desired. A series of slots are formed in the plug a few inches above the bottom of the clarifier. The cock D being opened, the clear juice flows out through the slots, plug, and cock, and into the clear juice gutter E, which carries it to the settling tanks. This is continued until the level of the juice in the clarifier falls to the level of the slots, and the dirty juice begins to appear. The cock is then shut off from the clear juice gutter, and opened to the foul juice and dirt gutter F, and the plug is withdrawn, when the remaining sediment and scum are run off into F, and thence to the scum room for treatment.

To obtain the best results from such clarifiers, the depth must not exceed a certain proportion of the diameter. A clarifier of large capacity may be made very cheaply of small diameter, with high parallel sides, but of course at a great sacrifice of heating surface and efficiency in working.

Chemicals.—Of these the most important and hitherto most widely used is slaked lime; following it come sulphite of lime, sulphurous acid, and sundry special compounds, as well as antiseptics.

Lime.—The word "defecation" implies the removal of the fecular matter, or the breaking up of the albuminous compounds. This is effected to a certain extent by heat, which volatilises a portion of the acid holding the albuminous matters in solution, whereby the albumen is coagulated and rendered insoluble. But this result is much more completely attained by the simultaneous application of a strong alkaline earth, such as lime, which combines with the liberated acids. It must be borne in mind, however, that any excess of lime

beyond what is required to neutralise these acids, will redissolve the coagulated albumen, and preserve it in a state of solution, until the excess of lime is again neutralised by addition of acid. The operation which is called "tempering," is thus obviously one of extreme delicacy.

The first point to be ascertained, when any pretence is made to working on a rational system, is the exact amount of lime required by a given quantity of cane-juice. A simple method of doing this has been described by Dr. John Shier, in a little pamphlet published by Griffin and Sons, Kingsway, London, who are also makers of the apparatus employed.

A bottle containing exactly 250 septems * ($\frac{1}{40}$ gallon) of juice is filled with the filtered cane-juice, the specific gravity of which has just been taken. If any air bubbles are present, they are got rid of by causing the bottle to overflow. By pouring out a little of the juice, or displacing it by introducing a glass rod, the surface of the juice is made to coincide with the mark on the neck of the bottle, and the outside of the bottle is wiped. The contents of the bottle are then transferred to a beaker. A spirit lamp is kindled, and screened by a tinplate cylinder provided with a grate. On the grate is placed the beaker with the cane-juice, and the whole is surrounded with a tinplate cylinder, to protect the lamp from currents of air. The cane-juice is stirred occasionally with a glass rod till it boils. After boiling for about a minute, a graduated septem measure is filled to zero (0°) with clear saturated lime-water, and the lime-water is poured from it to the cane-juice, a few drops at a time, till a drop of the juice, applied by the point of a glass rod to a slip of neutral litmus-paper, neither reddens nor blues it, but simply wets it without changing its colour, just as distilled water would do. (The indications of the test-paper are extremely delicate, and it takes some practice to accustom the eye to judge of very slight changes of colour.) This may be called the point of

* A septem is 7 grains.

neutrality; when it is attained, the beaker is taken off the lamp, and its contents are allowed to settle for a minute.

If a coagulum, consisting of pretty large flakes, is seen floating about in the perfectly transparent although slightly coloured liquid, and readily separating and subsiding to the bottom of the vessel, the point of proper clarification has been attained—that is to say, the point of neutrality and the point of proper clarification coincide. The exact number of septems of lime-water used is then noted. If, however, the flakes are small, and do not readily separate from the juice, and the juice is not perfectly transparent, it is not in a condition to filter readily, and, on boiling, would throw up scum, and thus lead to loss of juice—in a word, it is not properly clarified.

The beaker is replaced over the lamp, its contents are again brought to a boil, and more lime-water is added, in small portions at a time, till the indications of proper clarification, as above described, are attained. The juice will now be capable of ready filtration, and, although transparent, will have a deeper tint than if excess of lime had not been required in clarification. The total number of septems of lime-water being noted, the calculation as to how much quicklime is required for a given number of gallons of juice is easy: Thus, suppose 250 septems of cane-juice to have required 20 septems of lime-water to bring it to the neutral point, and 10 more to the point of proper clarification, then $30 \times 40 = 1200$, the number of septems of lime-water that 1 gallon of juice would have taken; but every septem of saturated lime-water at the temperature common in tropical boiling-houses contains 0·00863 of a grain of quicklime, therefore $1200 \times 0{\cdot}00863 = 10{\cdot}36$ grains of quicklime required by a gallon of juice; and it is merely necessary to multiply this amount by the number of gallons' capacity of the clarifier, to find the weight, in grains, of the lime required by the charge of the clarifier. Thus, if the clarifier contained

500 gallons, it would with such cane-juice require 5178 grains, or, in round numbers, 11¾ ounces of good quicklime.

Dr. Shier has compiled a very useful little table, showing the quantity of quicklime in avoirdupois ounces and drams necessary to be added to 100 gallons of cane-juice, to clarify it properly, according to the indications of the lime-water test :—

Test	Quicklime		Test	Quicklime		Test	Quicklime	
septems	oz.	dram.	septems	oz.	dram.	septems	oz.	dram.
5	0	6¼	37	2	14¾	69	5	7
6	0	7½	38	3	0	70	5	8¼
7	0	8¾	39	3	1¼	71	5	9½
8	0	10	40	3	2½	72	5	10¾
9	0	11¼	41	3	3¾	73	5	12
10	0	12½	42	3	5	74	5	13½
11	0	14	43	3	6¼	75	5	14¾
12	0	15¼	44	3	7½	76	6	0
13	1	0½	45	3	8¾	77	6	1¼
14	1	1¾	46	3	10	78	6	2½
15	1	3	47	3	11¼	79	6	3¾
16	1	4¼	48	3	12½	80	6	5
17	1	5½	49	3	13¾	81	6	6¼
18	1	6¾	50	3	15	82	6	7½
19	1	8	51	4	0¼	83	6	8¾
20	1	9¼	52	4	1½	84	6	10
21	1	10½	53	4	3	85	6	11¼
22	1	11¾	54	4	4½	86	6	12½
23	1	13	55	4	5½	87	6	13¾
24	1	14¼	56	4	6¾	88	6	15
25	1	15½	57	4	8	89	7	0¼
26	2	0¾	58	4	9¼	90	7	1½
27	2	2	59	4	10½	91	7	2¾
28	2	3¼	60	4	11¾	92	7	4
29	2	4½	61	4	13	93	7	5¼
30	2	5¾	62	4	14¼	94	7	6½
31	2	7	63	4	15½	95	7	8
32	2	8½	64	5	0¾	96	7	9¼
33	2	9¾	65	5	2	97	7	10½
34	2	11	66	5	3¼	98	7	11¾
35	2	12¼	67	5	4½	99	7	13
36	2	13½	68	5	5¾	100	7	14¼

The column marked "test" shows the number of septems of lime-water found by experiment to be required to clarify 250 septems of cane-juice. Opposite the number thus found, and under the head of "quicklime" is given the weight of

quicklime necessary to clarify 100 gallons of the particular cane-juice submitted to the test.

For example the case before supposed may be taken where the experiment requires 30 septems of test-liquor. Against 30 in the table, stands 2 ounces 5¾ drams, which is the weight of quicklime required by 100 gallons of the cane-juice. If the quantity of juice is 500 gallons, then 2 ounces 5¾ drams multiplied by 5 gives 11 ounces 12¾ drams.

As a rough general rule, the proportion of one septem of lime-water to 250 septems of cane-juice is nearly equal to 1¼ dram of quicklime to 100 gallons of cane-juice. Hence the number of the test, multiplied by 1¼ dram, gives the weight in drams of quicklime required for 100 gallons of cane-juice. This result is, however, 1 per cent. too low.

The test should be frequently repeated.

In the experimental test just described, saturated lime-water is used, because it is easy to have it of uniform strength; but on the large scale, to use lime-water would entail enormous dilution of the juice, and great waste of fuel in the subsequent evaporation. Hence so-called "milk" or "cream" of lime is resorted to. The lime used must be thoroughly burned, quickly slaked with clean water (enough water being used to impart a creamy consistence), and carefully filtered through a very fine wire sieve, in order to remove all fragments of flint and unburnt and unslaked lime. The weight of these impurities removed must be deducted from the amount of quicklime (unslaked lime) originally taken. It must be remembered that quicklime can only be kept in perfect condition in closed vessels.

It is possible that a still better and more exact graduation of the quantities of lime to be employed might be effected by using a solution of sucrate of lime prepared by dissolving hydrate of lime (slaked lime) in strong syrup to saturation. Such a solution may be settled, decanted, or filtered off clear, keeps well in close vessels for a long time, and contains a

large quantity of lime in solution. The small experiment just described, by which the quantity of milk of lime to be added is settled, might be performed by means of a titrating solution made by diluting to a known extent some of this same sucrate syrup. The quantity of this dilute sucrate necessary to clarify a given sample of juice would indicate directly the quantity of strong sucrate syrup necessary for the clarification of the whole of the juice to be treated, so that the operation might be made both more rapid and more exact, and the operator would be rendered independent of any discrepancies arising from impurities in the lime used or those arising from the relation of the strength of the lime to that of the lime-water employed for testing as at present.

The juice being tested as to its density and acidity, and the milk of lime being prepared, the twin process of defecation and clarification may commence. There are several ways of carrying it into operation.

One of the most simple, and practised on many estates, is that known as the process of "cracking." It necessitates the use of two or more clarifiers, and is conducted as follows. The strained juice is admitted into the clarifier till sufficient has accumulated to prevent any injury by heat. Fire is then made under the clarifier (or steam is admitted into the jacket or coil), and by the time it is full of liquor, the temperature will have risen considerably, probably to about 54° C. (130° F.). The temper lime is then added, thoroughly incorporated, and the heating is continued. A thick greenish-yellow scum soon appears on the surface, and rapidly increases in thickness, changing colour at the same time from exposure to the air; as the temperature approaches the boiling-point—say at about 79° to 82° C. (174° to 180° F.)—numerous minute air-bubbles rise up, and form a frothy layer under the thick scum. By-and-by, these air-bubbles force their way at a few points through the dark dirty-looking scum, which soon cracks in several places, and the white frothy bubbles appear

in the cracks. When this point has been attained, the heat is quickly withdrawn, and the contents of the clarifier are allowed to rest for 15 to 30 minutes or more. Ebullition is carefully avoided, because it would break up the floating scum, and diffuse it through the mass of the liquor.

The time allowed for settling depends on a variety of circumstances—the nature of the juice, the proper apportioning of the lime, and the time that can be allowed consistently with getting through a good day's work. After settling, there is found a layer of coagulum still at the top, and another layer at the bottom, while the great body of the liquor is tolerably bright and transparent, with a wine-tint more or less deep, and with a quantity of minute flakes floating thickly in it. If it is hazy from minute, generally diffused, solid particles, the operation is incomplete; and either the heat has not been great enough to clarify it, or the lime has not been used in sufficient quantity. After standing as above described, the clear liquor is run off into the evaporating apparatus; the scum and sediment, with the considerable quantity of juice that invariably accompanies them, are usually carried to the skimmings-cistern, to be used in setting up liquor for rum.

When the clarifier has either a coil of steam-pipe or a steam-jacket, it is much more manageable, and it is generally so arranged that little loss of time occurs, for as soon as there is enough liquor in the clarifier to render it safe, the steam is turned on in such measure as to attain the desired temperature by the time the vessel is full of liquor. Fire-clarifiers are generally discharged by a stopcock near the bottom till the liquor begins to run muddy. Steam-clarifiers are discharged by a valve in the bottom in connection with a tube that rises 4 to 6 inches above the bottom, so as to disturb the sediment as little as possible.

This method is open to many grave objections, the principal of which are the following: (1) That clarification is

very rarely attainable below the boiling-point of the juice; the consequence is, that the juice wants brilliancy and transparency, and has minute, light, floating particles, which render the process of filtration extremely slow and unsatisfactory. (2) This finely divided floating matter is thrown up as scum during the concentration, causing much waste of juice in the skimmings.

To overcome these drawbacks, Dr. Shier introduced the following modification. The strained juice is admitted into a clarifier, and boiled briskly for 5 minutes; the scum that rises is constantly beaten down by a wooden or wicker plunger. While boiling, the proper quantity of temper lime is added, this temper lime being mixed with a proportion of clay batter, gypsum, or whiting batter; the boiling is continued for a few minutes, with constant stirring and beating down the scum. Neutralisation being effected, the whole contents of the clarifier are rapidly withdrawn into a subsider, and left till all the coagulated flocculent matter has subsided to the bottom of the vessel. The clear juice is drawn off without disturbing the sediment, and passed through a filter into a cistern. Here any excess of lime which may have been used is corrected by the very careful addition of dilute sulphuric acid, the quantity of acid necessary being previously ascertained by a simple test, before applying the lime to the juice. It is best for the juice to be exactly neutral, but the safest course is to cease adding acid when the alkaline reaction becomes extremely feeble. Were the lime left in considerable excess, the sugar would be dark coloured; were the acid in excess, the grain would be fine and soft, and part of the sugar would become inverted and rendered uncrystallisable. The advantage of adding clay or other heavy matter to the temper lime is to cause the impurities to form a sediment which may be filtered off, instead of a scum which needs skimming. It is said to effect a great saving (20 per cent. is spoken of) of juice.

Defecation of Juice at a high Temperature.—During the

last few years it has become quite an ordinary practice in cane sugar factories to remove the albumen from the juice, by heating it for a short time to a temperature above the boiling-point, and consequently of course under pressure. Graeff and Geister, have taken out a patent in the U.S.A. for an improvement on this way of working. They first apply pressure to the juice when contained in a closed vessel by means of a pump, and then heat the juice to the required temperature by a steam coil.

They recommend submitting the juice to a pressure of 30 lb., and a temperature of 125° C. for about 15 minutes.

Another U.S inventor, L. Van Tresckow, in a patent taken out during this year, effects the same object by pumping the juice through a series of copper pipes surrounded by high pressure steam.

The apparatus consists of a cylindrical vessel placed in a horizontal position and containing the copper tubes which are connected in such a way that the juice travels a set of six, sixteen times backwards and forwards through the length of the cylinder.

The rate of flow of the juice is so adjusted as to yield the most satisfactory results.

Fawcett, Preston and Co., of Liverpool, have, we understand, been turning out for some time past an apparatus of a very similar kind, in which the juice is passed through a copper worm heated by steam.

R. A. Robertson has patented in England a process for defecating juice by means of high pressure steam, which comes in direct contact with the juice, while the latter is being pumped through the apparatus. The juice is afterwards filtered under the same pressure.

The Deming system of superheat clarification, first practically experimented on at the Palo Alto plantation, season 1891–2, comprises a complete treatment of the juice from the time it leaves the mill until it reaches the evaporators. From

the mill the juice is carried to liming tanks of large capacity, which allows ample time for careful and even tempering. An air compressor is furnished with these, which blows a strong current of air in at the bottom, and by keeping the juice well stirred prevents any settling of the mud present, and ensures a thorough mixture with the lime; all settling is thus postponed to the settling tanks, where, by reason of its coagulated and heavy nature, it quickly and readily falls to the bottom. The liming tanks discharge into a pump tank, which, being deeper keeps the suction pipe of the pump constantly sealed and prevents any possibility of air entering the machine and retarding its action. The pump forces the juice under pressure through the superheater, first through the absorber, then through the digester or high temperature heater where it is heated to 230°–250° F., and finally again through the absorber, when it is cooled down to 200° F., giving up its surplus heat to the incoming cold juice. A very small quantity of juice is required to fill this machine, and during the operation it is under heat but 45 seconds, being discharged at a temperature several degrees below that possible in the open clarifier system. It then enters a series of continuous settling tanks, from which the juice is constantly decanted to the evaporators. There are no surface scums to require brushing or skimming, everything being precipitated with the mud to the bottom of the tanks, where they are drawn off at short intervals. It is an admitted fact that a thorough settling of the suspended matter is far more efficient than any method of juice filtration. Even were it possible to secure an efficient and desirable juice filter, the area necessary would be fully ten times that required by the mud presses; and, furthermore, this long and enforced contact of the juice with its precipitated matter causes it to take into solution a great many impurities, and therefore produces less sugar, and of an inferior quality. In the continuous settler system this is not the case, for the natural currents induced cause the juice and the mud to be

continually and rapidly flowing away from one another. The juice containing all the precipitate must enter the cone bottoms of the continuous settlers, where the mud which is heavy, remains until drawn off for filtration, while the juice merely ascends and escapes clear at the surface, the two materials being thus removed from opposite ends of tanks, as they should be. This system uses but one-half to two-thirds of the amount of lime required by the open process, because lime more readily combines with cold juice, and the instantaneous application of high heat increases the action of the lime during the process of clarification. In the open clarifier system there occur great losses of heat by radiation from the surface of the liquor and the exposed sides of the tanks, and also by evaporation during the process of heating and skimming. The Deming system heats in closed vessels, well covered with non-conducting material. The system is neat, clean, tidy, uniformly certain, not wasteful, mechanically automatic and continuous. With the proper grouping of the different parts of the apparatus one attendant will sulphur, weigh or measure the juice, sample it, and apply the lime, continuously operate the superheater, and remove the precipitated mud from the settlers and deliver the settled juice in a continuous stream to the evaporators. Thus one man alone can handle the juice from the time of leaving the mill until it reaches the evaporators at the rate of 3000 tons of cane daily if desired.

There are seventeen sizes of apparatus perfected, ranging in capacity from 68 tons per 24 hours to 3000 tons. One or more of nearly all sizes are in practical operation.

From experiments with Deming's system made at the Kemanglen estate, Tegal, Java, in 1899, H. C. Prinsen Geerligs states that it results that during superheating and during the long stay in the large settling tanks no sucrose is broken up, and no sourness arises, so that from a chemical point of view, Deming's superheat clarification stands in no

respect behind the usual defecation process, whilst its mechanical advantages are many.

A novel and ingenious process of defecation is that of Weinrich, the object of which is to defecate the juice completely while still in the cane, and to retain most of the defecation scum in the begass, thus dispensing with defecation and filter-press plants, avoiding any decomposition of the juice and giving a high extraction and a purer juice. The cane is finely shredded, then treated with hot milk of lime or lime-water until neutral or slightly alkaline, and the whole mass heated to 85° C. (185° F.). It is then put through the ordinary milling process and the juice extracted. The begass retains the greater part of the impurities, and leaves a juice which is purer and comparatively clear. If necessary, the alkalinity may be reduced with phosphoric, carbonic or sulphurous acid, and the juice filtered through a mechanical filter or a sand filter before it enters the triple effect.

Hatton's Continuous Defecator.—In the Hatton system of continuous defecation, the limed juice flows in a constant stream by the juice-pipe A, Fig. 55, through the regulating cock B, into the defecator by the pipe C, which delivers it to the bottom of the copper double bottom of the defecator. As the defecator fills up, the juice overflows and fills up the vessel D, which is closed at the bottom, and then finds its way up the internal pipe E, and so away by the discharge branch F, into the clear defecated juice canal, whence it passes direct to the supply tanks, feeding the multiple-effect evaporator. The juice, being heated immediately it enters the defecator, rises of its own accord without meeting any downward convection currents, as happens in ordinary defecators where cold juice is discharged on the top of juice already partially heated. The scums form, as they rise, a thick layer on the top of the liquid, and prevent any loss of heat from its surface, or inversion from exposure to the atmosphere. The vegetable impurities, always floating and ascending, collect

under the mass of scums and add to them, with the curious result that although the heat never exceeds 210° F., the scums become comparatively dry and are pushed up several inches

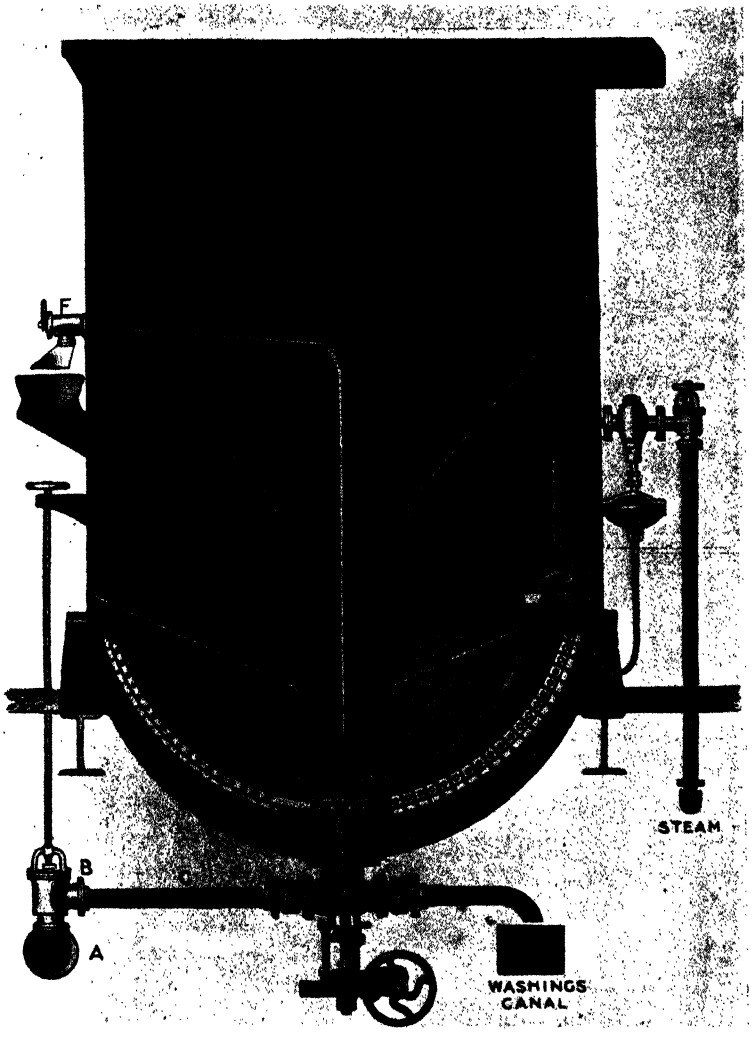

FIG. 55.—HATTON'S CONTINUOUS CANE JUICE DEFECATOR.

above the rim without overflowing. These scums contain so little sweet that it is not worth while to treat them in filter-presses or otherwise. They are removed from time to time and sent to the fields as manure. Any earthy or other matter that may be precipitated and fall to the bottom might, if left there, interfere with the heating efficiency of the copper bottom. It is therefore removed once in twelve hours by gently revolving the scraper, and so loosening the incrustation, and then suddenly opening the bottom discharge cock for a moment, allowing the rush of liquor to carry out the deposit. The juice, freed from its impurities, flows over the edge of the vessel D to the bottom without carrying down any of the light vegetable matter in suspension, so that the juice ascends the internal pipe, and leaves the defecator in a clear state. The temperature of the juice is automatically kept constant by means of an ingenious heat regulator consisting of a copper pipe closed at one end and fixed inside the defecator. This copper pipe follows the curve of the bottom of the defecator and is filled with water. The expansion and contraction of the water in the pipe cause the diaphragm in the heat regulator to rise and fall, and shut off or open the steam inlet valve, which is of the balanced type. The defecator can work continuously for several days and nights. If work is not carried on at night, a little lime scattered over the top of the scum cake will prevent any deterioration of the juice, while the scum cake itself will prevent any appreciable loss of heat, which is also maintained by the self-acting steam valve. In a defecator of 1000 gallons capacity, 12 minutes are required to fill it up, after which 1000 gallons of juice run out of it per hour in a steady stream, so that half the capacity of Hatton defecators are required to deal with the same quantity of juice as are needed with the ordinary existing defecators which lose time in filling up, subsiding, drawing off and washing out. Fawcett, Preston and Co., Ltd., Liverpool, are the sole licensed manufacturers in the United Kingdom.

Lime Bisulphite.—The bleaching and cleansing action of sulphurous acid led to experiments upon its applicability to the defecation of cane-juice, and the first form in which it was employed was as a compound with lime, known as bisulphite of lime. One of the most successful methods of using it has been that adopted by Dr. Shier, in British Guiana, and is as follows: About 1 per cent., or even less, of solution of lime bisulphite is added to the juice as soon as possible after it is extracted, or even while it is being extracted. Heat is then applied, and after the juice has been boiled and stirred for a few minutes, a mixture of cream of lime and clay batter is added. The exact quantity of cream of lime is ascertained by a preliminary test as described on p. 220, sufficient only being used to produce actual neutrality. After boiling for 5 to 10 minutes, and beating down the scum, the contents of the clarifier are run into a subsiding-vessel, and thence filtered out for concentration. The subsidence is not efficient without the addition of clay batter, or some similar weighting matter, but the syrup has a very fine colour, and gives a superior-looking muscovado sugar. An objection is the high price of the lime bisulphite.

Sulphurous Acid.—The next step was the separate introduction of the lime and the sulphurous acid into the juice. This system has grown into very wide use in the United States, West Indies, and other places, and has been the subject of several patents and much litigation. Its invention is generally ascribed to Dr. Icery, of Mauritius. There are two principal ways of carrying it into effect: (1) By first passing sulphurous acid gas into the juice, and then adding lime; this is known as Col. Stewart's process, patented by him in Louisiana and most of the West Indies, and adopted in Egypt and elsewhere. (2) By first adding the lime, and then passing the sulphurous acid gas; this is Beanes' system, chiefly employed in Cuba, but also in Java and Australia. The effect is probably identical in both cases. The first described plan

is by far the most commonly adopted, and hence will be selected for description.

As fast as the raw-juice tank is filled, its contents are raised into the clarifiers, steam at a pressure of 60 lb. per inch being turned on as soon as the copper bottoms are covered. When the juice begins to boil, it is stirred with a copper pipe, through the lower perforated end of which sulphurous acid gas is injected, and allowed to dissolve in the juice, till the colour of the latter becomes considerably lighter, and a decided separation of the flocculent matter takes place. The proper quantity of sulphurous acid to be added varies with the state of the canes and the weather, and can only be determined by practice. Approximately, a clarifier of 450 gallons would require the combustion of $\frac{1}{10}$ lb. to $\frac{1}{2}$ lb. of sulphur.

The sulphurous acid is forced into the juice by means of a pump driven by a small independent engine, the speed of which can be adjusted to the quantity of gas required. The gas is generated by the combustion of crude sulphur in an oven, the air necessary for the purpose being sucked through by the pump; and, as the combustion depends on the supply of air, and the latter on the speed of the pump, the whole apparatus is self-adjusting.

As soon as the boiling juice is sufficiently "gassed," milk of lime is added at the rate of $\frac{1}{2}$ gallon to 3 gallons per clarifier, until the liquid is ascertained by the litmus-paper test to be perfectly neutral. The liquid is then let out by cocks in the bottoms of the clarifiers into subsiders, where it is allowed to stand till the impurities have settled down, when it is decanted by means of sliding overflows into the clarified-juice tank. After the juice is properly clarified, it is perfectly clear, and about the colour of Sauterne wine. The whole operation of clarifying and subsiding takes about $1\frac{1}{4}$ hour; the subsidence and decantation occupy about 40 minutes; hence, 12 subsiders, having a capacity of 450 gallons each, can readily get through 8100 gallons of juice per hour.

The lime used is the ordinary produce of the native limestone; it is of good quality, and is mixed in two circular tanks, fitted with agitators. The contents of one of these tanks is allowed to subside, so as to yield clear lime-water, used in washing down the cane-mills, juice-gutters, and pipes. The milk of lime from the other has a density of about 10° B., and is mixed in the proportion of 9½ parts by weight of cold water to 1 part of lime; an equal weight of China clay is added to assist mechanically in carrying down the impurities.

The scum which collects in the bottom of the subsiders is let out by valves, and runs down gutters to either of two tanks, from which it is filled, by means of 3-inch indiarubber hose, into linen bags placed in hydraulic presses. The juice is then separated from the solid scum. The solid scum forms about 5 per cent. of the weight of the raw juice. The clear pressed out juice is pumped at once into the clarified juice tank, and the solid refuse is thrown away. The subsiders are washed down by a hose at the end of each operation, the foul water being run off through wash-out valves and pipes.

The clarifiers, 6 feet 6½ inches in diameter, and 2 feet 6 inches deep, up to the skimming lip, hold an actual working charge of 450 gallons of cold juice. They consist of copper pans 1 foot 6 inches deep, bolted into cast-iron steam-jackets, and surmounted by galvanised iron cylinders, 1 foot 6 inches deep, in which skimming overflows, 2 feet wide, are formed. The heating surface of each is 52·58 square feet. Steam at 60 lb. pressure is admitted by 2½-inch valves, and the condensed steam is taken off by self-acting traps, one to each clarifier. The juice is let out by 4-inch cocks, worked by levers placed beyond the hand-rail over the subsiders; and ½-inch pet-cocks, to ascertain the state of the steam-jacket and let out any air, complete the equipment.

Steam is turned on as soon as the copper bottoms are covered; the juice, usually at the temperature of 22° C. (72° F.) when pumped in, begins to boil in about 20 minutes,

and is kept boiling about 5 minutes. A small portion of the impurities floats on the surface, and is skimmed off at the lips provided for the purpose, whence the skimmings flow by suitable shoots to the tanks which receive the rest of the scum.

The mean power of these clarifiers in heating water to the boiling-point proved to be:—

Mean duration of experiments						24 minutes.	
Mean initial temperature of water						19° C. (67° F.)	
Mean steam pressure						42·1 lb. 143° C. (289° F.)	
Mean weight condensed steam						742 lb.	
Mean weight of water heated						4558 lb.	
						Lb.	
Units of heat in condensed steam						742 × 990 =	734,580
Heat spent in heating copper		840 lb.	×	145	× 0·095	= 11,571	
,, ,,	cast iron	2828 lb.	×	145	× 0·129	= 52,900	
,, ,,	wrought iron	567 lb.	×	145	× 0·113	= 9,290	
,, ,,	water	4558 lb.	×	145		= 660,910	
							734,671
Units of heat per square foot per difference of 1° per hour in heating water						210·2	
Loss in heating clarifier, by radiation, etc., etc. ..						11·1 per cent.	

In some other experiments with a clarifier of similar construction, but of only 12 gallons capacity, the trials were carried further, and the rate of boiling was ascertained as well, both for water and syrup, the latter being a solution of 9 lb. of molasses and 4 lb. of sugar in 90 lb. of water, equal to juice at about 8° B. The results were:—

	Water.	Juice.
Units of heat per square foot per difference of 1° per hour, heating	260	219
,, ,, ,, ,, ,, ,, evaporating	606	521

As usual, in both water and juice, heat was transferred about 2⅓ times more quickly in boiling than in heating, no doubt in consequence of the greatly more rapid circulation; and in both operations, the addition of 14½ per cent. of sugar seems to have reduced the efficiency of the surface by about 15 per cent.

The subsiders, 12 in number, corresponding to the clarifiers, are plain cast-iron tanks, 6 feet square and 2 feet 6 inches

deep, with outside flanges and angles rounded to a 4-inch radius for facility in cleaning. Each tank is fitted with a brass 5-inch Appold overflow, actuated by a quick-threaded screw and hand-wheel, for the purpose of decanting the clear juice, which is discharged into a wrought-iron tank running across the mill under all the subsiders; while for letting off the scum, and for the subsequent washing, two 3-inch brass plugs are provided, connected, the one with the scum-gutters, and the other with the waste-water pipes. The clarified juice takes about ½ hour to subside, the China clay added with the lime assisting mechanically in carrying down the impurities. Hydrants with 1-inch indiarubber hose and brass nozzles and cocks, are provided for washing out the clarifier and subsiders, and for sluicing the stages.

Sulphurous acid gas is generated in a cast-iron D-shaped muffle, 5 feet long and 12 inches wide. A small grate under it allows the hearth to be heated in order to start the combustion of the raw sulphur; and the admission of air is regulated by a sliding cover closing up one end of the retort. The raw sulphur is introduced through a small door in the end cover by a scoop 1 inch wide, similar in form to those used for charging gas-retorts. About 62 feet of 3-inch cast-iron cooling-pipe provided with numerous cleaning-doors for removing any flowers of sulphur that might distil, conducts the gas to two duplicate double-acting pumps having cylinders of 12-inch diameter and 12-inch stroke. These are worked by belts with fast and loose pulleys from a counter-shaft actuated by a 4-horse power oscillating donkey engine, which during crop is used exclusively for the gas-pumps, the speed of which is thus easily regulated. The pumps are entirely of iron with indiarubber flap-valves, and they appear to stand very well against the action of the sulphurous acid.

From the pumps, the gas is led into a receiver containing about 114 cubic feet, or 144 times the capacity of one pump, and thence it is carried by a 3-inch main under the clari-

fier stage, a 1-inch copper branch rising between each pair of clarifiers, and terminating in a cock and indiarubber hose fitted with a copper stirring pipe, the extreme end of which is finely perforated, to allow of a uniform distribution of the gas through the body of juice in the clarifier. A loaded valve permits the escape of any excess of gas clear of the roof.

The greatest quantity of sulphur used is ¼ lb. to a clarifier of 450 gallons of juice, or 5 cwt. of sugar. Oxygen does not alter its volume in combining with sulphur to form sulphurous acid: the latter gas measures 59 cubic feet to ½ lb. of sulphur, whose combustion therefore results in 29½ cubic feet of mixed sulphurous acid and nitrogen gases, to which must be added at least as much excess of air, or, say 59 cubic feet in all, at a temperature of 15½° C. (60° F.). The factory, in full work, ought to yield 14 clarifiers per hour, for which 3½ lb. of sulphur are required, producing 413 cubic feet of gas, or rather 485 cubic feet at 66° C. (150° F.) which is about the temperature at which it reaches the pumps; hence about 6 revolutions per minute will deliver all that is required.

The skimmings from the clarifiers and the scum from the subsiders are run into two circular wrought-iron tanks, fitted at their lower ends with 3-inch cocks and indiarubber hose by means of which the two hydraulic presses are charged. These consist of cast-iron boxes 4 feet square and 12 inches deep, surmounted by inverted cylinders 18 inches in diameter and 2 feet stroke, with 12-inch trunks, the lower ends of which carry the upper pressing-tables. The scum is run into linen bags, about 12 inches wide, and 5 feet long, ranged in 3 or 4 layers, with galvanised-iron gratings between them. As each bag is filled its mouth is twisted up and laid back over itself. When the charge is complete, the water pressure—under a head of 45 feet—is turned on by a common sliding-valve, forming part of the cylinder of each press, and the moderate pressure of 2¼ tons on an area of 16 square feet thus obtained

is sufficient to express all the juice. The juice runs into a small tank, from which it is immediately pumped by a donkey-engine into the clarified-juice tank under the subsiders.

When the scum is sufficiently dry, the slide-valve is reversed and the upper table is raised, to permit the bags to be taken out and emptied of the solid residue. It was supposed that this scum, like that obtained from ordinary clarification, would readily drain through coarse cloth, and a battery of filters was prepared accordingly, with one hydraulic press to finish the drained refuse. The addition of china clay, however, completely changed the nature of the scum, converting it into a puddle, which retained the juice obstinately until subjected to a moderate pressure. The one hydraulic press proved insufficient for the new method which had to be adopted, and so a large portion of juice had to be thrown away with the scum. In the sugar-factories of our colonies and in those of other countries, the scum is generally run into the distillery together with the molasses, so that comparatively little attention has been paid to perfecting machinery for separating juice from scum.

The specific action of sulphurous acid (whether introduced in the gaseous form, or liberated from a combination in the juice) is threefold: (1) It prevents fermentation, (2) it decolorises, and (3) it causes a coagulation of those albuminous matters which are not affected by heat. These constitute the advantages to be derived from its use. On the other hand, it is so readily absorbed by the juice (up to 33 times the volume of the juice) that it can easily be applied in excess. Laboratory experiments indicate that about $\frac{1}{10}$ lb. of sulphur per 450 gallons should suffice, but this is usually exceeded in practice; the lime required for its neutralisation amounts to about 4 per cent. of the quantity necessary for tempering in the ordinary way, that is to say an extra 4 per cent. of lime is consumed. Care is needed to prevent oxida-

tion of the sulphurous acid to sulphuric acid, as the latter most injuriously affects the crystallising power of the sugar; consequently sufficient lime must always be added to ensure that any sulphuric acid formed shall immediately combine with the lime, to produce the insoluble sulphate of lime, which falls to the bottom.

By the use of sulphurous acid in conjunction with lime, it is possible to produce a grey or almost white grocery sugar, but it must not be supposed that the whiteness of the product will compare with that of refined sugar, nor that the employment of sulphurous acid will render refining unnecessary for the preparation of a pure-white sugar.

It is found to be often advantageous to assist the action of the sulphurous acid by the addition of a little permanganate

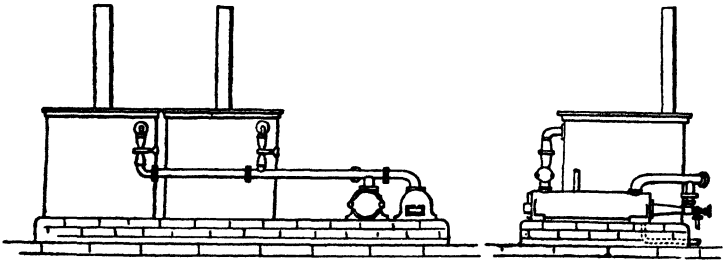

FIG. 56.—MANLOVE, ALLIOTT AND CO'S SULPHUROUS ACID PLANT.

of soda or potash. These salts are powerful oxidisers, transforming the harmless sulphurous acid to the injurious sulphuric acid; but the latter, if formed, seems to immediately attack the lime and potash (or soda) present, combining with them to produce insoluble or inert sulphates and thus having no opportunity to affect the crystallisability of the sugar.

The arrangement of sulphurous gas apparatus, as adopted by Manlove, Alliott and Co., consists (Fig. 56) of a D-shaped cast-iron muffle or furnace, in which the sulphur is placed in a wrought-iron tray and burned with a limited air

supply. The sulphurous acid gas passes from the muffle through a cast-iron pipe to a steam injector, by which it is forced through a cast-iron cooler, consisting of a circular chamber surrounded with water, and having at one end a space in which the flowers of sulphur are deposited. From the top of this condenser the gas is led by a pipe to the gassing tanks containing raw cane-juice, through which it is distributed by means of a perforated lead pipe, thus securing the full bleaching effect of the gas upon every part of the juice. The supply to each tank is controlled by a special flexible valve little liable to be damaged by the action of the gas, and the

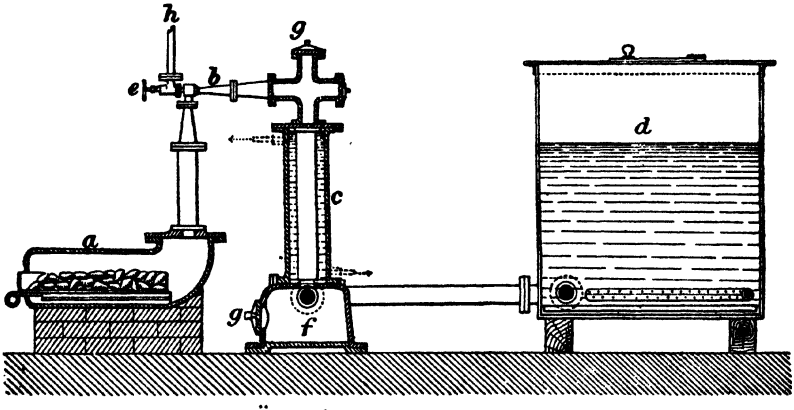

FIG. 57.—KÖRTING'S SULPHUROUS ACID SATURATOR.

tanks are covered and fitted with manholes and ventilating pipes; the gas pipes also are arranged with covers readily removable to facilitate cleaning.

An apparatus for saturating cane juice with sulphurous gas, as made by Körting Brothers, Queen Street, London, is shown in Fig. 57. The sulphur is burned in the vessel *a*, and the gas produced is drawn off by the steam-jet exhauster and blower *b*, sufficient air being drawn in to support combustion. The gas is forced through the cooler *c* and clearing box *f* into the saturating pan *d*. The cooler consists of a jacketed tube, the gas passing through the inner tube in one direction, while

water circulates through the outer tube in an opposite direction. Any particles of sulphur or other solids suspended in the gas fall in the clearing box. The handle *e* regulates the action of the whole apparatus by controlling the supply of steam coming through *h*. Doors for cleaning the pipes are provided at *g*, the whole plant is small, simple, inexpensive, and regular in action.

The sulphurous acid apparatus of Quarez consists of a small furnace of rectangular shape in which sulphur is burned in a stream of air, the fumes being drawn away by an injector through which a stream of juice is forced by means of a pump. The air is dried by passing over quicklime and introduced underneath the door which serves for charging the sulphur. Above the furnace is placed a chamber for separating any sulphur which may be sublimed, and for cooling the gas, which then traverses a long vertical water-jacketed pipe terminating in the injector. The injector of cast iron is of the usual construction, and the mixture of juice and sulphurous acid gas falls down a pipe terminating in a closed tank divided into two compartments, from one of which it overflows into another tank. The apparatus is said to be simple, efficacious and economical.

The Porak process consists in aspirating the sulphurous acid gas from a sulphur furnace by means of an injector, using water already saturated with the gas. The water and gas are conducted into a reservoir where they separate, the water being returned to the injector, whilst the gas may be distributed to any part of the factory by the pressure afforded by the column of water descending from the injector. The apparatus is applicable to all industries using sulphurous acid in the state of gas, and may be used for the burning of sulphur or the roasting of pyrites. The following are the particulars of an apparatus constructed to burn 1000 kilos of sulphur per 24 hours. The furnace is formed of a flat triangular box, made of thick cast-iron plates. The air enters along the

whole of the front, and the gas is conducted away at the apex of the triangle.

The bottom of the box is inclined slightly forward, whilst the cover is horizontal. This cover is surmounted by a tank of water for cooling purposes. The bottom of the furnace consists of a tray made of thick plate for burning sulphur, and representing a total ignition surface of 1·8 square metres. The front of the furnace is furnished with a cast-iron door, having throughout its entire length a movable shutter for regulating the access of air. The melted sulphur runs to the front of the furnace on account of the inclined bottom. The gas passes away from the back of the furnace at a temperature of 360° C. (680° F.), and the flow may be arrested by means of a damper capable of being raised or lowered down into a deep groove. The gas then passes through a cooler of 20 square metres surface, formed of lead pipes cooled by a flow of water. The temperature of the gas falls to 23–24° C. (74° F.). On leaving the cooler a pipe composed of an incorrodible alloy of antimony and lead, leads the gas to the top of the injector. The tube which conducts the gas is placed at the centre of the base of the cone, whilst the injection water is introduced at the side. The tube continuing down from the injector forms the barometric column which determines the pressure obtainable from the apparatus, in order to force the gas through a depth of liquid ; thus, a tube of 7 metres will afford sufficient pressure to overcome a depth of 4 metres in the sulphiting tanks. The end of this tube runs into a closed vat which is kept half full of water. Another tube from the bottom of the vat conducts the water back to the pump, and a tube from the top of the vat leads away the gas under pressure. It is said that the Porak system gives excellent results and produces a very pure acid.

Prangey and Grobert describe a process (French Patent 280898) for decolorising and purifying sugar solutions by means of what they term the phosphosulphites of the alkaline

earths, and earthy metals, which is based on the formation of tribasic phosphates and insoluble sulphites in the solution, as well as on the action of free sulphurous acid.

The phosphosulphites are prepared by dissolving the desired phosphate in anhydrous sulphurous acid, or in a solution of the same, or in a solution of a bisulphite. The solution may be formed either separately or in the liquid to be treated.

A liquid produced in this way has been used in the cane-sugar factories in Louisiana for some years past. It is sold under the name of Sulphos.

Lead Acetate.—Many years ago, Dr. Scoffern employed the subacetate of lead (sugar of lead) as a defecating agent, and many inventors have since improved upon his method of manipulation. This salt carries down all impurities as a precipitate, leaving sugar in solution, and any possible excess of the lead salt is thrown down as insoluble sulphite by the injection of sulphurous acid. Quantities of sugar were prepared by this process, without any injury resulting; but an outcry against the poisonous nature of lead acetate, and the dread that some might be accidentally left in the sugar, caused the process to be officially condemned. Lead certainly was present in the sugar, but it is not known whether it was in a poisonous form or not.

Newlanite.—The application of phosphoric acid as a defecant has been greatly facilitated by the introduction of Newlanite, manufactured by Boake, Roberts and Co., Stratford, E. It is prepared according to the patented process of B. E. R. Newlands by first manufacturing phosphoric acid of a very pure commercial quality and then mixing it with a porous silicious material for the purpose of facilitating transport. Although the preparation is dry to the touch, the whole of the phosphoric acid is present as free acid, and it is capable therefore of doing two or three times as much purification as other crude articles which have practically all their phosphoric acid in combination with lime and for

the most part therefore useless as a defecant. These superphosphates also contain an admixture of lime which causes trouble by forming incrustations during evaporation.

Ehrmannite.—The Bernard Ehrmann process was one first employed in Mauritius and was subsequently introduced into the West Indies by E. Packard and Co., of Ipswich. The advantages claimed for it are: Increased yield and improved quality of sugar, reduction in the proportion of molasses, economy effected, necessity for charcoal filters obviated, and recovery of the cost of the reagents in the value of the precipitate as manure for the next crop. Instructions for the use of Packard's Ehrmannite for the purification of cane-juice are as follows:—

Sulphurous acid, in the proportion of 1 lb. of SO_2 solution for 100 gallons of juice, is introduced into the juice, either in a gaseous state or in aqueous solution. After allowing a contact of at least 30 minutes, Packard's Ehrmannite is added in the proportion, at a minimum, of 1 lb. for 100 gallons of juice. After stirring the liquid, in order to have the acids perfectly mixed with the juice, lime is added in such a proportion as to allow a very slight acidity to persist in the juice, which is then heated and defecated as usual. The scums being much more bulky than by the ordinary processes, more care must be taken in order to separate them from the limpid juice. In Mauritius, the juice being heated to boiling point in the defecators, the scums divide into two parts, one of which rises at the surface of the liquid and is removed by means of scummers, whilst the other part sinks to the bottom and is separated by allowing the juice to run into large subsiders, where the solid particles remain and the limpid juice runs out. After passing through the subsiders, the juice is concentrated and crystallised as usual.

It is also practicable to use phosphoric acid after the defecation. In this case the juice, after being treated as above by sulphurous acid, is reduced to perfect neutrality by the

addition of a sufficient proportion of lime, and after heating and scumming, a proportion of Ehrmannite is added, so as to restore the juice to a slight degree of acidity.

Yellow Crystals.—The yellow crystals which are brought from Demerara and elsewhere owe much of their brilliant colour and transparency to particularly careful treatment at the defecating and clarifying stage, in other words, to the delicacy of the tempering. The temper used is lime-water rather than cream of lime, the density being only 10° B. instead of 17° B., and preference is given to rain-water over trench-water. The clarifier is filled with already sulphured juice. The latter is tested repeatedly while it is entering the clarifier, and while lime is being added, to ascertain the exact quantity of lime necessary to neutralise it. A few very careful trials are required before the correct proportion can be ascertained. When it is known, the whole quantity of lime is introduced in subsequent charges before the clarifier is one-quarter full.

The exact proportion of temper is decided primarily by the neutral reaction on test-paper, and secondarily by the appearance of the limed and thoroughly agitated juice when settled in a foot-glass. The filled foot-glass is placed in the light and where it will not be disturbed, and the contents are allowed to subside for 5 minutes. The appearance wished for in the cleared liquor is brilliant transparency combined with a golden colour. The right quantity of lime is that which will give this result, though the liquor may be a trifle alkaline to the test-paper. When the juice is inferior, colour must be sacrificed for transparency, and lime must be added till transparency is attained, even though the colour may be intensified to light red. The most careful and reliable man in the factory should be selected to count out the pints of lime-water into buckets ready for the clarifier. It is necessary to guard against too light a colour, which is sometimes compatible with good transparency in the case of superior juice, but will result in a

green-coloured sugar. Over-tempering causes the sugar to turn greyish-brown when cured. The treatment of the liquor in the vacuum-pan, or curing, is produced by the addition of sulphuric acid, which imparts the delicate yellow bloom so much admired in Demerara crystals, instead of the ordinary green-grey colour. If too little is mixed with the massecuite in the pan, the colour is scarcely improved, if too much, the sugar turns quite red a day or two after curing. It is admitted last of all; pan boilers should not be allowed to make a charge of syrup on to it immediately previous to striking. The quantity of acid to be used depends on the colour of the massecuite; as a rule, 3 gallons of acid diluted with 1½ gallon of cold condensed water to 5 tons of sugar is about right. In all cases, the least possible quantity should be used compatible with securing the desired result.

Bloomer.—This term is applied to a preparation of chloride of tin and hydrochloric acid, which is sometimes employed in colonial factories to give a yellow tint to crystal sugars, especially for Demerara crystals, or sugars resembling them.

The bloomer is added in the pan to the *masse-cuite* during the boiling, or in some cases it is used in the centrifugal machine. The bloomer is not in itself a colouring matter, but the results obtained by its use are due to its action upon the sugar, and are somewhat uncertain in their character.

Golden Bloom.—This is an organic colouring substance of a harmless character, and possessed of a high tinctorial power, which is used for the same purpose as bloomer. It is sold in the liquid condition, and after it has been diluted with water the sugar is sprinkled with it, and is then well mixed either by shovels or by passing through a revolving mixer. This colouring matter produces a beautiful golden yellow shade of any required intensity, and is largely employed by refiners, and also in the colonies, in the manufacture of yellow

crystals. The sole manufacturers are A. Boake, Roberts and Co., Stratford, London, E.

Filtration.—Filtration of the juice must be considered a useful adjunct to the defecation by heat and chemicals, its object being the removal of the matters rendered insoluble by these operations. Many kinds of filter and filtering medium are in use.

Formerly peat or brown coal or lignite was employed in the filtration of sugar liquors and F. Kleeman, Schoeningen, Germany, patented the use of them, and his process was tried by several refiners in this country, in Demerara and in the United States, but was eventually abandoned. The medium in the form of a fine powder was added to the raw sugar liquor in the blow-up, which was afterwards filtered through a filter-press, and the absorptive power of the lignite enabled it to retain the gummy matter and other mechanical impurities, and allowed the liquor to pass through the cloth of the press with improved clearness and diminished colour.

Other methods of filtration will be described in the Chapter on Refining.

CHAPTER V.

CONCENTRATION AND GRANULATION OF THE JUICE.

WHEN the cane-juice has been purified as far as possible by the aid of one or several of the processes described in the last chapter it has next to be deprived of such a proportion of its water as will permit the sugar to assume a solid (crystalline) and transportable form. This is the operation implied by the terms concentration and granulation, and may be effected by evaporation in open pans or in vacuum pans.

Open Pans Heated by Fire.—The earliest and crudest system of evaporation is the copper-wall or battery of open pans called teaches (taches, tayches, etc.), as shown in Fig. 58. The first two pans *a b* of the series are the clarifiers, which have already (p. 216) been described. Thence the juice flows into the teaches *c d e f*, which are simply sheet-copper pans set in masonry on a descending plane. Thus as the juice becomes concentrated, each lower pan is filled up with liquor from the one immediately above it, until the density of the liquor in the striking teach *f* is such as to permit granulation, when the thick crystallisable mass is ladled into shallow wooden vessels, and conveyed away to be "cured." By the oldest method, the liquor was ladled throughout the series. More recently an improvement was introduced, consisting of a copper pan or dipper, fitting inside the striking-teach *f*, and having at the bottom a large valve, opening upwards and worked by a lever. The dipper is attached to a crane, which commands the striking-teach and the gutter leading to the coolers. This greatly economises time. The furnace *g* for heating the series is set under the

striking-teach *f*; the heat passes by the flues *h* to the chimney *i*, or to the boiler flue. It is preferable to have the furnace-mouth at the end, instead of at the side as shown.

In working a battery, the only difficulty is to determine the exact moment when the boiling of the mass or sling in the striking-teach must cease, great skill and experience being required to decide the correct boiling time suitable for each kind of juice. The main point is to bring about crystal-

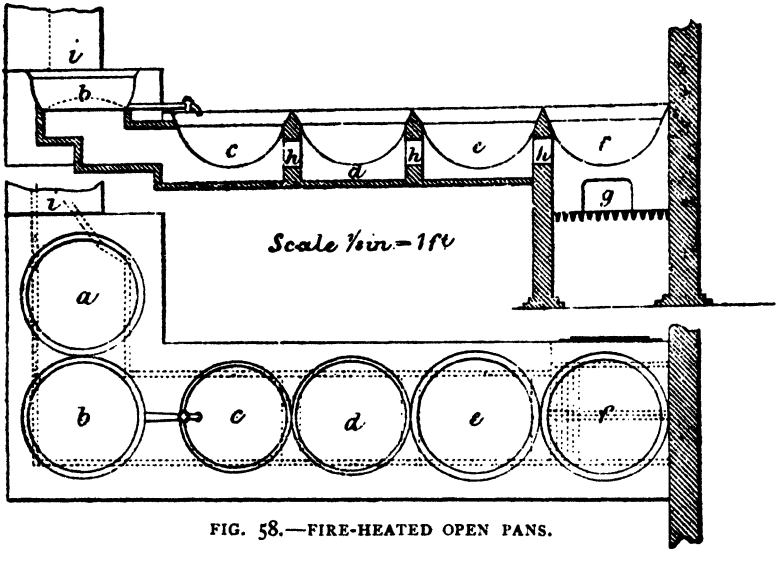

FIG. 58.—FIRE-HEATED OPEN PANS.

lisation in the sling in as great mass as possible after it cools; for if the sling be taken out of the teach too soon, there will be seen in it, after cooling, only a few large irregular crystals, and a quantity of sugar will be left in the molasses; on the other hand, if the sling has been allowed to boil too long, a sticky mass of very tiny crystals and syrup will result, from which the molasses cannot be drained off at all, or only with great difficulty, and from which it will be impossible to obtain clean, dry, and hard crystals. An experienced wall-man knows, from the appearance of the waves and bubbles, the approach of the striking point; but if a test is wanted, the

best perhaps is the following: Take a tin cup of the boiling sling, and pour a spoonful of it into a glass of clear water; if, after a minute's cooling, the sling can be formed into a ball which does not stick to the fingers, and which slightly flattens itself on the bottom of the glass by the mere weight of its descent on being dropped in, the correct period has arrived for striking.

The continued use of the copper-wall is an illustration of the extreme backwardness of the cane-sugar industry in many places. The process is very wasteful of fuel: its next drawback is the amount of labour required and the length of time occupied; thirdly, it is impossible to avoid considerable waste of liquor in the sloppy manipulation; and finally, the proportion of molasses produced is intensified by the churning up of the liquor and consequent admixture of air, and by the irregular and uncontrollable action of the heat upon the surface of the metal with which the liquor is in contact. The temperature prevailing in the striking-teach is not less than 110° to 113° C. (230° to 235° F.) in any part, and is necessarily much greater at the bottom of the boiling mass. It is therefore not surprising that the inverted (uncrystallisable) sugar which shows 10 per cent. in the first pan should be increased to 22 or 23 per cent. by the time the sugar leaves the striking-teach.

Pans Heated by Steam.—The simplest form of steam evaporating-pan is shown in plan in Fig. 59. It consists of a rectangular wrought-iron tank *a*, at the bottom of which is a series of copper steam-pipes *b*, connected by gun-metal bends brazed to them, and carried on wrought-iron supports *c*. The tank is fitted at the side with a steam-valve *d* at one end of the steam-pipe range; at the other side is a cast-iron box *e*, fitted with a wrought-iron pipe, for the escape of the condensed water to a condense-box. This form of evaporator presents a large heating surface, with facility for cleaning. By passing the ends of the steam-pipe range at *d e* through

stuffing-boxes, the pipes can be turned up, and all parts of the interior of the tank be readily cleaned, a matter of no small importance, if acidity and consequent excess of molasses are to be avoided.

Film Evaporators.—Under this head are particularly included those forms of evaporator which depend upon the principle of exposing thin films of liquid to the action of a heated surface in the open air. They are generically known as "wetzels" among planters, and comprise the pans bearing the names of Gadsden, Wetzel, Schroeder, and Bour, and

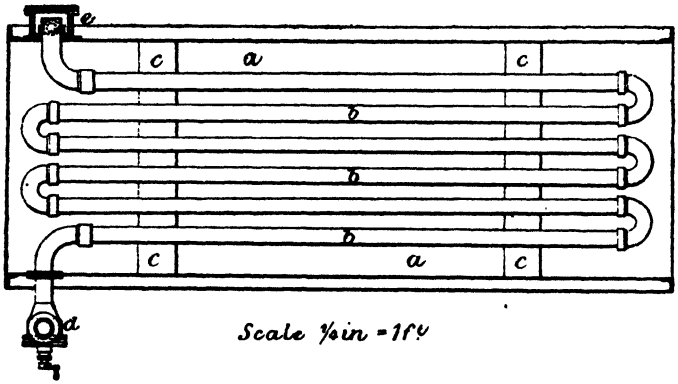

FIG. 59.—STEAM-HEATED PAN.

many other modifications, some of which, as Murdoch's, have steam-heated coils.

The original form of this class of evaporator was Aitchison's simple cylinder, revolving with partial immersion in the liquid, and heated internally by steam. In its revolution, the cylinder carries on its surface a film of liquid, the water of which is soon evaporated. The objection to this plan was the difficulty of adjusting the cylinder to suit the decreasing volume of liquor.

In the Gadsden pan, the cylinder is replaced by a sort of skeleton cylinder, consisting of two metallic discs at the ends connected by a series of metallic rods fixed at short intervals

around the periphery of each disc. Here the objections were the churning of the liquor, and the insufficiency of the heat derived from the steam-jacket of the pan.

Wetzel's improvement upon this was the substitution of steam-pipes for the solid rods. This overcame the deficiency of heat, and has been very generally adopted, though the churning is not reduced. Fig. 60 shows the Wetzel pan and its special engine, as made by Fawcett, Preston and Co., Liverpool. The pan *a* contains the liquor; the pipes *b* are heated by steam passing through them; and the whole cylinder *c* is caused to revolve by the engine *d*. The large heating surface enables steam at very low pressure to be used, exhaust steam from the cane-mill engine being sometimes utilised for the purpose. By fitting the pipes diagonally (instead of horizontally) between the discs, the churning is modified, but not altogether prevented.

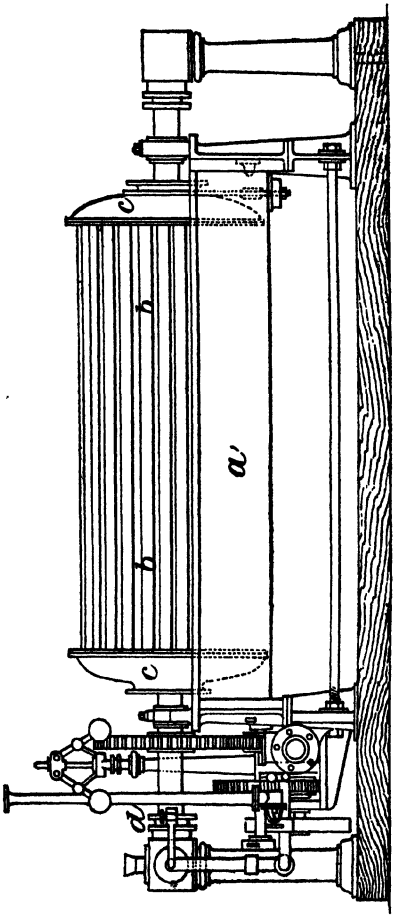

FIG. 60.—WETZEL'S PAN.

Schroeder aimed at overcoming the churning by having a jacketed pan fitted with a set of revolving solid metallic

discs strung upon a square shaft, and fixed at about 6 inches apart. The churning is thus avoided, and the apparatus has the additional advantage of cheapness, but the heat derived from the steam-jacket requires to be supplemented by a coil of steam pipe winding between the discs.

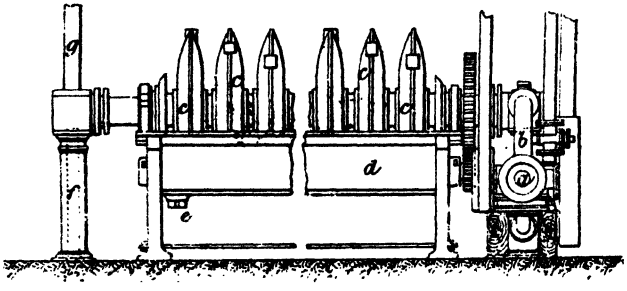

FIG. 61.—BOUR'S PAN.

Bour observed that larger grains of sugar were produced on the discs in Wetzel's pan than on the pipes, and hence concluded that a series of hollow steam-heated discs would increase the evaporating surface, and produce better grain. A front elevation of his pan is shown in Fig. 61; and vertical and transverse sections of the disc on an enlarged scale in Fig. 62; *a*, is the steam-engine; *b*, the exhaust-pipe used to heat the revolver; *c*, the revolver, consisting of 10 copper discs; *d*, a copper pan holding the liquor under treatment, and which is discharged by the valve *e* at bottom; *f*, a pipe for carrying off the condensed water from pan; *g*, pipe for carrying off air and uncondensed steam; *h*, safety-valve. Thus the pan consists of 10 hollow discs of copper, mounted on an

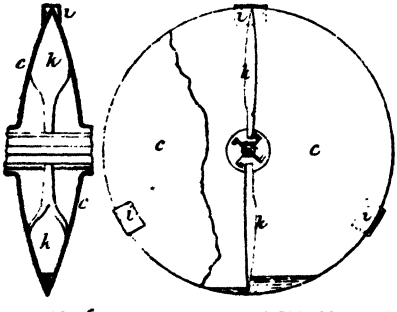

FIG. 62.—SECTIONS OF DISC OF BOUR'S PAN.

axis of a form which allows the steam to communicate freely with all the discs, and, at the same time, collects the water resulting from the condensation, and carries it off at one end. In the inside of each disc, are 2 spoons *k*, running from the extreme diameter of the disc, and terminating in the axis into which the water is delivered. On the outside of the discs *c*, are a number of small buckets *i*, which lift the liquor as the discs move round, and being open at the sides, allow it to spread itself as a thin film over the surface which is not immersed. The speed of the revolver may be 10 to 20 revolutions per minute. Where steam is plentiful, equally good sugar is produced by the quick speed, and nearly double the

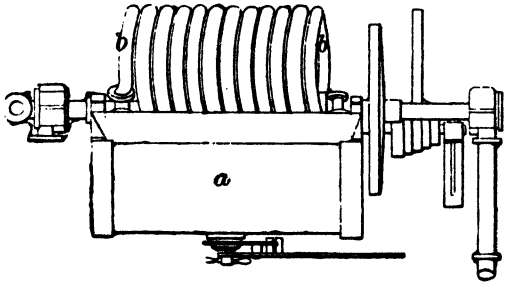

FIG. 63.—PONTIFEX'S PAN.

work is performed in the same time. On an estate in Penang one of these pans has cooked 12 cwt. of sugar per hour, from 20° B., as taken from the battery, the temperature never exceeding 77° C. (170° F.). The safety-valve blows off at 2 lb. per square inch; this prevents bursting from over-pressure. This apparatus would be improved by the removal of the distributing cups *i*, which churn the liquor excessively.

Another modification is that invented by Pontifex, and shown in Fig. 63. The pan *a* contains the liquor to be evaporated, within which revolves a coil of steam-pipe *b*. Thus a large heating surface is obtained, without the drawback of churning up the liquor.

It is to be observed that all these forms of film evaporator

are destined only to finish the concentration begun in the battery. The liquor is brought to them at a density of 26° to 27° B.

Fryer's Concretor.—In principle, Fryer's concretor differs essentially from all preceding systems, inasmuch as no attempt is made to produce a crystalline article, but only to evaporate the liquor to such a point that when cold it will assume a solid or concrete state. The mass is removed as fast as formed, and being plastic while warm it can be cast into blocks of any convenient shape and size, hardening as it cools. In this state, it can be shipped in bags or matting wrappers, suffering neither deliquescence nor drainage. The cost of an apparatus capable of making 10 cwt. per hour is about 1000*l.* It is the invention of Alfred Fryer, and is made by Manlove, Alliott and Co., Nottingham and Rouen.

The most recent and improved form of the concretor is shown in side elevation and plan in Figs. 64 and 65. It consists of a series of shallow trays A, placed end to end, and divided transversely by ribs running almost from side to side. At one end of these trays is a furnace B, the flue of which runs beneath them ; and at the other end, are a boiler C and an air heater D, which utilise the waste heat from the flue, employing it both to generate steam and to heat air for the revolving cylinder.

The whole series of trays A is placed on a slight incline, the upper end being next the furnace. The topmost three trays are made of wrought iron, since the intense heat here would render cast iron liable to fracture. The clarified juice from the pipe M flows first upon the tray nearest the furnace ; it cannot run straight down the incline towards the air heater D, because of the transverse ribs already alluded to, which oblige it to meander from side to side of the tray in a shallow stream. Thus it has to traverse a channel some 400 feet long, before it can leave the trays at the end adjacent to the air-

heater, although the distance between the furnace and the air-heater in a direct line is not quite 50 feet. While flowing over these trays, the juice is kept rapidly boiling by means of the heat from the furnace ; and although it only takes some

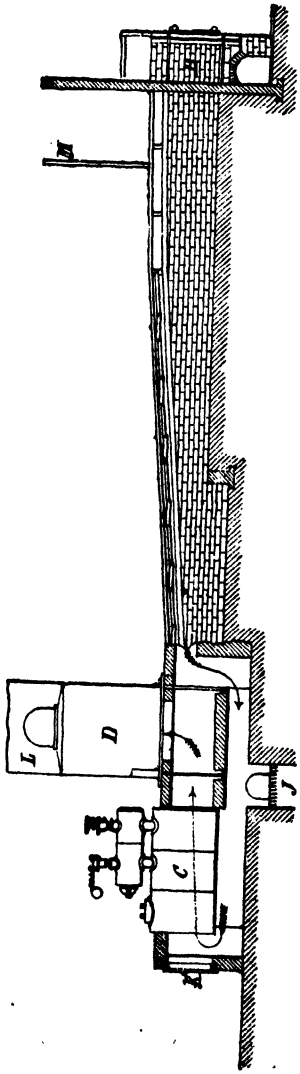

FIG. 64. DE ELEVATION OF CONCRETO

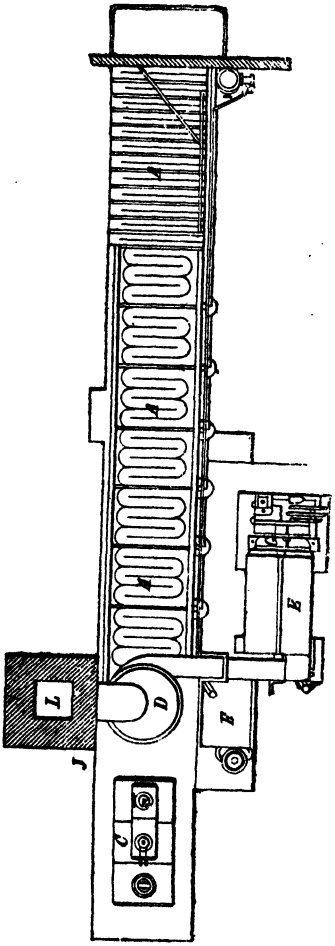

FIG. 65.—PLAN OF FRYER'S CONCRETOR.

8 to 10 minutes to traverse, its density is, during this short time, raised from about 10° B. to about 30° B.

From the trays, the thickened syrup flows into the tank F, and thence passes out into the revolving cylinder E. The cylinder is full of scroll-shaped plates of iron, over both sides of which the thickened syrup flows as the cylinder revolves, and thus exposes a very large surface to the action of hot air, which is drawn through it by means of a fan G. Motion is given to the whole apparatus by means of a small engine H. In this cylinder, the syrup remains for about 20 minutes, and at the end of that time, flows from it at a temperature of about 91° to 94° C. (195° to 200° F.), and of such a consistence that it sets quite hard on cooling.

By the use of dampers, the hot gases from the flue may be directed either under the boiler, returning through it to the heater, or direct to the heater. At J, is an auxiliary furnace for raising steam, when the heat from the concretor flue is insufficient or not forthcoming—as, for instance, when beginning to crush canes, and before the juice has covered the trays. K is a smoke-door for cleaning out the boiler-tubes. L is a chimney, either of brick or iron, for the last escape of the gases.

The following analyses of concrete made in Viegues, Spanish West Indies, show that it is not equal to that made in Jamaica and British Honduras, which contains as much as 95 per cent. of crystallisable sugar and only 1·56 per cent. of water :—

Crystallisable sugar ..	82·00	85·60	82·50	74·85	80·40
Uncrystallisable sugar ..	7·14	4·44	8·85	10·20	8·02
Water	5·12	4·63	3·72	8·50	5·60
Ash	1·88	1·62	2·19	2·61	1·49
Unknown matter	3·86	3·71	2·74	3·84	4·49

Vacuum Pans.—The difficulty of boiling dense liquids is too well known to require more than passing mention. The

cause of this difficulty is the lessened ability of the vaporised water to overcome the pressure of the atmosphere, normally amounting to about 15 lb. per square inch. By relieving the liquid of this pressure, the boiling can be effected at far lower temperatures, thus lessening the danger of burning the liquor. To apply these principles to the concentration of sugar syrups, the various forms of vacuum-pan have been introduced.

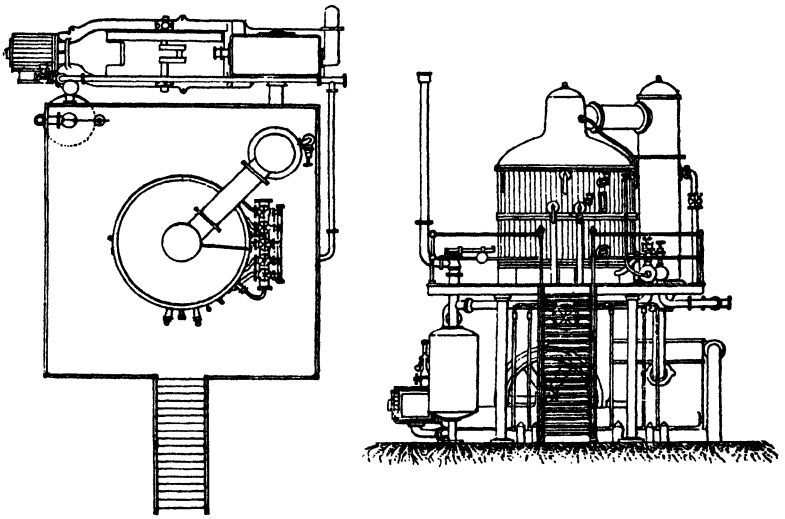

FIG. 66.—MANLOVE'S VERTICAL VACUUM PAN.

Fig. 66 shows an arrangement of a vertical cylindrical vacuum pan and pumping engine, by Manlove, Alliott and Co., Nottingham.

The pan is of cast iron, with dome cover and conical bottom, having a sharp fall towards the outlet. The heating surface consists of five solid-drawn seamless copper coils, with brass inlet and outlet pipes, stayed to the sides and top of the pan with brass clips and rods. Each coil is supplied with steam by either of two valves—one for low-pressure steam, and the other for high-pressure steam from the boilers. On

the top of the pan is fitted a capital with manhole and cover, and a large vapour pipe which leads to a save-all where any watery particles carried over by the vapour are intercepted, and may be returned to the pan or withdrawn as desired. From the save-all the vapour passes downwards into a condenser of extra large capacity, supported from a staging, and fitted with a large injection pipe with valve and perforated copper spray pipe, which can be readily removed or examined by opening a special hand-hole cover. The condenser is connected by means of a conical outlet pipe to the pumping engine. The pan is fitted with two charging cocks for different qualities of syrups or molasses, proof-stick, test-cock, large oblong sight-glasses with wash-cups, steaming cock for cleaning the pan, barometer, thermometer, and air-cock ; and is lagged with mahogany, felt, and brass bands. At the bottom of the pan a large outlet sluice-valve is provided, especially arranged to prevent the *masse-cuite* from adhering to the working surface, and arranged for luting with molasses. This valve is worked by a hand-wheel and screw carried from the under side of the staging. The whole is supported on a wrought-iron stage with hand railing, iron staircase and strong cast-iron columns. A steam receiver is provided to collect the exhaust steam from the vacuum pump and other engines in the factory for the supply of the coils, and it is furnished with an escape-valve, pressure-gauge and steam trap. Condensation water is withdrawn by means of a separate steam-trap from each pan coil. The vacuum pumping engine is of unusually large capacity, to insure the maintenance of a very high vacuum and consequent efficiency of the pan. This vacuum pumping engine has been specially designed to avoid several of the disadvantages inherent in some of the well-known types of these engines ; the heavy fly-wheel is entirely carried between the bearings and the pump ram, and the steam piston is directly connected without the intervention of link-work ; the whole pump occupies much less valuable

floor space than is usual, and all the parts are readily accessible for repairs, and are easily understood by any mechanic. The pump proper is of the floating ram displacement type, with suction and delivery valves of very large area, and is so arranged that all the valves, gun-metal grids

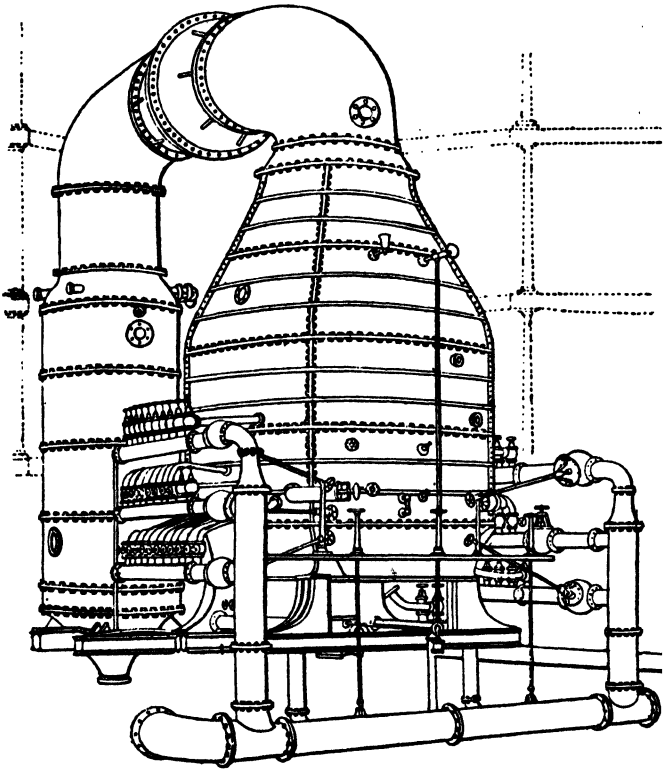

FIG. 67.—DEELEY'S VACUUM-PAN.

and guards, can be quickly withdrawn, examined, and replaced.

Fig. 67 shows probably the largest vacuum pan ever built, constructed by Robert Deeley and Co., New York, for the California Sugar Refinery, San Francisco. The body of the pan is of iron 1½ inches thick, there being four perpendicular

sections, two dome-like sections at the top, and one bottom section, all accurately and carefully fitted and bolted together. The inside diameter is 17 feet, the height being 31 feet 7 inches, and the height to top of overflow 42 feet 6 inches. The capacity of this pan is about 1000 barrels, or over 100 tons of sugar at each strike, the time required to make a strike, or sufficiently exhaust the water from the juice before treatment by the centrifugal, being under ordinary conditions three hours.

The principle on which a vacuum pan is based, is the fact that the boiling point of water, syrup, or any liquid, is in part dependent upon the pressure of the atmosphere, the temperature at which the liquid boils being higher or lower according as the atmospheric pressure is increased or diminished. In practice with these pans, the liquor is boiled at a temperature of 110° to 120° F., so there is no danger of burning the sugar, the inversion of sugar is reduced to a minimum, and the rapidity of the operation is greatly increased. A pan of this size must necessarily be of great strength, in order to resist the effect of the atmospheric pressure, which increases according as the vacuum is more perfect.

The arrangements for heating will be readily understood by reference to this illustration, the copper coils for this purpose presenting a surface of over 3000 square feet. There are eight of these separate coils, five being of 4-inch diameter, and three of 5-inch diameter, affording 69 inlets and outlets, and connected with eight steam trunks, two of 8-inch and six of 12-inch diameter, the steam being supplied by a 30-inch main. Every facility is given for easy working, all the main valve-stems being carried to convenient positions on the working platform, from which also the strike, or discharge valve at the bottom of the pan, is operated. This valve is 20-inch diameter.

The pan is charged through two 6-inch valves, controlled on the working platform, the atmospheric pressure readily forc-

ing the liquor in. The cane-juice with which the pan is charged, usually gauges 25° to 30° Baumé, and when discharged it is about the consistence of thick mortar. It is intended, in operation, that this pan will be filled with liquor only to a depth of 18 feet, leaving 8 feet vapour space above within the pan itself, besides the room allowed in the great pipe leading from the top. There is a spray catcher or save-all in the dome of the pan, and the vapour pipe leading up from its top is 6 feet in diameter. Situated in this vapour pipe, between pan and condenser, is a portion enlarged to 10 feet diameter, forming a trap to catch any overflow, which can be returned to pan or tanks as desired, and thence the 6-feet vapour pipes continue to the condenser, which is 8 feet in diameter and 28 feet high. The condenser has two 8-inch perforated injection pipes and four scattering plates. The pumps which make and maintain the vacuum are connected with the condenser, forming what is termed a "dry" vacuum.

The pan has two of what are styled lock proof-sticks, for removing and testing from time to time a small quantity of the syrup. There are also eight sight-glasses arranged in different positions to enable the operator to keep a constant watch on the work going on inside the pan. A barometer and thermometer are also connected with the interior of the pan, by which the extent of the vacuum and the temperature of the contents are indicated at a glance. Formerly vacuum pans were built almost exclusively of copper, but cast and wrought iron pans are now often employed, only the heating coils being of copper, the coils being so fixed as to prevent their vibrating during the boiling, and allowing for expansion and contraction without strain.

Besides the amount of fuel saved and the economy of conducting the sugar manufacture with a pan of such device as this, where the work can all be so easily overlooked and the process minutely regulated, probably the greatest advantage of all lies in the largely increased proportion of sugar thus

gained, and the comparatively small quantity of molasses which each strike affords. By such improved pans the yield of sugar amounts to six or eight hogsheads to one of molasses, while by less improved means only two or three hogsheads of sugar are obtained to one of molasses.

The proof-stick (Fig. 68) is simply a brass or gun-metal tube, which is driven from the upper part of the side of the vacuum-pan down an aperture made of the same size as the

FIG. 68.—PROOF-STICK.

rod. When it reaches the bottom, the tube is twisted half round by the cross handle, and opens a communication between the end of the tube and the syrup. In the end of the tube is a groove into which the syrup enters; the handle is half turned again, the tube is drawn out, and the entrance is closed as before. The liquor can thus be examined without destroying the vacuum in the pan.

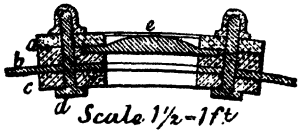

FIG. 69.—SIGHT-GLASS.

The detail of the sight-glass is shown in Fig. 69: *a*, gun-metal rings; *b*, vacuum-pan; *c*, leaden ring; *d*, ⅝-inch bolt; *e*, glass plate.

Fig. 70 shows a side-view, and plan underneath, of a slide. It consists of a gun-metal cup and slide *a*, and wrought-iron lever bar *b*, fitted with bearings, and of the form and figured dimensions shown.

Figs. 71 and 72 illustrate vacuum-pans as used on nearly all large sugar estates. Fig. 71 shows a section and plan of a vacuum-pan erected in Cuba, made of copper, and with 2 breasts instead of 1, so as to give large capacity, to enable the planter to concentrate and finish to grain one day's work if he chooses, by slowly concentrating and

building up the grain during 10 or 12 hours; in this way is produced a strong brilliant grocery sugar of large grain, giving in the centrifugals from 66 to 70 per cent. of marketable sugar from the *masse-cuite.* The vacuum-pan is shown at A; B is a save-all, E is the charging valve, and on the opposite side are seen the steam valves for charging the different worms, and for regulating the heat inside when molasses alone is being boiled.

Fig. 72 shows an elevation and plan of a cast-iron vacuum-pan. The dome A is conical in shape and covered with cement. The save-all B is attached in the usual manner;

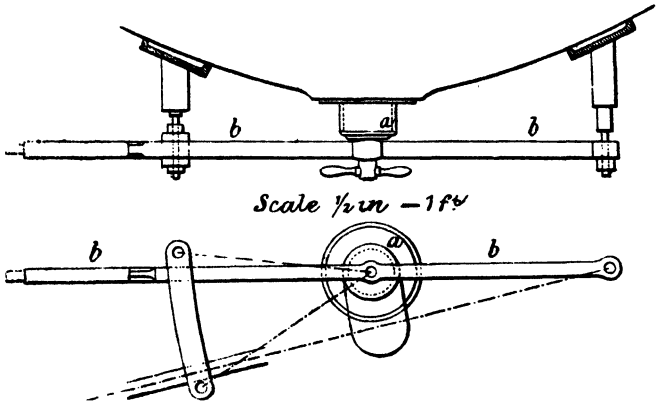

FIG. 70.—VACUUM-PAN SLIDE.

E is the charging pipe, C the discharge valve, and D the boxes for the condensed water, to prevent the emission of live steam from the worms of the pan.

Formerly the syrup was boiled in the vacuum-pans simply until it reached such a point of concentration as to crystallise freely in coolers. This operation used to take about 3 to 3½ hours; but it has been found more profitable to elaborate the grain in the pan before discharging the *masse-cuite,* and a charge may now take from 5 to 10 hours to finish: hence very large pans are required to hold one large charge of *masse-cuite* instead of several smaller charges. The grain

formed from syrups boiled *in vacuo* is larger and more solid than that from syrups simply concentrated to crystallising-point in open batteries. A Cuban hogshead will contain only 1600 lb. of sugar made in the copper-wall, but 1800 lb. of vacuum-pan sugar. By the use of the vacuum-pan also, the

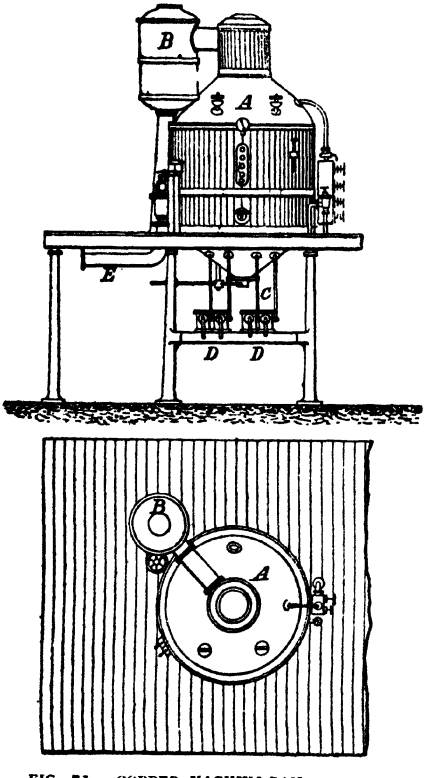

FIG. 71.—COPPER VACUUM-PAN.

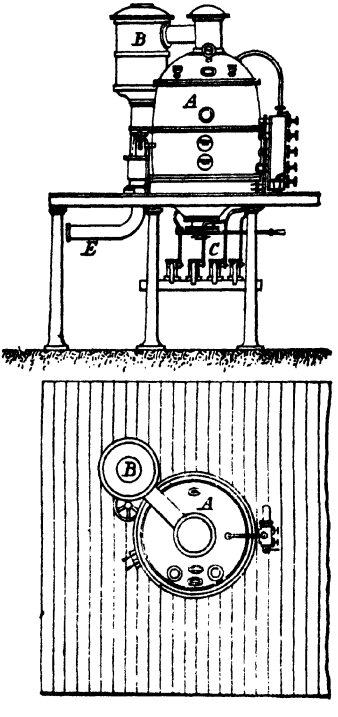

FIG. 72.—CAST-IRON VACUUM-PAN.

planter is enabled to boil his molasses, and to extract from 1 gallon some 4 to 5 lb. of sugar, still leaving a second molasses for the rum distillery.

Surface Condensation.—In situations where there is not sufficient water to admit of condensation by injection being

used, surface condensation is employed to maintain a vacuum in the pan. For this purpose, Pontifex and Wood devised condensers, which consist of one or more series of iron or copper pipes, fixed to boxes at each end, with partitions to direct the current of the vapour. Above each series of pipes is fixed a trough, always kept full of water, and so constructed that the water trickles in a gentle shower uniformly spread over the pipes, so as to keep them well covered with a thin film. The lowest pipe is connected with a small pump worked by the engine, which draws the condensed vapour, and any air that may have collected, from the pan. The improvement consists in doing away with solder joints at the junction of the pipes with the case, the solder being liable to crack from the unequal expansion of the pipes (owing to the lower pipes being cooler than the upper ones), and the substitution of an elastic joint, which allows for the irregularity of the expansions without injuring the vacuum. They are also easily replaced, and take up less space for shipment. The superior economy of water in these condensers is owing to the condensing water being evaporated, and carrying away not merely sensible but latent heat. The ordinary method of condensation is similar to that employed in the condensers of steam engines, when the steam is led into a vessel where it is brought into contact with a stream of cold water. In this case, as the condensing water must not be allowed to become vaporised, all the heat it absorbs must be in the form of sensible heat, and it is said practically to require about 30 times the quantity of condensing water. But in these surface condensers, the vapour which passes off from the surface of the pipes not only carries off the sensible heat, but also renders latent a great amount of heat in its conversion into vapour, the quantity of water passing off from the surface being equal, or nearly so, to the quantity condensed inside the pipes. The water which falls into the trough under the condenser is used over again, the heat of it not materially affecting the action of the condensers.

Entrainment.—In the French Patent 292068, G. Hommerin describes an apparatus for the recovery of sugar entrained during evaporation, in which a cylindrical vessel, containing a series of concentric cylinders formed of wire gauze, perforated metal, or of any convenient material, is interposed between the evaporating vessel and the air-pump.

The vapour enters at the bottom of the cylinder, the pipe being carried a short distance upwards. A cap is placed over this vapour pipe, having its sides turned in so as to form a gutter from which two iron pipes fall to the bottom of the apparatus. The vapour passes from under this cap successively through the perforated concentric cylinders, finally making exit by a pipe in the side of the apparatus leading to the air-pump. The partitions are made of non-perforated metal on the exit side so as to cause the vapour to pass through the gauze.

Working the Vacuum-Pan.—The method of using the vacuum-pan is generally as follows:—

The air-pump is started, and as soon as the vacuum reaches 26 or 27 inches, the feed-cock on the side of the pan is opened, and sufficient liquor is drawn in to completely cover the first coil; steam is next turned on, and the liquor rapidly concentrates; fresh supplies are admitted at short intervals, the feed-cock being opened say for 15 seconds at a time, until the mass commences to show grain. The grain is fed carefully, the cock being opened frequently, and each time the quantity admitted is increased. As the amount of sugar in the pan continues to augment, steam is turned into the 2nd and 3rd coils, until, at the completion of the charge, the pan is nearly full, or just below the sight-glass. In this way, the grain grows in size. On the conclusion of the boiling, the vacuum is destroyed, and the charge is run out into a tank, and allowed to stand or slowly stirred for an hour or two, when a further crystallisation takes place.

It is customary to draw in as much syrup as will cover the bottom coil (when reduced by concentration), called "graining low down." Some prefer to grain higher; some when the pan is half-full. An objection to graining high is that the grain has not so much time to grow, but it does not always hold good. A pan taking 7 hours to boil a strike of 8 tons of *masse-cuite* grained low, will only take 6 hours if grained higher. The crystals in the second case will not be so large, but, in an 8-ton pan, they will be of fair size, even by the quicker method. The drawing-in is conducted thus: The charging-cock is opened, and shut off again as soon as the liquid boils up to the "bull's-eye" on the opposite side. The contents quickly boil down; the cock is opened again, and shut off as before when the liquor boils to the same height. This is kept on until the syrup intended to form grain has been taken in: roughly speaking, 2000 gallons of good 18°- to 20°-B. syrup to a 5-ton pan is about the correct amount.

The granulating-point is easily recognised by a practical pan-boiler: a proof of the syrup, taken between the thumb and finger, should draw to a thread ¾-inch long; but this test is of no value if the syrup is sticky, resulting from under-tempering or sour canes.

In boiling for large grain, it is essential to grain low. The grain commences to form in minute specks; these rapidly increase in number and size, until the whole mass of liquor is filled with them. As each lot of syrup is admitted, it deposits on the grains already formed, causing these to grow larger. During granulation, the temperature should never be more than 71° to 78° C. (160° to 172° F.), though raised later on to harden the crystals; but this must not be done too soon after graining, or the crystals will melt.

Rules for graining syrup in the vacuum-pan are: the thinner the syrup admitted, the bigger will the crystals be; for large-grain sugar, few and heavy charges must be admitted, so as to give the grain time to grow; the larger the crystals

are required, the more quietly and slowly must the boiling be carried on; to make regular grain, granulation is brought about very slowly, and on no account must the grain be forced by boiling very high before the first charge.

It is important in pan-boiling to avoid forming "false grain." The two stages when the danger of it is greatest are (1) The time when the sulphuric acid (for producing yellow crystals) is admitted into the pan; (2) the "opening" of the sugar when restarting the pan to "double," i.e. when, having struck out half the contents of the pan, fresh portions of syrup are admitted on to the *masse-cuite* left in the pan. If the contents are not sufficiently high when sulphuric acid is admitted, false grain forms whilst working up for striking. Unless the *masse-cuite* be "opened" very slowly, the new lot of syrup, instead of depositing on the already-formed crystals and increasing their size, will form an independent grain, called "false grain," which not only spoils the sugar, but prevents the molasses leaving it in the centrifugals.

When false grain is very bad, the best course is to strike it out immediately, and spin it in the centrifugals, mixing it with warm water if absolutely necessary. When not very bad, and the pan is little more than half-full, the heat and washing of a few heavy charges of new syrup will remove it.

The proper striking-point is of great importance, and arrives when the proof will scarcely run out of the socket of the proof-stick. Massecuite on leaving the pan should have a light-red colour tinged with gold, and a temperature of 66° C. (150° F.)—never higher. The objects of doubling are to increase the size of the grain, so that the market value of the sugar may be enhanced, and to save time. Some syrup makes sugar that will bear doubling 2 to 5 times; while some gets sticky after the first cut of the pan. Great care must be taken while opening the massecuite left in the pans; for the third or fourth cuts, a temperature of 74° C. (165° F.) may be

maintained while opening slowly and carefully, the operation requiring 15 to 25 minutes. The drawing-in of syrup demands more care in subsequent cuts than in the first.

Great loss of sugar is caused by doubling, depending on the amount of acid used, and on the quality of the syrup; it is estimated to amount to 20 to 25 per cent. of the sugar, and some hold that a better return is obtained from the larger quantity of dark sugar at a lower price; but on the other hand the "loss" means sugar converted into a high-class "golden syrup," and the extra market-value of the yellow crystals is affirmed by some of the best authorities to more than atone for the extra cost and increased inversion of crystallisable sugar.

When sour canes are sent to the buildings, the sugar is apt to get sticky in the pan, and occasionally to such a degree as to interfere with the formation of grain, and endanger the whole strike of sugar. If the stickiness is not very bad, 2 to 3 buckets of strong lime-water, taken into the pan through the acid-cock, will put things straight. Besides this, the excess of acidity should be neutralised by lime-water, leaving the syrup only slightly acid before drawing into the pan.

Molasses.—"First molasses" runs from massecuite which has had no molasses boiled in it; "second molasses" drains from massecuite boiled with molasses in it; "third molasses" drains from vacuum-pan molasses-sugar (not muscovado sugar). These are kept distinct. Third molasses is so sticky and impure that it is sent to the rum distillery (see Chapter on Rum), as is also sometimes the case with second molasses, when low quotations do not pay to convert it into sugar. Only first molasses should be used for mixing with syrup-sugar in the pan, and second molasses for boiling molasses-sugar ("third sugar"); second molasses should never be used for boiling with pure syrup-sugar in lieu of first molasses. There is a great difference of opinion about the boiling of molasses; but the plan now to be described is the best, provided

arrangements permit the molasses to be boiled within 1 to 2 hours of separation in the centrifugals.

Supposing that the pan has struck out 3 tons, being refilled and cut a second time, leaving it still half-full, for a third time fresh molasses tempered with lime-water, and reduced with water to 30° B., is drawn in. The contents, struck out and spun in the centrifugal, should yield 2½ to 3 tons of second sugar, i.e. syrup-sugar with which molasses has been boiled giving about 1·2 ton of sugar from molasses, much improved in colour, in addition to the 2 tons obtained from the syrup, and upon which the molasses was admitted. To make a very pale sugar, this process will not answer, and the molasses must be made into fine quality third sugar, or into rum.

For tempering molasses, lime-water should be stirred in until most of the acidity is destroyed, and only a faintly acid reaction is shown on litmus-paper. For second and third syrups, or molasses which is to be boiled for grain, the density must be reduced to 30° B., either by blowing in live steam, or, if this be inadmissible, by the addition of condensed water. The boiling is performed in an exactly similar way to first syrup, except that it is useless to try for large grain, as the impurities effectually prevent the grain from increasing beyond a certain size. It is not an unusual custom to considerably raise the temperature before striking, by dropping the vacuum 2 to 3 inches; this is readily done by checking the supply of water to the condenser, and keeping the steam full on the coils and jacket. The temperature of the massecuite is then about 77° C. (170° F.), whereas it has previously been about 68° to 74° C. (155° to 165° F.). The object of this is to harden the grain, in order that it may be washed in the centrifugal. The massecuite from second and third syrups should always be allowed to stand 2 to 3 days in coolers, to grow the crystals before drying in the centrifugals. Molasses from third sugar of about 34° to 36° B., is always "jellied" or

"boiled smooth," and it is not then necessary to reduce the density. If very acid, it should be nearly neutralised, and boiled until a proof will draw out in a thread 1 to 1½ inch long between the finger and thumb. At this stage, and before any sign of granulation has commenced, the contents of the pan are discharged into a cooler, and allowed to stand for 1 to 2 weeks, until the sugar has properly granulated, before drying in the centrifugals.

Construction of the Vacuum-Pan.—Mr. S. G. Chiquelin, in a paper read before the Louisiana Sugar Planters' Association in May 1900, examines the conditions to be satisfied in the construction of a vacuum pan, in the designing of which conflicting conditions must be considered. The shallower the pan, or rather the less the depth of liquor in it, the lower the average temperature of the boiling liquid; but the cost is then greater in proportion to size, and there is greater difficulty in discharging the finished massecuite. A shallow pan is also undesirable for making large crystals. The most essential elements in regard to its working are, in the first place, a good circulation of the liquor, in order to make a sugar with crystals of uniform size, and in the second, economy of steam. The circulation depends entirely on the setting of the coils. The lowest or bottom coil being the most important one, its setting should be most carefully looked into. It should enter the pan at a point which would represent about one-sixth the capacity of the pan, and should be spiral in shape, of course hugging the sides within a few inches, but at no point touching them; the tail end coming out at a point somewhere about the discharge valve. There should be enough spirals in the coil to give the required heating surface and at the same time to prevent the sugar from depositing on the bottom of the pan. The steam-jacketed bottom is strongly adhered to in Europe for the simple reason that it prevents the deposition of sugar on the bottom of the pan, and also helps to maintain the circulation. If, however, the bottom coil is set as

stated, these difficulties can be overcome and the expense of the extra bottom be saved. The other coils should be so arranged as to help to maintain the circulation, especially when the pan is full or nearly so. However, the arrangement of these coils should be a little different from the bottom one, not having as much heating surface near the sides, and instead of having them of the shape of the pan, have them somewhat resembling the letter V. The circulation would then be up the sides and down the centre. There should be a sufficient number of these copper coils of a size to do the work most efficiently.

The working of the vacuum pan depends largely on the condenser as to its efficiency. Almost invariably the vapour pipe of the vacuum pan enters the condenser within a few inches from the top, and the vacuum pump is attached to the bottom, when really they should be reversed. One of the best authorities on the construction of sugar house machinery, Horsin Déon, strongly condemns this system, for various reasons; in the first place the injection water and the vapour do not mix so readily when both are travelling in the same direction, and in the second place, there are many incondensable gases coming continuously from the boiling massecuite, which not only accumulate in the top of the condenser and prevent, to some extent, the condensation of the vapour, but attack the metal of the condenser, as in the multiple effects, though not so seriously. Now, in the other system, the vapour entering the condenser from or near the bottom, having already the tendency, as is well known, to rise, and furthermore aided by a powerful pump which is drawing the vapour to the top and at the same time removing these incondensable gases, together with the injection water dashing from one shelf to the other in a zigzag way, the reason is at once obvious why this system of condensation is more nearly perfect and more economical than the other.

With regard to the various forms of pans, Mr. F. W. Wolf,

in the "Louisiana Planter" states that the main difference in their construction consists in the heating device, in the older ones copper coils being used, while the new inventions replace these by a pipe system. The question which of these is the more efficient seems to be still an open one. It has been shown in European factories, for instance, that the same amount of massecuite was boiled in the older cone-shaped coil vacuums, of about 5 metres diameter, in two hours less than in those of the newer construction with a smaller diameter. On the other hand, it is claimed that the quality of a strike is not improved by quick boiling. A vacuum boiling quickly is desirable, but quick boiling in itself is bad, and for the following reasons: while it is possible to force the crystallisation of the thick juice in the pan, the sugar crystals thus produced cannot be forced to combine with the crystal previously obtained as this latter process requires time. If sufficient time is not allowed, then the conditions for satisfactory crystallisation of the juice are lacking, and the result will show itself in the smaller quantity of first product obtained. It would, therefore, seem advisable not to try and hasten the boiling. The aim of inventors of new apparatus has been to produce a pan with as large heating surface as possible, while limiting the time of boiling. To the latter class of vacuums used now in many continental factories, belongs the one invented by Röhrig and König. It is constructed similar to an upright syrup tank, but with a conical wrought-iron double bottom, and has a circulation pipe in the middle of the steam chamber, provided with an agitator. Besides these are two arms, close to the double bottom for the purpose of evenly distributing the thick juice. The pipes are thus arranged so as to secure a large heating surface, which can be laid quite deep. As a consequence, the boiling with steam of low tension (0·1 to 0·3 atm.) is possible, and on account of the deep level of the heating surface, the formation of the grain can commence with a relatively small quantity of juice (say ¼ of the contents of the pan)

an achievement not reached by the usual construction. The boiling is much simpler than with coil vacuums, it is claimed, and the grain obtained is very even and large. German factories report having obtained with this vacuum, 81 per cent. sugar from first massecuite, with a rendement of 91. The heating pipes are made of brass or steel. The double bottom is wrought from one piece.

In the Greiner vacuum pan the coils were so arranged that the massecuite would always be carried downwards through an inner slot. This slot, however, was found incapable of carrying the heavy moving mass downwards. In the newer apparatus the outer pipes are so arranged that they can be cut off at will or only slightly heated so that only the heating tubes near the axis of the vessel produce the evaporation and ascent of the syrup in the middle and its descent towards the sides. The outer heating tubes are only put into operation towards the end of the boiling. It is claimed for this vacuum that the appearance of irregular grain during the boiling in the vacuum due to the lack of systematic circulation is done away with. A further improvement consists in an adjustable conical cap to the end of the feed pipe so arranged that the annular inlet space may be lessened in order that small charges enter at the same speed as greater ones, thus insuring thorough mixing with the massecuite.

The Express Vacuum Pan described by Mr. G. Stade in the "International Sugar Journal," March 1903, consists of one or more heating systems which are arranged in the following manner. The cast-iron, wrought-iron, or yellow-metal calandria consists of conical parallel plates which are fixed like a double funnel and contain a large central circulation pipe inside and a cylindrical ring outside. The heating tubes are fixed at such an angle that their central lines form a kind of parallel or central radiatiform. The steam enters at the upper part of the calandria, the condensed water escapes at the lowest point, while for air and gas separate pipes are arranged

to insure the highest efficiency for the system. The tubes are short and wide. They deliver even the most concentrated massecuites up to 5 per cent. of water to the top. The tubes being set inclined, the masses have to go out sideways and are forced to circulate sideways in or outside of the system, dependent on the arrangement of which several varieties can be installed. The movement in the pan is very even, but strong, so that all the grains are kept equally in contact with fresh mother-liquor, causing a perfect completion of the crystallisation process. One of the chief points for practical engineers is the easy access to all parts of the system. The tubes can be reached from outside and inside, so that leakage repairs can be effected in the most simple manner. As the circulation is the highest possible, the boiling down requires very little time, and regular, nice grain results. The system can be arranged as low as possible, boiling can take place a few minutes after drawing in, as all the tubes are at once covered with liquor. The emptying of the pan takes place in 25 minutes; no massecuite at all remaining in the pan, steaming out is not required. The circulation of the steam in the calandria is a most effective one, as no long spaces have to be traversed, and as water, oil, air and gases are immediately drained off, blown out or escape, there is no dead space.

Eliminating Pans.—On all well-appointed sugar estates on which the "Double," "Triple," or "Quadruple" effect is in use, eliminating pans for finally clearing the sugar liquor of all impurities before passing it into the effect are found to be a necessary adjunct. One of the most improved forms of this apparatus is the patent eliminator constructed by the Harvey Engineering Co., Glasgow. It has the great advantage of thoroughly cleansing the liquor, and the further advantage of being almost wholly automatic in its skimming action.

This eliminator is shown in sectional elevation in Fig. 73. It consists of a rectangular tank, built of cast-iron plates,

fitted with a trunnion pipe *a*, having two rows of heating tubes *b*, and a skimming gutter *c*, fixed on the end of the tank farthest from the trunnion. The trunnion *a* is fitted with packing boxes at each end, where it passes through the sides of the tank, and thus the whole heating part can be turned up out of the way so that the pan can be thoroughly cleaned. The trunnion *a* is divided by a longitudinal arch into two divisions, and is fitted with a tube-plate having the two rows of tubes fixed therein, these tubes being connected at their farther end by a similar tube-plate and cast-iron return pipe of D section. In working, the steam is turned on to the trunnion, and is admitted into the top section of the same,

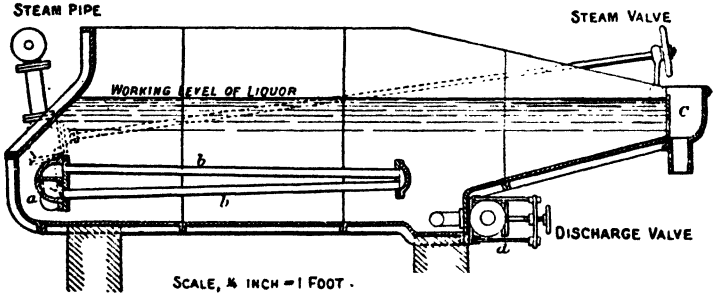

FIG. 73.—ELIMINATOR.

whence it travels along the top row of tubes, is returned at the end of the tubes, by the return pipe, through the under row of tubes, and escapes at the reverse end of the trunnion, where a connection is made to the steam trap, the said trap being capable of working under a pressure of at least 50 lb. per square inch. By the peculiar form of construction of the tank the end next the steam trunnion is much the hottest part of the vessel, and as the liquor when heated rises there is a constant flow of colder liquor from the far end of the tank, which causes a surface current towards the skimming gutter. The mode of working the automatic skimming eliminator is as follows:—

Steam is turned on to the tubes soon enough to cause the contents to simmer, say 210° F., by the time the vessel is charged. Scum thus formed (a thin sticky film) is gently swept into the end skimming gutter. Steam is then turned nearly full open, and the whole is violently boiled; as soon as active boiling takes place, the proper dose of phosphoric acid is thrown in, and boiling continues for about ten minutes. During this time a swift current (about 3 feet per second) is maintained towards the skimming lip, over the whole surface between the ends of the heating tubes and skimming lip. A thin film of froth is maintained constantly flowing over the lip, and on the surface of the froth bubbles the impurities remaining in the liquor are carried away until the whole charge is clean. It is important to leave no obstruction to prevent the free circulation of the juice or liquor, hence a peculiar form of draw-off pipe attached to the run-off valve *d*, has been adopted.

The size of eliminator shown, which is that most generally in use, is for a charge of 1000 gallons.

Multiple Effects.—Cail et Cie. introduced an improvement in the economy of vacuum-pans by working them in sets of 2 or 3, known as "double-effect" and "triple-effect" respectively. The triple-effect apparatus consists of 3 vertical cylinders of copper, each containing 2 tubes, of half the internal height of the cylinders, in which the steam circulates. The cylinders are 6 feet high and 3 feet in diameter, and are surrounded by a wooden casing, which materially retards the loss of heat; they communicate with the outside by pipes. The first cylinder receives the waste steam from the defecators and other machines used in the factory. The steam which rises from the boiling liquid in the first heats the liquid contained in the second cylinder, and the steam from the second in its turn heats the third; a successive diminution of atmospheric pressure in each cylinder takes place, and this reduction allows an active ebullition to go on, notwithstanding

the lower temperature. Two men suffice to look after the apparatus, and if the vacuum-pan be conveniently placed, those who are occupied with it can also attend to the cylindrical generators. By this arrangement all the men employed in looking after the coppers, and the furnace which heats them, are rendered unnecessary, and the sugar is prepared at a temperature which minimises the formation of molasses. The quantity of crystallisable sugar given by the juice thus becomes considerably greater, and at the same time its quality is said to be superior. The juice crystallises in 2 to 2½ hours. The saving of fuel by this system is said to amount to one-third.

Fig. 74 shows an elevation of a set of vertical triple-effect apparatus by Fawcett, Preston and Co. The circulation of the juice and steam is accomplished by means of the Chapman system of patent circulators, by which the highest evaporative efficiency is obtained from the heating surface. The bodies, crowns and upper tube-plates are of mild steel, the bottoms and bottom tube-plates of cast-iron. The vertical heating tubes are of solid drawn brass. The feed-valve or cock on the right-hand pan has a graduated dial for regulating the feed, and there is an improved self-acting syrup testing vessel on the last pan. The exhaust steam enters the heating space of the pan C, and is condensed by the juice contained in the tubes. The first pan C is therefore a surface-condenser, and requires no injection-water; and the condensed water runs away to a receptacle, to be used again in the boilers. The vapour from the juice in C passes into the interior of B producing a second ebullition, and is condensed here again by surface condensation. The condensed water from this pan coming from the cane-juice, can be taken for washing the char if such is used. Finally, the vapour from B enters A, and the vapour formed in A is condensed by direct injection. As, therefore, injection-water is only used for condensing the vapour formed in the pan A, great economy is obtained.

Triple-effects can be constructed either of vertical or of horizontal vacuum-pans. Each system has its advantages; but

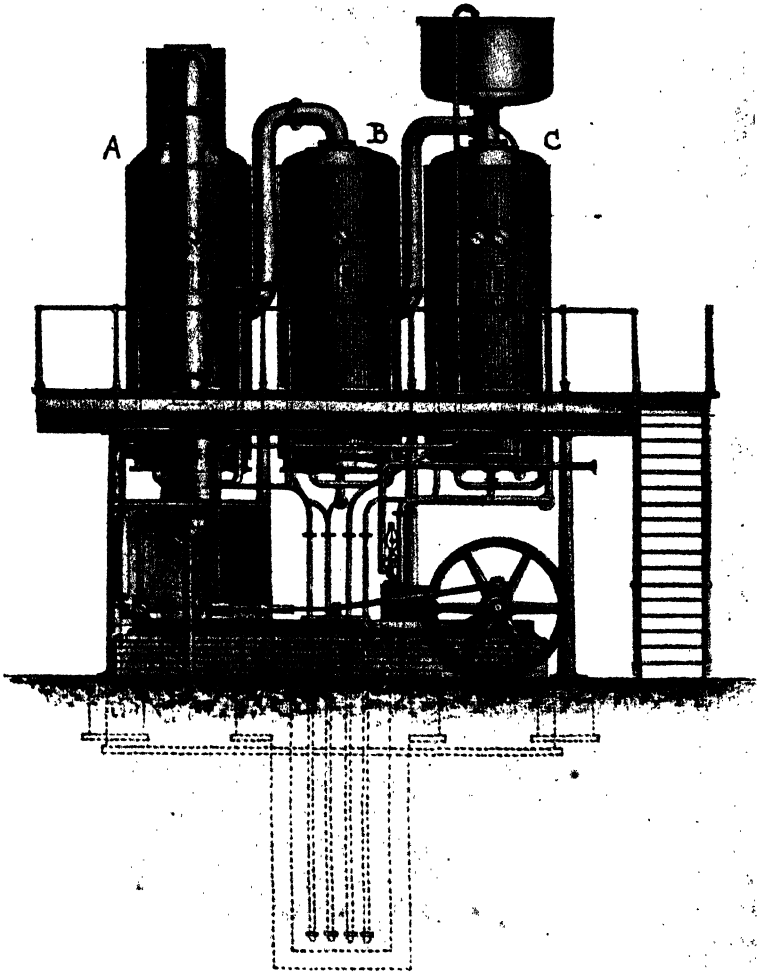

FIG. 74.—VERTICAL TRIPLE-EFFECT.

when equally well constructed and worked, there is little or no difference in their results. On the whole, it may be said

that the horizontal system does not require such expensive machinery and such good execution as the vertical.

The saving in labour secured by the employment of triple-effect apparatus may be conveniently illustrated by some actual figures obtained on two similar estates, with syrup and sugar of identical quality and value, and under equally able management. On the estate using open batteries and a single vacuum-pan, the labour (negro) was as follows: 17 hands at centrifugals, 25 at batteries, 4 at vacuum-pan and engine, 8 collecting fuel, 4 at steam boiler: total, 58, working 18 hours a day = 1044 hours of labour. The second used a juice-heater, defecating- and subsiding-tanks, a triple-effect, and a vacuum-pan, and employed the following labour: 12 hands at centrifugals, 3 at triple-effect, 2 at vacuum-pan, 4 collecting fuel, 6 at steam boilers, 3 engineers, 4 at defecators, 2 at scum-tanks, 2 at syrup-tanks, 2 at molasses-tanks: total, 40, working 13 hours a day = 520 hours of labour. Each factory turned out 13 tons of first and second sugars per day.

Fig. 75 shows a triple-effect by Manlove, Alliott and Co. In this apparatus, the evaporation of the juice is carried out in three successive stages. In the first of the three vessels, in which a vacuum is maintained of about 8 inches of mercury, the juice is heated directly by steam at a pressure of a few lbs. above the atmosphere. The vapour from the juice in this first vessel is used to evaporate the juice in the second vessel, in which a vacuum of about 14 inches is maintained; and the vapour from the juice in this second vessel is in like manner utilised to evaporate the juice contained in the third vessel, in which a vacuum is maintained of about 28 inches, or the best obtainable. By this system of evaporation the latent heat of the vapour from the juice in the first and second vessels is utilised in evaporating the juice in the second and third vessels; thus theoretically 1 lb. of steam used in this apparatus will evaporate nearly three times as much water

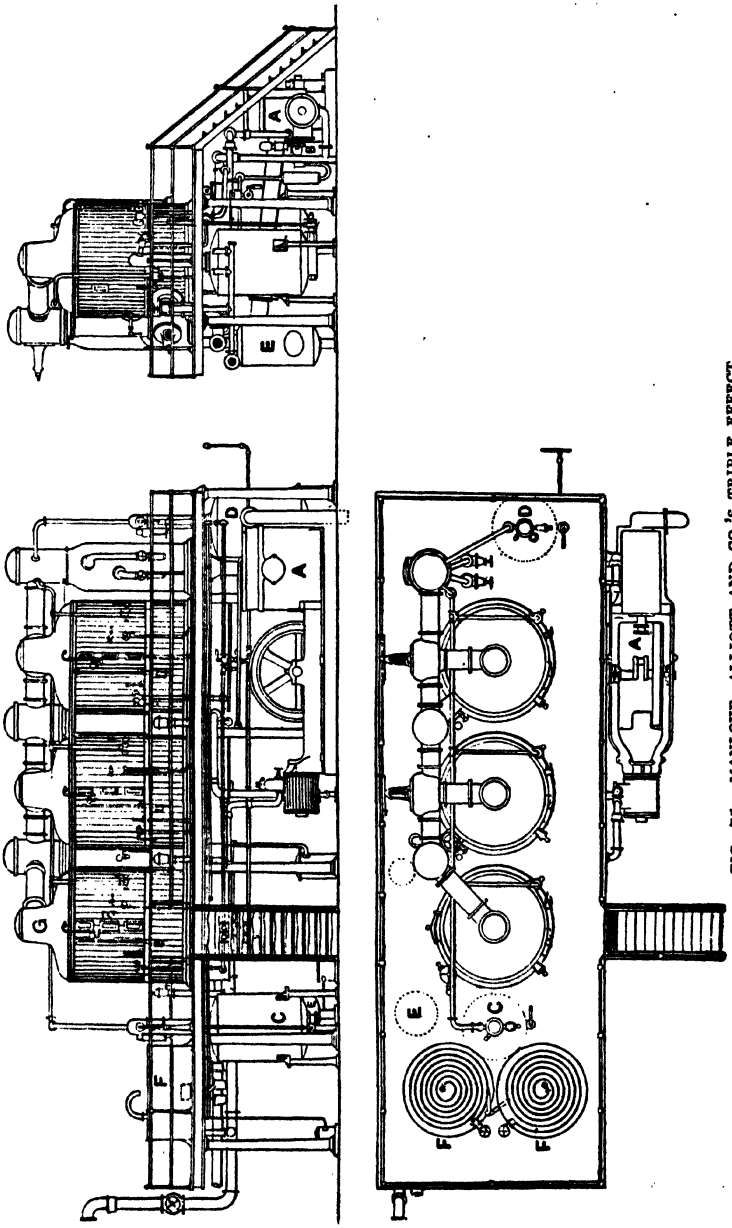

FIG. 75.—MANLOVE, ALLIOTT AND CO.'S TRIPLE EFFECT.

from the juice as would 1 lb. of steam used in an ordinary vacuum pan; added to which the low temperatures corresponding to the vacuum obtained in the different vessels prevent any damage to the juice through over-heating.

The reference letters indicate as follows: A, vacuum pumping engine; B, draining-pump for steam chests; C, filling *monte-jus*; D, emptying *vide-jus*; E, low pressure steam receiver; F, syrup eliminators; G, first vessel.

The three vessels of this apparatus are made of cast-iron, cylindrical in form, with dome covers and specially shaped conical bottoms. Each vessel contains a copper steam chest, in which are fixed a large number of brass tubes about 2 inches in diameter, thus exposing on the exterior of the chest and the interior of the tubes a large area of heating surface in contact with the juice. A space of about 6 inches in width is left between the drum and the side of the vessel all round for circulation of the juice. Low pressure steam is admitted by means of a valve and special steel connection into the interior of the steam chest of the first or No. 1 vessel, which has previously been filled to a depth of about 1 ft. above the surface of the chest with clarified cane-juice. The vapour which arises from the juice passes out of the top of the vessel into a cast iron save-all, which intercepts any watery particles and returns them to the vessel, while the vapour passes down through a vertical pipe and through a large valve into the steam-chest of the second or No. 2 vessel which has also been filled with juice. The vapour from the juice in this second vessel in like manner enters the steam-chest of the third or No. 3 vessel, the vapour from the juice in which is carried past a save-all into a condenser, where it is met with a water-spray and drawn into the vacuum pump. The steam-chests of vessels Nos. 2 and 3 are also connected to the condenser by means of a small copper pipe and valves, by which at starting a partial vacuum can be obtained in vessels Nos. 1 and 2, and the ammoniacal vapours withdrawn.

By a simple but not easily described arrangement of pipes and valves below the platform, the partially concentrated juice from the first vessel can be passed over into the second vessel, from which the still more concentrated juice can be drawn over into vessel No. 3; or a further supply of cane-juice can be drawn from the supply-tanks into either of the three vessels; or the partially concentrated syrup can be passed direct from the first to the third vessel. A further system of pipes is provided for washing out the vessels. The condensation water from the steam-chest of the first vessel is withdrawn by means of a special form of steam-trap, that from the steam-chests of vessels Nos. 2 and 3 is withdrawn by means of pumps worked off the vacuum pumping engine; and pipes and valves are fitted for the purpose of supplying high pressure steam to either of the three steam-chests when desired. The clarified cane-juice is supplied to the first vessel by means of a *monte-jus* connected with the condenser, and can thus be drawn from tanks at some distance below the level of the staging. Concentrated syrup is removed from the third vessel by means of a *vide-jus*, which is also connected to the condenser and delivers into either of two circular eliminating pans. In these pans the syrup can be heated by means of steam coils to nearly the boiling point so as to coagulate and thus facilitate the removal of any albuminous matter or other impurities which may have escaped previous clarification; it is then usually fit to be sent to the vacuum-pan supply tanks. The supply of juice and the removal of syrup are sometimes effected by means of pumps, which can be adjusted to run continuously and maintain the juice at a constant level in the vessels. Sight-glasses, barometers, thermometers, and test apparatus are fitted to each vessel to admit of the process of evaporation being easily observed and tested. Air-cocks and steaming cocks are also fitted for emptying or cleaning purposes. The condenser is of large capacity, and fitted with injection pipes and roses, and the vacuum pumping engine is

extra powerful, to insure the maintenance of a very high vacuum in the third pan, since upon this directly depends the efficiency of the whole apparatus, nothing being more detrimental to the proper working of a triple-effect than any insufficiency of vacuum producing power. A large receiver with the necessary escape valve and other fittings is provided for collecting the exhaust steam from the vacuum pump and various engines of the factory. The whole apparatus is carried by a wrought-iron staging, with hand railing and iron staircase having strong cast-iron pillars. Large two-way change valves are fitted to the vapour pipes between the vessels so that any one or two of the latter may be isolated and the apparatus worked as a single or double-effect when desired. Messrs. Manlove also arrange a closed tubular juice-heater, through which the vapours from the juice in the third pan pass to the condenser. This is used for heating the raw juice from the mill on its way to the clarifiers, and has been found to effect a considerable saving in steam.

Rillieux, of Paris, introduced some improvements in triple-action apparatus used in the manufacture of sugar. The improvements will be readily understood from Plate V., in which Fig. 1 shows a general elevation of the combined apparatus, while Figs. 2 to 6 show separate details.

In multiple action apparatus, direct steam is required ; this is introduced into the receiver for discharged steam A, whence the first evaporating pan is fed through the valve B. If too much steam is introduced, the action of the apparatus is retarded or stopped. In order to prevent this, the receiver A is provided with an equilibrium valve C (shown in enlarged detail in Fig. 2), which regulates the maximum quantity of steam that can be used. It prevents the difference between the pressure upon the one face of the piston of the engines, and the counterpressure on the other side, from sinking below a certain point. For this purpose, the valve is arranged as follows : The valve *a* (Fig. 2) has a stem *b* passing through

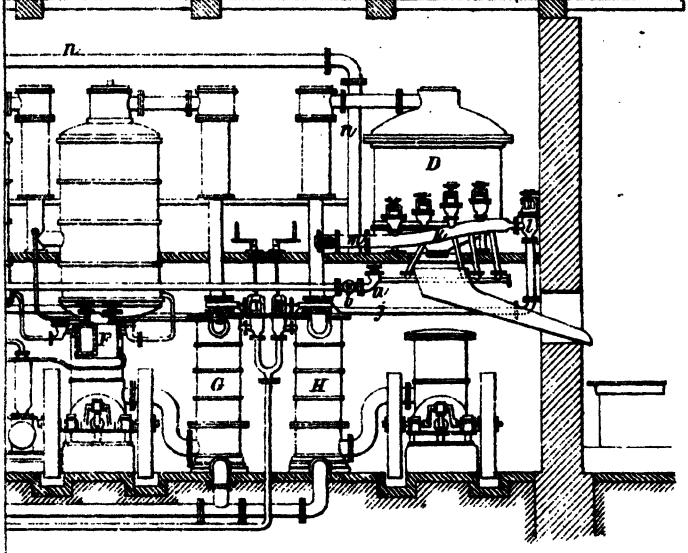

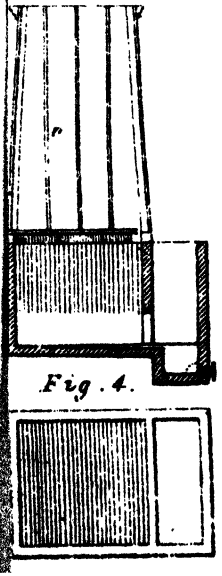

Fig. 4.

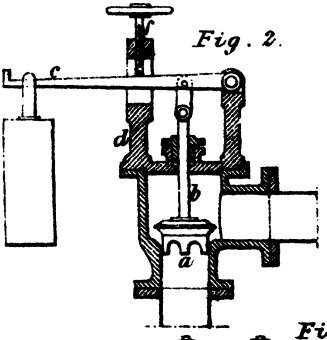

Fig. 2.

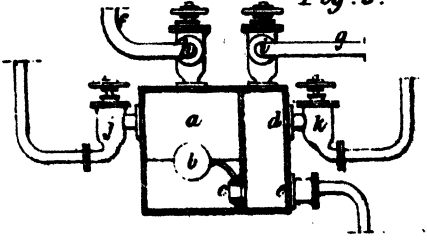

Fig. 3.

a stuffing-box, and connected to a loaded lever *c*; this lever cannot be raised until the pressure in the generators exceeds the limit adapted for the proper working of the apparatus. It works inside a loop *d*, in the top of which is a screw *f*, so screwed down as to allow of only a small amount of motion in the lever and its valve; by means of this screw, the supply of steam is regulated. Instead of arranging this valve C to the left of the receiver A, it may be placed at B, on the pipe leading to the first evaporating pan.

The first receiver being the steam generator of the entire apparatus, and being heated by the discharge steam of all the engines, it is also connected with the discharge water from the coils of the boiling-pan as follows: The steam-coils, being provided at their extremities with check-valves *a* (Fig. 1), are connected to a common collecting pipe *b*, of which the other end *c* is connected to a branch pipe at the bottom of the tubular part of the first evaporating pan. By this means, the small excess of steam that escapes with the water from the coils is made to assist in heating the first pan, while the combined water of condensation from the coils and from the said pan pass off through another pipe *d e*, provided with a check-valve *f*, into a receiver (*g*) or reservoir for the feed-pump to the generators. When the boiling-pan is employed without using the triple action, the passage of the condensing water and steam from the worms to the first pan is prevented by turning a three-way cock *h* into such a position that the steam worms of the boiling-pan communicate directly with the reservoir *g* of the feed-pump.

The cock *h* is arranged in the length of the collecting pipe *b c*, and allows this to communicate either with the bottom of the first pan, or with the reservoir *g*. The water of condensation from the first pan, as also the water contained in the vessel A, flows directly into the reservoir of the feed-pump through pipes in which are the check-valves *f* already mentioned, and the valve *i* on the pipe leading from the

vessel A to the reservoir *g*. The several check-valves *a* to the worms of the boiling-pan, as also those (*f i*) of the first pan and receiver, have the extent of their opening regulated by a screw passing through the top of the valve chamber, so that they shall only allow the exact quantity of steam and water to pass that is necessary for the proper action of the apparatus. The boiling-pan D (Fig. 1) is also heated by the steam (from the discharge steam receiver A), which is conducted into it through the pipe *j* and distributing pipe *k*, the admission being regulated by a valve *l*. From the distributor *k*, it is led into one or other of the three or four coils of the pan. Steam could, however, also be taken from the first evaporating pan. For this purpose, the distributor *k* has a branch provided with a valve at *m*, connected to a pipe *n*, leading to the branch connecting the first evaporating pan with its condensing column. The boiling-pans with steam coils have only a small amount of heating surface in proportion to the charge.

In order to effect boiling with double action with these pans, a considerable pressure is required in the first pan, namely, from ½ to ¾ atmosphere, and even more, according to the size of the coils. Under these conditions, the vacuum is very small, or even nothing in the second pan. Experiment has shown that no deterioration of the sugar takes place at the temperature indicated by this pressure. The pressure is regulated by introducing into the feed vessel for the triple action a sufficient quantity of direct steam, so that it does not interfere with the action of the apparatus. The pressure in this vessel may be one atmosphere or more. Up to the present time, operations have never been conducted under these conditions; the use of direct steam, therefore, has in this case quite a different object from that which ordinarily regulates its employment.

In order to maintain the normal pressure in the first pan, it is necessary in large machines to regulate the pressure by

means of special apparatus. For this purpose there is provided in the steam exhaust pipe of the first evaporating pan a throttle-valve *o*, which is automatically regulated so as to intercept the passage of the steam to the second pan as long as the pressure is not equal to that which it is desired to maintain. For this purpose, the axis of the throttle-valve *o* is provided with an external lever connected to a piston in a small cylinder *p*, on one side of which acts the steam pressure in the first evaporating pan, while the other side is open to the atmosphere. The piston is loaded, so that it only rises when the pressure in the first pan is equal to that desired to be maintained. Thus, when the pressure is low, the piston closes the throttle-valve; while when the pressure rises so as to be equal to that desired to be maintained, the throttle-valve is full open; and at any intermediate pressure, the valve is held in a corresponding intermediate position, thus maintaining the pressure approximately constant. The regulating apparatus may either be a cylinder and piston or plunger, or flexible diaphragm, provided it be sensitive.

If the boiling-pan is heated by direct steam at high pressure, the discharge (condensed water and steam) is conveyed to the first evaporating pan. If steam from the expansion chamber be used, or the escape steam from the engines, the discharge from the boiling-pan will be conveyed to the second evaporating pan. If steam from the first evaporating pan be used for boiling, the discharge passes to the third evaporating pan, and thence to the condenser. A pipe passes for this purpose along the evaporating apparatus, and a branch provided with a valve or cock extends from this pipe to the tubular part of each pan.

In triple-action apparatus, the first evaporating pan is, according to Rillieux's system, provided with two small auxiliary pans (shown at E, in Fig. 5) one serving to evaporate the syrups that have been subjected to the osmose

action, and the other for evaporating the saline liquors, both being connected to the same condensing column.

For drawing off the water of condensation from the second and third evaporating pans, a double-acting pump is generally employed, each suction-valve of which is in communication with only one of the pans. In order to enable these pumps, which are generally too small for the work, to be employed with more effect, the following arrangement is made: The waters of condensation from the second and third pans pass into a small receptacle (Fig. 3), having two compartments; one (*a*) of these, which receives the water from the second pan, has a float *b* actuating a throttle-valve *c* which opens or closes a communication between the first and second compartment *d*, of which the latter receives the water from the third pan, while at bottom it is connected to the suction *e* of the exhaust-pump. The first compartment *a* also communicates by a pipe *f* with the safety-valve of the second pan, and the second compartment *d* communicates with the condenser by the pipe *g*, both communications being regulated by check-valves *h i*. The admission of water into the two compartments is also regulated by check-valves *j k*. When the water-level in the first compartment *a* has sunk to a certain depth, the float closes the communication with the second one, and only opens it again when the water has accumulated to a certain extent. As the float is so arranged as not to allow the water-level to uncover the communicating opening of the two compartments, no steam can pass from the one to the other, although a single pump is employed for drawing off the water from both pans. The back of the receptacle is removable, and can be made of glass for inspection.

To obtain a maximum effect from the apparatus modified as above described, it is necessary to maintain a considerable vacuum in the last pan. As it is much more difficult to obtain an effective vacuum by condensation of the steam by means

of a water jet in this apparatus, than it is to obtain it in the condenser of an ordinary steam engine (probably on account of the presence of a large quantity of air and other uncondensable gases in the steam in the former case), the condensation is effected by bringing the steam into contact with very extended surfaces, over which the water flows in thin films, thus obtaining a very complete contact of the steam with the particles of water. The steam from the safety chamber is, as usual, subjected to a water jet.

To render the air-pumps for the exhaust more effective, the water is removed from the bottom of the condensers G H, by separate pumps I, so that the air-pumps, in only pumping air or gases, can work much more rapidly than in the usual arrangement where they have to pump both air and water. The pumps are, however, kept moistened to prevent heating. The pumps that draw off the water from the condensers deliver it to the refrigerating apparatus.

In this apparatus, instead of causing the water to trickle over layers of faggots J, as usual, a series of vertical canvas screens K are placed close together, and descend to a certain distance above the water-level in a trough L below; these are surrounded by tarpauling, woodwork, or brick walls, and a strong current of air is directed by a fan, as shown in Fig. 6, into the bottom of the inclosure, so as to ascend in the narrow spaces between the canvas screens, while the water discharged by the pump I is made to flow down them in a very finely divided state from perforated pipes or channels *q* above, in the reverse direction to the air currents, whereby the water will be cooled several degrees below the atmosphere. The air currents may also be produced by forming a ventilating shaft *r*, extending some height above the screens, as indicated in Fig. 4. The lower part of the apparatus would in that case be inclosed by movable doors or panels, which would be opened on the side whence the wind proceeds.

The water descending from the refrigerator is collected

in a tank *s*, where the excess of air passes off from it, and whence it is then led by a pipe to the tops of the condensers. The canvas screens may conveniently be made out of old filter-press cloths or sacks sewn together. The apparatus does not require the large dimensions of the faggot house, and this may therefore readily be converted into the former.

This modification introduced by Rillieux received considerable attention among the beet-sugar makers in France, though it was originally devised more especially for cane sugar. Reports which have appeared on its working are loud in its favour. One large manufacturer of beet-sugar, in whose case the employment of the diffusion process gives a very low juice (sometimes only 2½° B., and generally not more than 3¼° B.), states that with the ordinary arrangement of the triple effect he evaporated 1800 hectolitres of juice at 3·2° B., with 150 hectolitres of milk of lime, making a total of 1950 hectolitres (each hectolitre = 22 gallons), to 18° B. per 24 hours; with Rillieux's modification, he evaporated down to a density of 25° B., which, with the increased quantity worked off, is equal to a total evaporation of 5158 hectolitres per 24 hours, or a gain of 3208 hectolitres. This gain is said to be effected at the cost of only a little (the quantity is not stated) additional steam.

Fig. 76 illustrates Foster and Campbell's evaporating apparatus, as applied to sugar-cane juice, made by the Harvey Engineering Co., Glasgow. The advantages claimed by this arrangement are complete and rapid circulation of the juice, combined with proper distribution of the steam in the most effective manner for the heating of the juice. This is arrived at by placing the various vapour inlets at such at angle in relation to the lines of heating tubes, that the steam comes in contact with all the tubes farthest away from the centre of the large return tube.

The first vessel (A^1) has two inlets *b*; the top of this vessel (A^1) has a large outlet to the chamber D, which has large size

downcast pipes b^3 communicating with the four inlets b^4 to the calandria or heating chamber B^2 of the second vessel (A^2). The top of this second vessel has also a large outlet chamber

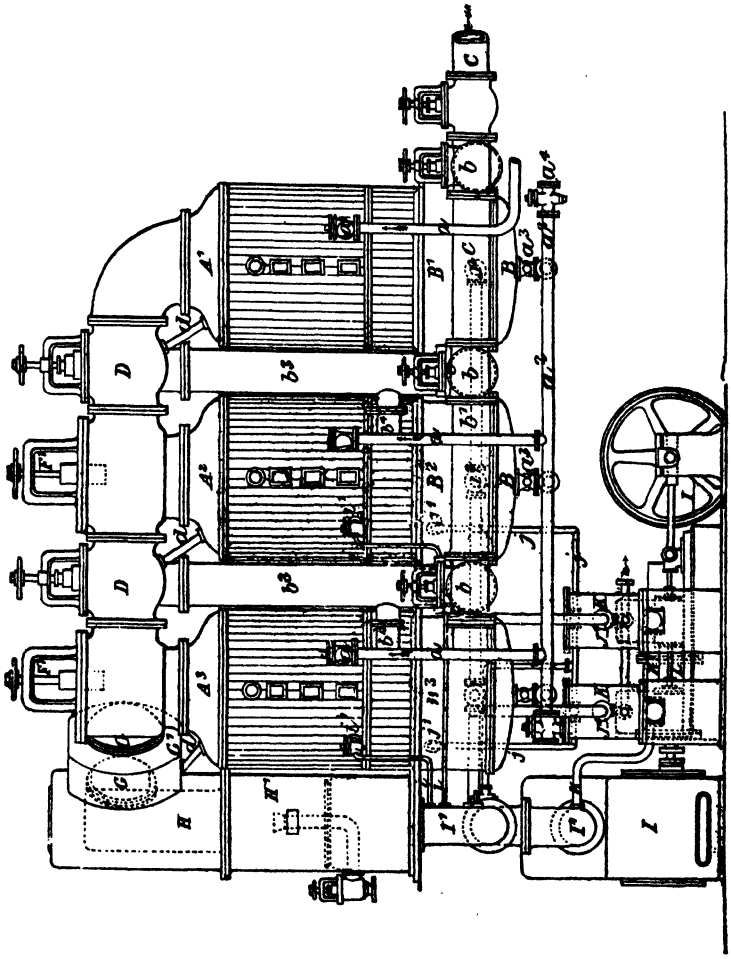

FIG. 76.—FOSTER AND CAMPBELL'S MULTIPLE EFFECT.

D^2 with downcast pipes b^3 to the calandria B^3 of the third vessel, having also four inlets b^4. The top of this third vessel (A^3) is connected to a large size condenser, which is again connected to a displacement vacuum pumping engine of

corresponding size. This pumping engine has calandria pumps (L), which are used for drawing off the condensed water, from the three calandrias B^1, B^2, and B^3. Calandria B^1 is also provided with a large size steam water trap, and the apparatus is in addition fitted with two special large and patent water traps K K between calandrias B^2 and B^3, which make it impossible for the calandria pumps above mentioned to draw anything but water. All the vapour arising from the water contained in these special receivers or traps can be returned to the calandrias. There is a special arrangement of pipes and cocks connected to the main condenser, by means of which gases of any density lodging in any part of the calandrias can immediately be drawn off, the accumulation of such gases being one of the sources of interruption to the free distribution and circulation of the vapour or steam in the calandrias.

The drawing shows isolating valves with connecting valves and pipes, so that any one vessel can be shut off at any time for repairs, and the other two kept working. In general practice this is found unnecessary, and the makers recommend simple direct uninterrupted communication between all three vessels, which makes a very much simpler apparatus, and reduces the first cost considerably. The usual back pressure or exhaust steam of 2½ to 5 lb. on the square inch is ample to work this apparatus, which is automatic in its action, and has given great satisfaction to sugar planters—reducing the cost of labour, and effecting a very great saving in fuel.

Fig. 77 shows a patent multiple-effect evaporating apparatus in which several novel features have been introduced, and is fitted with a barometrical column for dry injection; it was constructed by Fawcett, Preston and Co., Limited, for a plantation in Demerara.

In the first place, the quantity of juice passing through the apparatus is entirely controlled and regulated by the feed valve or cock on the first pan, the passage of the juice from

this pan to the next one, and thence from pan to pan, being automatic and self-regulating. The concentrated syrup is extracted from the last pan by a special steam pump, which

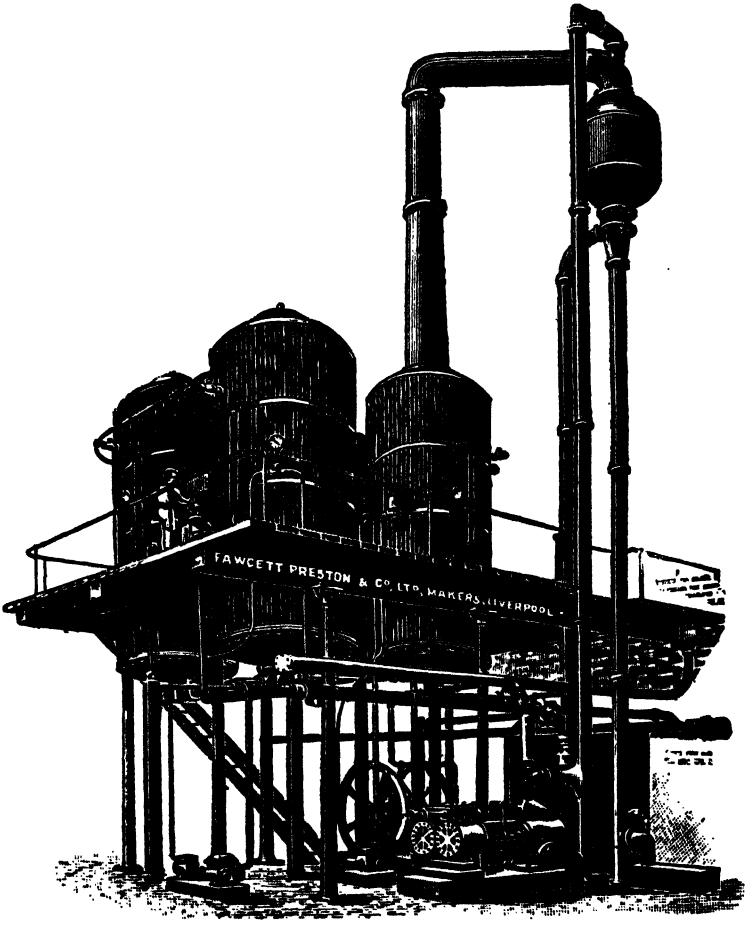

FIG. 77.—FAWCETT, PRESTON AND CO.'S MULTIPLE EFFECT.

can be stopped and started and regulated in speed by a valve attached in a convenient position to the last pan, to meet any variation in the pressure of steam.

Secondly, the condensations in the drum of the first pan

are carried to the drum of the second pan, and then to that of the third pan, and so on. Though the idea of thus carrying the condensations from one drum to another, until they finally issue from the last drum at the temperature corresponding to the pressure therein, having parted with all the heat possible, is not novel, it has hitherto been unacceptable, because of the complications required in the connections between the pans, on account of the differences in pressure in the different drums. These difficulties have now been overcome by a simple system of syphons, which are entirely self-acting, and require no steam-traps of any description, and since their introduction in 1888 this system has been adopted either in its entirety or in a modified form by most of the leading engineers in Europe and America.

The same firm manufacture apparatus of similar design, but capable of evaporating up to 20,000 gallons of juice from 10° to 27° Baumé, per hour.

Yaryan System.—The method of operation in this apparatus is as follows :—

The liquid is pumped through the tubes of the first effect, the entrance to which is partially closed, so that only about one-tenth the area of the tube is filled with liquid, the openings being so arranged that there is an equal feed to each tube. Steam being let into the shell of the first effect causes the liquid fed into the tubes to boil, and the ebullition bathes the whole interior surface of the tube with a film of liquid.

When the liquid reaches the other end of the tube it is completely separated from the vapour by impingement on the baffle plates in the separating chamber. The vapour now passes into the drum of the next effect to form the heating agent there, while the liquid is drawn through the tubes of that effect by the lower pressure or partial vacuum maintained therein. The same process is repeated according to the number of effects.

The vacuum is maintained in the last effect by means of

the vacuum pump and condenser, while the concentrated liquid is withdrawn by the tail pump.

The condensed vapour is drawn from each shell by the superior vacuum in the shell of the next effect; and from the shell of the last effect either by the vacuum in the condenser or by a small drip pump, if it is desired to utilise the drip water.

The various pumps can be worked, if desired, by one engine.

The following are claimed as advantages of this system in its application to sugar solutions:—

Short exposure of the liquor to heat (five minutes altogether), saving in fuel, ease in cleaning, rapidity in getting to work, no waste of sugar in priming, automatic working and economy in first cost owing to the smaller cost for freight and foundation.

The Lillie Evaporator.—In the usual triple effect used on sugar estates, the juice to be treated is inside the heating tubes, and the vapour on the outside, but in the Lillie apparatus the steam or vapour is inside the tubes, *a*, Fig. 78 which are of copper, 3 inches in diameter and 6 feet 5 inches in length. These tubes are open at one end, that end being expanded into a thick tube-plate at the steam chamber *d*, while the other end is free, and is closed except for a very small hole to allow any air or gases to escape. The tubes, which are slightly inclined, are thus free to expand or contract without affecting the body of the evaporator, an advantage not obtained where the tubes are expanded at both ends. On the top, front, and sides, *b*, *c*, and *e*, there are vapour spaces, *f* is a man-hole door, and *g* rear door. Above the evaporating tube is a row of distributing tubes, Fig. 79, with a slot along the top surface. The end at the front is closed; the other is open to the manifold box on the tube-plate, Fig. 78. The circulating pumps are of the centrifugal type, there being one under each vessel. The pumps are on one shaft driven by belting from a special horizontal engine. The juice pumped from the float box *k* is

delivered through piping into the manifold box, and overflowing through the distributing tubes, trickles down the battery

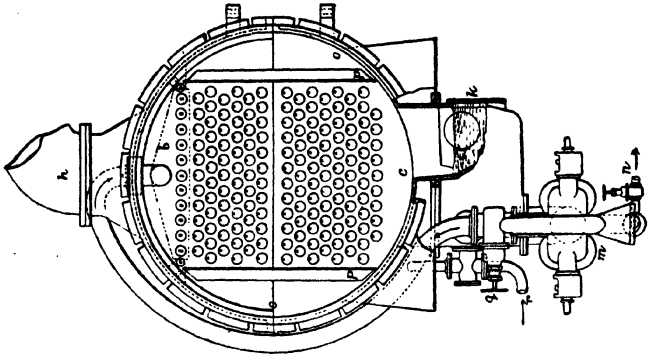

FIG. 79.—LILLIE EVAPORATOR. (Transverse section.)

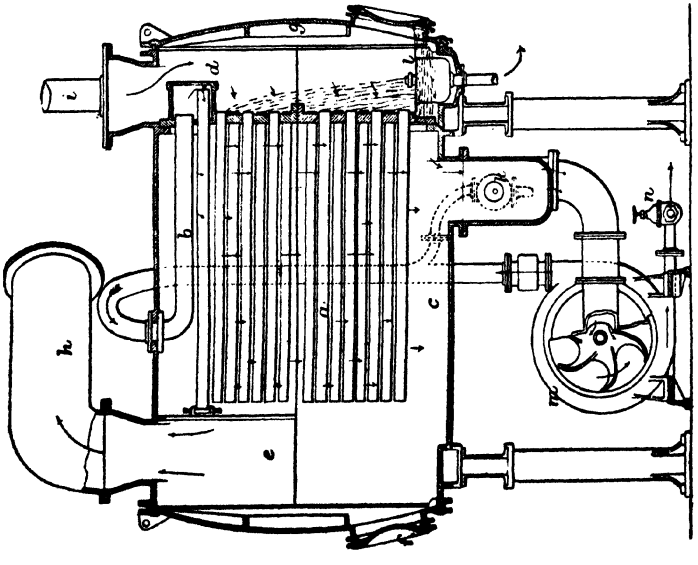

FIG. 78.—LILLIE EVAPORATOR. (Longitudinal section.)

of evaporating tubes which form a square as shown in the cross section. As it flows in a film over the heated tubes the evaporation is very rapid, each square foot of heating surface evaporating about 13 lb. of water. The vapour given off from the juice passes through the main *h* into the second vessel, and does the work of evaporation there, the vapour from the second vessel passing to the third and doing the work there. The third vessel is connected to a large-sized double-acting displacement vacuum pump. The steam doing the work in the first vessel, which passes in at the main *i* and through the chamber *d*, is the exhaust from the various steam engines in the factory. By this means, a great saving of fuel is obtained. The water resulting from the condensation of the steam, flows through a pipe fitted with the trap *l* to prevent escape of steam, passing thence into the steam chamber of the next cooler effect, so that the heat still existing may assist there in the work of evaporating the juice. This is claimed as an element in the economy of the Lillie system. The original feed of the thin liquor through the pipe *r*, controlled by a balanced valve *q* operated by a float *k* so as to regulate the feed to suit the quantity passing away as vapour from the effect. The discharge-pipe has a hand valve *t*, and if by it the discharge is increased or diminished, the float *k* comes into play to open or close the feed valve. By means of this float valve the discharge and feed of the successive effects automatically control each other. No tail or syrup pump is required, as the circulating pumps used are sufficiently powerful to send the concentrated liquor out into the air against the vacuum in the effect.

To make one ton of sugar by the old method of the copper wall, when the exhaust steam of the engines was blown out into the air, required one ton of coal in addition to all the crushed cane or megass. By means of the triple effect, concentrating under vacuum, the crushed cane or megass alone is sufficient for raising all the steam required in a properly designed sugar factory.

A Lillie apparatus which has 3600 square feet of heating surface will concentrate 6500 gallons of juice per hour from 7° to 30° Baumé.

The Kestner Evaporator.—We are indebted to the inventor for the following particulars with regard to this apparatus.

The Kestner evaporator made its appearance some years ago, and was immediately installed in various industries, but it was not until 1906 that it was first used for sugar in the Niezychowo factory in Posen (see the Report by Gropp, Dec. 15, 1906, before the Eastern Section of the Association of the Sugar Industry in Germany, published in their proceedings).

The results of this application were most interesting for two reasons, firstly, because of the peculiar conditions under which the apparatus was installed, as the first pan of a triple effect working under pressure and fed by steam at 135° C., the boiling taking place at 128° C.

The second interesting result was the high coefficient of heat transmission obtained, which was nearly double the figure reached until then, that is to say, 11·4 kilos. of water evaporated per square metre, per hour and per degree of fall in temperature.

Since that time many evaporators have worked in Europe during the last season, and several evaporators have been erected in sugar houses in the colonies.

Its characteristic feature is the evaporation in one single passage through very long vertical tubes (22 feet) by a new method of circulation, called by the inventor "film climbing" or "*grimpage.*" Fig. 80 represents a small pan in vertical section. In the steam shell M are the tubes R; S is the separator in which the concentrated liquid separates from the vapour which is formed. A baffle D, which is shaped like a centrifugal turbine, forces the steam to move in rotation, which causes the separation of the particles of liquid which are driven against the inner walls P by centrifugal force. The

concentrated liquid passes out continuously by L, the vapour by B. The steam for heating is admitted at A, and the liquid to be concentrated, in a continuous stream at T.

Concentration of Syrups by Means of Cold.—Many years ago, Kneller proposed to concentrate syrups by forcing cold air through them, and his plan was much improved by Brame Chevallier. The latter provided his vessel with a steam-jacket, a coil of piping inside, and a set of tubes; through these last dry air is forced to the bottom of the pan, and, rising through the body of the liquid, carries off a large amount of watery vapour, at the same time keeping the liquid at an extremely low temperature.

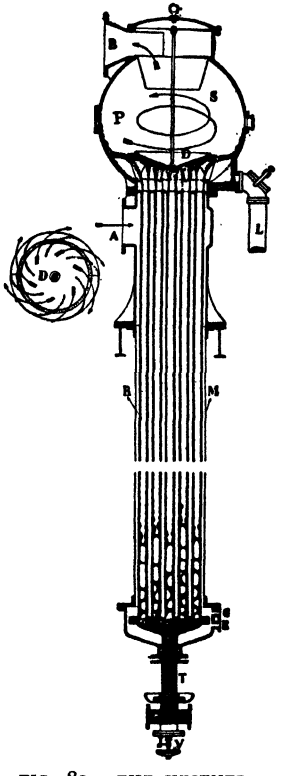

FIG. 80.—THE KESTNER EVAPORATOR.

In 1865, Alvaro Reynoso proposed to rapidly cool the syrup in suitable machines, and thus form a confused mass of particles of frozen water (ice) and dense syrup. The mixture is afterwards separated by being passed through centrifugals, and the syrup deprived of ice is evaporated *in vacuo* ready for crystallisation.

It certainly seems a most singular circumstance, that, in the face of the many drawbacks and great cost incurred by concentration by means of heat, and in presence of the many improvements introduced of late years into refrigerating and cold-producing apparatus, so little effort is made by sugar-growers to adapt such a convenient system to their needs. A similar crystalline product, namely common salt, is obtained by hundreds of tons from sea-water, by the effect of natural

cold, in favourable localities; and there would appear to be no valid reason why a modification of the plan should not succeed on an extensive scale with sugar solutions. Experience would soon show to what point it was most convenient to carry the freezing—whether the water should be entirely removed, or whether sufficient should be left, as in Reynoso's plan, to form a dense syrup with the sugar, leaving only a very small proportion to be evaporated off. There are now many cheap and efficient forms of refrigerating apparatus in the market, so that trials could be made on the large scale at no great expense. Even if the method effected no considerable saving in cost, which is hardly probable, it would possess a great advantage in lowering the temperature of tropical "boiling houses," entailing comfort to the workmen and consequent increased care and attention in carrying on the operations.

CHAPTER VI.

CURING THE SUGAR.

It will be readily understood that the products of the various operations described in the preceding chapters, differ widely in character, and demand separate treatment in their preparation for the market. This treatment is generally known as curing, and embraces the whitening or bleaching of the sugar. The several plans will be discussed in succession.

Simple Drainage.—This is the oldest and crudest method, and is on a par with the wasteful and slovenly copper wall. In order to remove a certain amount of the molasses and other impurities, the semi-liquid mass, dug out of the coolers as soon as it is sufficiently cold, is placed in casks with perforated bottoms; the holes in the casks are loosely filled with twisted leaves or rushes (the latter long enough to reach above the contents of the casks), in such a manner as to form the roughest imaginable kind of strainer. The casks stand meantime on rafters over an immense tank. Here the draining process slowly and imperfectly goes on, a portion of the molasses escaping into the tank below, but much still remaining imprisoned in the mass of sugar. The separation of the molasses is so incomplete, that very great leakage and waste continue while the sugar is on its way to European markets. Sugar which has been cured in this way is termed muscovado, and is the most impure form of raw sugar. It is still produced in some countries, but it is pretty well obsolete in the English and French colonies, and its manufacture is decreasing rapidly in Louisiana.

Claying.—The first improvement upon this barbarous

system was introduced by the Spaniards and Portuguese in Cuba, and is based upon the fact that the impurities present in muscovado sugar are much more soluble in water than the crystalline sugar itself. Thus washing with water will effect considerable purification. The earliest manner of carrying this out was by placing the sugar in inverted cones with a minute aperture in the apex, which is stopped up during the filling and for about 12 hours afterwards; upon the mass of sugar in the cone, was placed a batter of clay and water (hence the term claying), the object being to ensure a very gradual percolation of the water through the mass. This water carries with it the uncrystallisable sugar and colouring matters imbedded between the crystals of the sugar. The resulting sugar is much lighter-coloured than muscovado, but the grain is very soft, and the operation is most wasteful. In Bengal, a wet rag is sometimes substituted for the clay batter.

Vacuum-Chest.—The vacuum-chest consists of an iron box with a tray of wire gauze above, and connected with air-pump suction below. The sugar is spread on the tray, and the downward suction produced by working the air-pump creates a tendency in the fluid portion of the mass to separate itself. Effectual separation, however, can only be attained when the grain or crystal of the sugar dealt with is large, hard, and well formed: with small or soft grain, the process is utterly inapplicable, and its use is therefore restricted.

Centrifugals.—The preceding modes have been practically superseded by the use of centrifugal machines or hydro-extractors, the latter name being given them because they were first used for drying textile goods. There are many varieties, but all consist essentially of a cylindrical basket revolving on a vertical shaft, its sides formed of wire gauze or perforated metal, for holding the sugar. The basket is surrounded by a casing at a distance of about 4 inches, the annular space thus left being for the reception of the molasses,

which is expelled by centrifugal force through the sides of the basket when the latter revolves at a high speed. A spout conducts the molasses from the annular space to a receiver.

An example of a simple centrifugal is shown in Fig. 81; more complicated forms are used in refineries, and will be described in Chapter XIX. The machine in the figure comprises a revolving basket *a*, carried by a cast-iron dome *b* upon a central shaft, arranged with driving pulley, footstep, and neck-bearing, on the central bracket *c*, the whole being supported by the outer cast-iron casing *d*, which collects the liquid thrown off from the material in the basket, and conveys

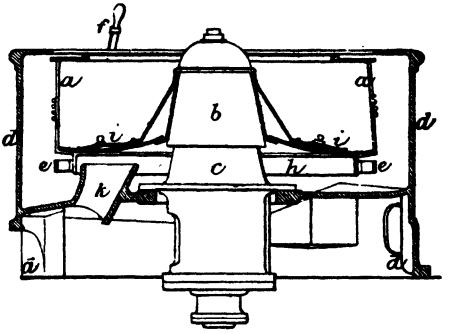

FIG. 81.—SIMPLE CENTRIFUGAL.

it away through a discharge-pipe. The brake *e*, for stopping the motion of the basket, is applied by the lever handle *f* acting upon the angle-iron ring *h* riveted to the cylinder bottom. The sugar is discharged through two copper doors *i* covering openings in the cylinder bottom, and passes down the shoot *k* cast in the outer casing, into a receptacle below.

The hydro-extractor has become such an important factor in many industrial processes, that some large engineering firms devote themselves specially to its manufacture.

The treatment of the molasses separated from the sugar in the curing and bleaching operations has been already described under the use of the vacuum-pan (see p. 272).

Amorphous Sugar.—A certain form of sugar containing the entire constituents of the juice in the form of a soft amorphous or uncrystalline powder, of a white or pale colour, has been manufactured since the earliest times wherever sugar-cane has been grown.

In China and India it is known as "basket" sugar; a similar sugar produced in Portugal is called "Pélé," and in Brazil and South America, "Faroffa" or flour-sugar.

The process consists in liming, heating and clarifying the juice, and boiling it in open pans until a thick mass is produced, when it is transferred to another vessel, and still further heated, while being stirred and beaten with paddles, until it becomes a dry powder, the process being sometimes assisted or hastened by the addition of a small quantity of the dry sugar from previous operations.

When manufactured on a large scale, the clarified liquor is boiled in a vacuum pan until 35° Bé. is reached, when it is transferred to a steam-jacketed vessel fitted with mechanical stirrers and treated as above described. It is then separated by sieves into different grades, the coarser portion being crushed by any convenient method or returned to the next batch.

In the process patented by Mr. J. Miller, of Penang, the steam jacket is replaced by a jacket filled with mineral oil boiling at a high temperature and fitted with means for heating it, so that the temperature is kept under complete control. A patent has recently been taken out by Mr. E. Shaw, A.M.Inst.C.E., of the Eureka Manufacturing Co., Broad Street House, London, for an apparatus for producing this class of sugar on a large scale. The process is as follows:—

The heavy white liquor from the vacuum pan is heated to a high temperature under extreme pressure while passing through a coil in a closed vessel, and is then blown out or ejected through a small nozzle, when, owing to the heat, the water present upon being relieved from pressure immediately evaporates, leaving the sugar in a condition to be converted

into a fine powder by means of mechanical stirrers. The product is finally sifted and dealt with as in the other methods of making this sugar, previously described.

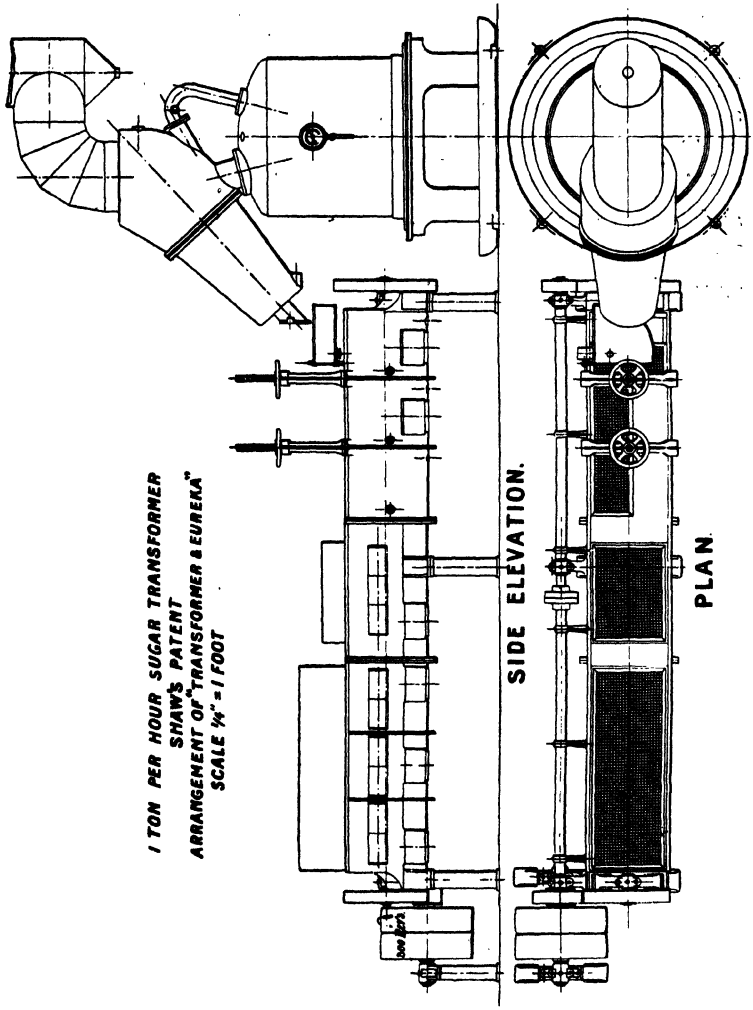

FIG. 82.

The apparatus is known as the Eureka Separator and Transformer, and is shown in Fig. 82. It consists of two

parts, viz.: The evaporator which comprises a steam dome, internal coil, pump for forcing the syrup through this coil, and the usual appliances for indicating and regulating the pressure, temperature and supply of syrup. The second part consists of a long jacketed trough containing a revolving shaft with stirrers, beaters and sifters, and the necessary mechanical arrangements for driving them.

The time occupied by the syrup in passing through the coil is only from a few seconds to a minute, when the steam and sugar part company, the former to be either utilised in heating or otherwise, and the latter to be treated until it assumes the form of a soft powder.

CHAPTER VII.

COMPLETE FACTORIES.

IT has been quite impossible in the preceding chapters to combine detailed descriptions of the many forms of apparatus used to effect the same purpose, with a connected account of the operations through which the material passes. It will therefore be interesting to follow the processes in general, by the aid of a few representations of complete factories on different systems.

A Tropical Sugar Factory.—Ever since the great fall in price of sugar about 1884, a most severe struggle has been going on between the producers of the temperate zone, who obtain sugar chiefly from the beetroot, and those of the tropics, who manufacture it chiefly from the sugar-cane.

During that period the increase in the production of beetroot sugar has been enormous, and it seemed for a time almost as if the advantages of cheap fuel, cheap skilled labour, cheap capital, a bounty—in some cases a very large bounty—supplemented finally by the operation of the Cartel, together with the nearness to a market, would enable the producer of the temperate zone altogether to outpace his rival of the tropics, and to supplant him very largely indeed in the sugar markets of the world.

The keenness of the competition very quickly led the tropical producer to improve both his agriculture and his machinery; and to-day there is little doubt that, when he possesses suitable and accessible lands, a reliable supply of labour, and satisfactory apparatus for manufacture, he can deliver his sugar at a profit, say to the English or American

markets, at a price which will enable him to hold his own against the manufacturer of beetroot sugar, provided the terms of the competition be not rendered too unequal by bounties, or other special advantages not dependent upon actual cost of production.

The apparatus used in the production of sugar in a modern tropical sugar factory is varied in character, and undergoes a good deal of modification according to the market and the class of sugar which it is desired to supply; but the object of this chapter is to present a short description of a factory fitted with such apparatus as should enable it to manufacture sugar well and economically.

Any large factory ought if possible to be worked by night as well as by day, only a comparatively short stoppage being made in each 24 hours to enable the machinery to be adjusted and cleaned down. When working thus, the crushed cane, sometimes supplemented by a certain amount of "trash" from the fields, usually supplies all the fuel needed for the factory; but a factory working by day only, always works less economically in respect to fuel, and usually needs a supply of wood or coal in addition to the crushed cane and any "trash" that may be available.

For the purpose of description, the machinery and apparatus may conveniently be divided into the following sections:—

1. That used for extracting the juice from the cane.
2. That employed for defecating or purifying the juice.
3. The apparatus for evaporating the juice and boiling to grain.
4. That used for separating the syrup and molasses from the crystals of sugar.
5. The steam generators.

1. *Apparatus used for Extracting the Sugar or the Juice from the Cane.*—The almost universal method of extracting the juice from the cane is to pass the cane between heavy rollers and squeeze the juice out of it by means of pressure.

The process of diffusion so widely used in extracting the sugar from the beetroot has indeed also been applied to the extraction of sugar from the cane; but in no cane-producing district has the process found such favour as to be generally adopted. One or two factories have been put up in a district, but the results obtained with them have not been such as to induce the general adoption of the system. This arises partly from the fact that although there is more thorough extraction of the sugar than is obtained by squeezing the juice from the cane, yet the plant is more costly, the juice or sugar solution obtained contains more impurities, and the slices of cane which have undergone diffusion, even after these slices have been passed through a mill in order to extract as much as possible of the moisture from them, are less fitted to act as fuel than the cane from which the juice has been extracted by crushing. At the same time the evaporation to be performed is usually greater than where the juice has been extracted by crushing mills.

It seems accordingly of little use to give any lengthy description of a diffusion plant for extracting the sugar from the sugar-cane. When this process is used, the cane is cut into thin slices by a suitable cane cutter, and these slices are treated in diffusion vessels, similar in design to those used for beetroot. The slices after treatment are passed through a crushing mill in order to remove enough of the water to render it possible to burn them.

We will now proceed to describe the extraction of juice from the cane by means of crushing.

A modern sugar mill usually has three horizontal rollers carried in heavy side frames, and arranged as shown in Fig. 83, one above and two below, in such a way that the cane in passing through is first crushed between the top roll and the first side roll or cane roll, and then crushed a second time between the top roll and the second side roll, or "begass roll." As there is a considerable space between the

two side rollers, due to the fact that both are driven by pinions gearing into the same pinion on the top roll shaft, and to other details of construction which combine to keep them apart, the cane which has been partly crushed between the top roll and the cane roll needs to be removed from this and guided to the megass roll by a plate slightly bent into a concave form, and firmly supported in position. This plate should almost touch or scrape the cane roll. The guide plate together with its support is called the "trash turner."

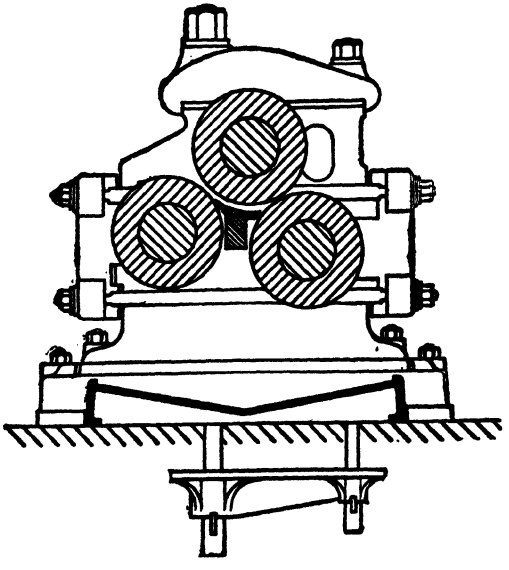

FIG. 83.—ALLIOTT AND PATON'S TRASH TURNER.

The position of this guide plate in relation to the rolls, its curvature and inclination, are matters of considerable importance, as an improperly constructed trash turner will absorb much power in useless friction, and also be likely to cause breakdowns, either by itself giving way, or by putting undue strain on other parts of the machinery.

It is possible very greatly to decrease the width of the trash turner, and therefore probably the friction of the cane

upon it, if on each side one of the bolts holding the caps retaining the top bearings in position be carried so far away from the central line of the mill that it passes outside the shaft of one or other of the side rolls. In order to effect this end, Messrs. Alliott and Paton devised an arrangement as shown in Fig. 84. It will be seen that this arrangement permits the side rolls to be brought very much closer together than is usual, and the width of the trash turner may be greatly reduced, in fact the extent to which it may be reduced is only

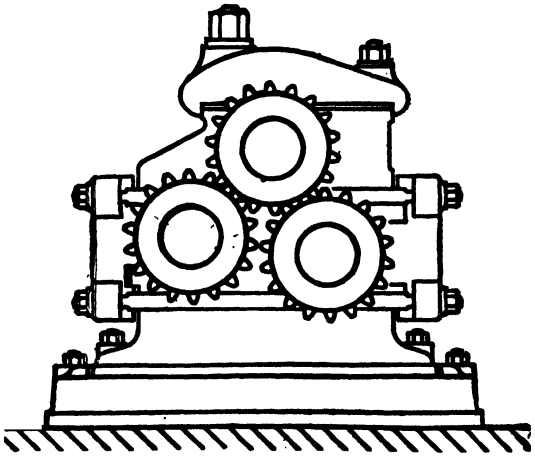

FIG. 84.—THREE-ROLLER MILL.

limited by the necessity for keeping it of sufficient substance to withstand the strain upon it.

As the usual surface speed of the mill rolls is about 15 or 16 feet per minute, when one mill only is being used, and from 20 to 25 feet when the cane is passing through two or more mills in succession, powerful double gearing is needed in order to permit the engine to run at a reasonable speed, while the slow speed required for the mill rolls is maintained.

Both engine and gearing need to be of unusual strength, as the mill may at any moment be choked by an excessive

supply of cane, which may bring the mill-engine and gearing to a standstill very sharply indeed. The engine is provided with reversing gear to enable it to run backwards in order to free the mill in such cases.

A non-condensing horizontal engine of ordinary type is generally made use of. Non-condensing engines are ordinarily employed for this and other purposes in a sugar factory, because the exhaust steam which has passed through them can be advantageously used for effecting the heating or the evaporation of the juice. Thus, the engines, even if they

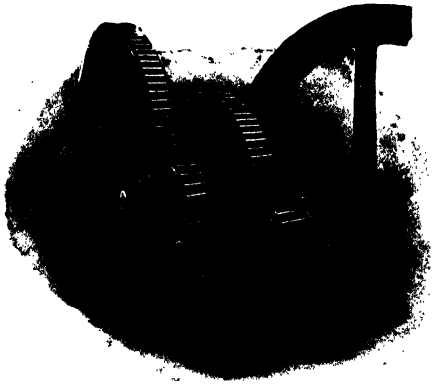

FIG. 85.—GEARING OF SUGAR MILL.

should themselves be of a not very economical type, only extract from the steam the quantity of heat needed to develop the power actually used, while any heat not thus employed is passed on for use in heaters or evaporators.

It has now become usual to support the bearings of one or more of the rolls by hydraulic rams (see Fig. 87, p. 319). These permit the rolls to adjust themselves automatically to any difference in the quantity of cane passing through the mill, and prevent the inferior crushing which would otherwise result should this quantity be suddenly reduced. They also act as a safeguard against breakdown should pieces of iron

be accidentally or maliciously passed through the mill, or in the event of a very sudden glut of canes.

The mill is usually fed by means of a carrier, Fig. 86, some 60 to 100 feet long, the length varying with the size of the mill, and the quantity of cane to be fed to it, and with local conditions. The wagons (in large factories these are railway wagons), on which the cane is brought from the field, are run on each side of the carrier, and the cane should be tipped or thrown from them directly on to it. In some cases where there is a scarcity of wagons the cane is thrown into heaps on the ground, and lifted thence to the carrier, but this entails double handling and should be avoided. It is usual in Cuba to cut the canes to be crushed into lengths of about 3 feet. This permits the abandonment of the usual type of cane carrier. The carts containing the canes are emptied into a pit containing an elevator, by means of which they are carried to the cane crusher, and thence pass on to the mills. The carrier is sometimes driven by a small separate engine, but

FIG. 86.—IRONWORK FOR CANE CARRIERS.

more usually by chain and wheel gearing from one of the roller shafts; but in this case a friction or other clutch is interposed to enable the carrier to be stopped at any moment while the mill continues running, should the carrier be bringing cane faster than the mill can take it, and also to prevent the carrier from being run backwards should the engine be reversed. The carrier delivers the cane on to a long and steeply inclined table or shoot, down which it slides to the opening between the top roll and the cane roll. These rolls are somewhat roughened, and as they revolve they draw the cane in between them, the process being aided by the fact that the canes are more or less interlaced, and those already being drawn through the rolls help to draw others in. If the rolls become smooth, and the mills be set to give a very severe pressure, the hard silicious rind of the cane will frequently (when no cane-crusher is used) prevent the rolls from getting hold of it, and the mill will refuse its feed, or take it very imperfectly and with much groaning and trembling. The work done in a factory is often seriously decreased in this way, and it is sometimes necessary to stop work altogether until the rolls have been roughened.

The crushed cane or megass, as it leaves the mill, is detached from the megass roll by a steeply inclined table which is brought into contact with it, and is delivered on to a second carrier, which takes it away either to a second mill or to the boilers, where it is used as fuel.

Cane usually contains some 10 to 12 per cent. of woody fibre and other insoluble material, the remaining 88 or 90 per cent. being juice. A good mill will extract from 66 to 72 per cent. of juice. As a very considerable quantity of juice is thus left in the cane, a second mill is now generally placed behind the first, and by its aid an additional 5 or 6 per cent. of juice, or in some cases more, is obtained. In order to assist the extraction of juice by the second mill, the crushed cane is sprinkled with hot water on the carrier between the first and

second mill, and in some cases this carrier is covered in, and low pressure steam admitted to it. The object in all this is to effect a dilution of the juice remaining in the crushed cane or megass, so that the diluted juice still remaining in it after passing the second mill shall be less rich in sugar. Some 12 to 15 per cent. of water is usually added. Formerly this quantity was sometimes increased to 20 per cent. or even 30 per cent. An excessive addition of water is, however, inadvisable, as it necessitates an increase in the size and cost of the defecating and evaporating apparatus, and increases the quantity of fuel needed to operate the factory. It is now generally admitted that any addition of water beyond 12 to 15 per cent. is undesirable.

Exception must, however, be made in the case of certain American plants working in regions (such as Hawaii), where the sugar produced is admitted free of duty into the United States. In some of these plants the dilution of the juice by water, is stated to be as much as 30, and in some cases even over 40, per cent. It must be remembered, however, that the sugar made by these plants is sold at an artificially high price, because, without having paid duty, it is sold in a country where the customs duties on sugar are very high.

The advantage gained by this large addition of water appears to be the extraction of a certain amount of additional sugar, raising the quantity extracted from say 92 or 93 per cent. to 95 or 95½ per cent. of the total sucrose present. It is, however, gained at the cost of having very largely to increase the capacity of all the apparatus required for defecation and for evaporation, extending to the issue of the concentrated juice from the multiple effect. At the same time there is a large increase in the quantity of steam needed for defecation and for evaporation.

Apparently, with the increased value obtained on account of the sugar being sold in a protected market, it pays in such regions thus largely to dilute the juice; but it does not by

any means follow that it would pay to adopt the same system in regions where there is no increased value of the sugar owing to special protection.

The second mill, where one is used, is sometimes made with only two rollers, so that the crushed cane is only squeezed once in passing through it. It is contended that with a given engine power, this crushing will be much heavier than if the same power were applied to a three-roller mill, and that therefore a better extraction will be attained; but, on the other hand, there is only one crushing instead of two, and also the two-roller mill is difficult to feed, arrangements having to be made to force the cane between the rollers where it is employed.

In large factories, three three-roller mills are used in train, and in such cases, with the addition of 12 to 15 per cent. of water, the diluted juice should be equal to a yield of 81 to 83 per cent. of undiluted juice and 91 to 93 per cent. of total sugar from cane containing 88 to 90 per cent. of juice and 10 to 12 per cent. of woody fibre.

In American practice three three-roller mills (this combination being spoken of as a nine-roller mill) are generally driven by a single engine working through three sets of gearing, and it is not unusual where a crusher is employed in connection with the three mills to drive this also from the same engine through suitable gearing. Until recently English practice has more generally given to each mill its own separate gearing and engine; enabling it to be worked quite independently of the other mills as regards speed and other details of working. For the American system it is claimed that it gives a very compact arrangement, the carriers between the three mills in the set being of short length, and the total space occupied being comparatively small, while at the same time the cost of the plant is less than where each mill has its own separate engine and gearing. The saving both in space and in cost appeals strongly to purchasers, and has led to the construction of nine-roller mills by English makers. It is claimed, never-

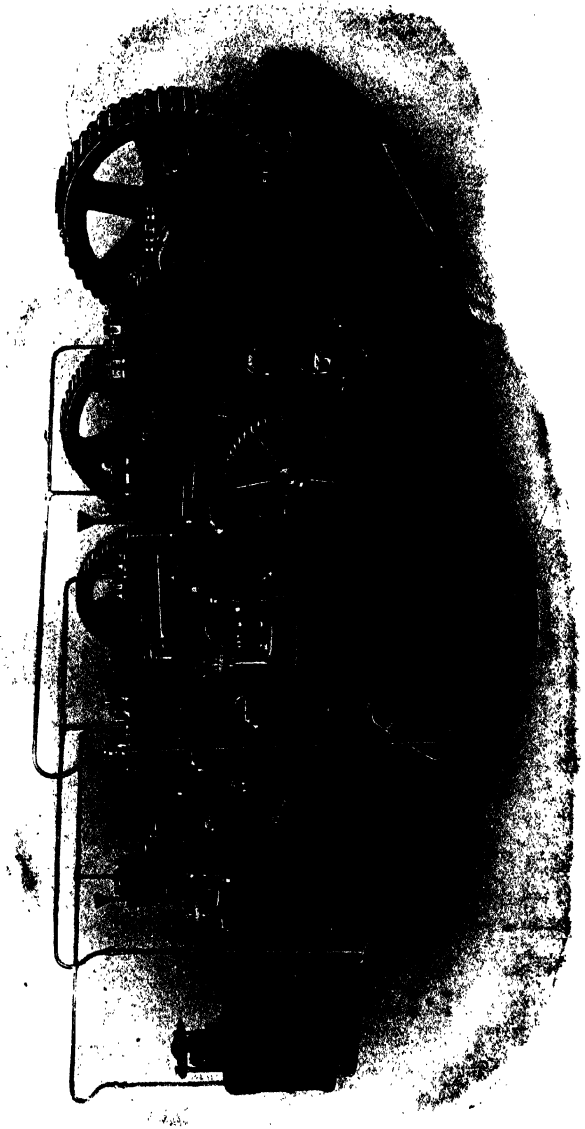

FIG. 87.—NINE-ROLL SUGAR MILLS.

theless, by them that where a single engine is driving three mills, the opportunities for undue strain being imparted to any one of them are very greatly increased, and therefore that the chances of breakdown are greater. It is also claimed, and many planters support this claim by their testimony, that where each mill has its own separate engine, it is possible to adjust the speeds of the mills, and to give them varying speeds, according to the quality of the cane passing through them, and to the conditions of the work being done, and that this facility for regulating the relative speeds of the mills between themselves is of considerable value in actual work. Where several mills are driven by one engine, the relative speeds of the rolls, once fixed, cannot be altered.

Where more than one mill is used, there are intermediate carriers to convey the crushed cane from one mill to the next, and between the last mill and the last but one the crushed cane is sprinkled with hot water.

The juice obtained by the last very severe pressure is associated with a larger proportion of gummy and other objectionable matter, and is more difficult to manufacture than the juice obtained by lighter crushing. In a very large factory, provided with treble crushing plant, it would be easy to keep the juice from the first mill separate from that from the second and third throughout all the processes of manufacture, though we have not heard of a factory in which this was done. In a factory of small or moderate size it would not be practicable.

When the cane is passed through several mills in succession not only is there a much larger extraction of the sugar contained in the cane, but there is also a large increase in the quantity of cane passed through mills of a given size.

Thus, a long way on towards twice as much cane is being passed through a set of three mills working in succession as would in the recent past have been passed through a single mill of the same size.

Even where three mills in succession are used, these are

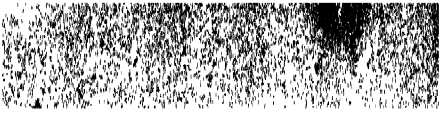

now almost always preceded by a pair of toothed or serrated rollers, the object of which is to break up the hard outer rind of the cane, and render the cane easier both to draw into the mill and to crush when passing between its rolls. Apparatus of this kind is called a "crusher"; several forms have become well known. The Krajewski crusher (p. 178), is a type of these. The results obtained vary with different districts and qualities of cane, and, no doubt, with the care used in working them. Some districts report that there is neither increase in quantity of cane passed through the mills, nor yet in the quantity of juice extracted; while in other cases consider-

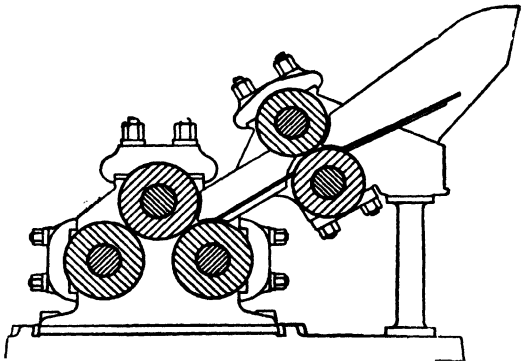

FIG. 88.—FIVE-ROLLER MILL.

able increase in quantity of cane crushed is reported and in some cases an increase also in percentage of juice extracted

Speaking generally, this apparatus is probably the least needed where the cane is straight and clean, and is delivered in orderly fashion on to the cane carriers; it is most valuable where the cane is bent and irregular in shape, and is delivere in a tangled mass on to the carriers.

In some cases, where only one mill is employed, five-roller mills, arranged as shown in Fig. 88, are made use of. The first two rollers, which are generally deeply grooved, extract little or no juice, but serve to break up the hard outer coating

of the cane, and deliver it to the other three rollers in a condition to yield its juice more readily. With such an arrangement all difficulty from the mill refusing to take its feed disappears, while the mill will crush a slightly larger quantity of cane and obtain a rather better percentage of juice from it than an ordinary three-roller mill would give.

The juice extracted by the mill is caught by the mill-bed, and thence flows to a collecting tank, where it passes through strainers to a pump, which raises it to the defecators. The object of the strainers is to keep back bits of crushed cane floating in the juice. The pump used should be provided with very accessible valves, as it is inconvenient to use strainers fine enough to keep back all the bits of crushed cane, and those which pass through may easily clog the valves, and, until removed, prevent the working of the pump. As the collecting tank used is, and ought to be, only small, this will very quickly necessitate the stopping of the mill.

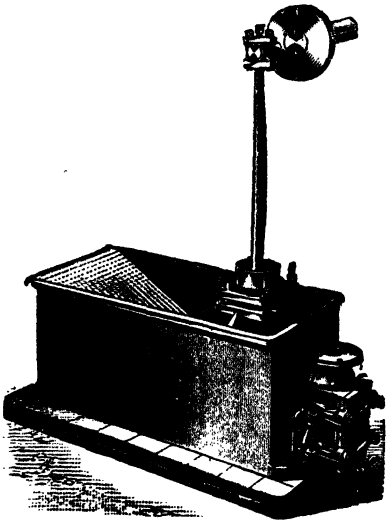

FIG. 89.—STRAINER AND JUICE PUMP.

Defecating Apparatus.—The juice as expressed from the cane is somewhat acid, and contains not only particles of cane, etc., suspended in it, but vegetable albumen and other matters dissolved in it. The object of defecation is to correct the acidity, and to remove the suspended material; also as much as possible of the colouring matter and of the dissolved materials other than sugar. The means employed to effect these ends are the addition of lime or other reagents and the

application of heat. These cause scum to be formed and to rise to the surface, and the dregs to be precipitated.

As cane juice at the temperature of the air very quickly ferments and deteriorates, it ought, immediately it has been expressed, to be pumped from the collecting tank already mentioned to the defecators, which are almost always placed at a high level.

On its way it usually passes through a juice-heater, so that its temperature may very quickly be raised to a point at which mischief from fermentation is no longer to be feared. This juice-heater consists of a cylinder having a tube plate secured at a little distance from each end. These tube plates are connected by tubes of copper or brass, through which the juice flows, steam being admitted to the interior of the cylinder surrounding the tubes.

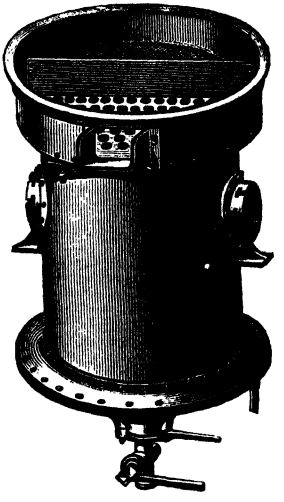

FIG. 90.—JUICE HEATER.

The heater is generally heated by steam from the exhaust main, into which all the engines discharge, and its heating surface is such that it raises the juice passing through it to a temperature of 180° F. or more.

Juice-heaters have sometimes been made heated, partially or entirely, with high-pressure steam, so that the juice in passing through them was raised to boiling point, and, indeed, was sometimes passed through under pressure, so that the temperature attained by the juice was considerably higher than the boiling-point under atmospheric pressure only. This method of combining juice heating with defecation has now become fairly frequent, and by many is preferred to any other means of heating and defecating the juice. Such heaters are now usually made in more than one compartment, and so

arranged that the juice flowing into the heater is partially heated by the juice issuing from it, which is thus reduced in temperature to below the boiling point, so that there is no flash of steam from it when it escapes from the heater. The whole of the heating in these cases is effected in the heaters, and the high temperature attained is intended to effect the coagulation of a larger proportion of the vegetable albumen present in the juice than is coagulated at a lower temperature. Juice thus treated needs to have milk of lime or other defecating agents added to it in the ordinary way, but does not need any further heating until the defecation has been completed.

In other cases the juice-heater is combined with multiple-effect evaporating apparatus in such a way that it condenses some of the vapour given off by the boiling juice. An economy both of steam and condensing water is effected by this arrangement, but the juice is heated much more slowly, and is not carried to nearly so high a temperature, unless indeed a second heater heated by exhaust or high pressure steam be added.

It is important that this apparatus should be so constructed that its heating surfaces can be readily and effectually cleaned without stopping the operation of passing and heating the juice.

The juice having been discharged into one of the defecators, of which there are several, has sufficient milk of lime added to it to neutralise, or very nearly neutralise, its acidity; and is then further raised in temperature until it throws up scum abundantly, which it does at somewhat below boiling-point. The application of heat is then stopped, and a little rest is allowed for the complete rise of the scum, and for the subsidence of the impurities of greater specific gravity than the juice. When the scum has risen and the impurities have settled, it is possible to draw off the clear juice to undergo further treatment, while the scum and impurities are collected and dealt with separately. Milk of lime is far from being the

only reagent employed in defecation, but it is the simplest, and is the system which is most widely distributed and most largely used ; and it has the advantage that it can be used without the control of a skilled chemist.

Defecators are made in many different forms. One of the the simplest is one in which a hemispherical bottom of copper is surrounded by a cast-iron steam jacket, and provided with cylindrical sides of brass or copper. These sides are sometimes (but not always) surrounded by a large gutter for the reception of the scum, which is in that case removed from the liquor within by skimming. When there is no scum gutter, the clear liquor is drawn off from below through a plug raised some little distance above the bottom of the defecator. The scum then settles down upon the dregs which have collected at the bottom ; and the plug having been withdrawn both flow away together to pass in to the scum blow-ups. Below the outlet from the defecator a two-way cock is provided by means of which the clear liquor and the scum and dregs are distributed to their respective destinations.

FIG. 91.—COIL CLARIFIER.

Another simple form of defecator consists of a cylindrical shell, having a slightly dished bottom, and provided internally with a copper heating coil. The outlet is from the centre of the dished bottom, and this form, like the other, may or may not be provided with a scum gutter.

Many other forms of defecator are in use, but probably the description of these two will be sufficient for the present purpose.

When the scum has been removed, the juice is sharply

boiled. This is sometimes done in the same vessel, and sometimes in one of similar construction termed an eliminator. This increase in temperature causes fresh scum to be thrown up which is removed by skimming.

After this process the juice either passes into subsiders where it remains at rest for several hours to permit the perfect subsidence of the dregs. When this has been effected, it is drawn off through arms supported by floats, so that all the clear liquor flows away before the dregs are reached—or preferably it is passed through one of the numerous forms of low pressure filter, the "head" used to force it through the filtering cloth being some 6 to 10 feet. A simple form of light and inexpensive filter press is frequently used for this purpose.

The object of this filtration is to detain the greater part of the impurities mechanically mingled with the juice.

The scum and dregs after passing into the scum blow-up receive a sharp boil, when the scum becomes thickened, and a quantity of juice separates, which is usually permitted to flow back into the tank which receives the juice from the mill. In many large factories the contents of scum blow-ups are forced into filter presses, which effect a much more complete separation of the scum from the juice than is possible by mere boiling and subsidence. The filter presses are often so constructed that the cakes of scum can be steamed and washed before being removed from the press. In this way the greater part of the sugar which they contain is extracted in the washing waters and waste is much reduced.

The defecated juice cleaned by subsidence or filtration may now pass into receiving tanks, and thence to the evaporating apparatus.

The cane juice having been rendered clear and limpid by the various processes of defecation, has now to be concentrated and boiled to grain. The necessary evaporation is conducted in two stages. Except in very small plants, the first

portion of the evaporation is conducted in some form of double, triple, or quadruple effect (p. 283); and in the larger plants, in which a large percentage of juice is extracted from the cane, whilst there is also an addition of a certain quantity of water, the apparatus chosen ought to be the quadruple effect inasmuch as the quantity of liquid to be evaporated in these cases is so great as to render it necessary to adopt the most economical methods of evaporating in order to avoid a heavy fuel bill.

In very small plants it is sometimes desirable to effect the preliminary evaporation in open steam pans (see p. 252), which may conveniently be surrounded by gutters to permit of skimming, and heated by multitubular steam drums which allow a great quantity of heating surface to be concentrated in a small space, so that the boiling is very rapid, and the time occupied in concentration is accordingly short. Or it may even be conducted in open fire-heated pans, so arranged as to permit the juice to be quickly concentrated and thoroughly cleaned.

This is best, not because these methods of evaporation are in themselves superior, but because in a very small plant the cost and complication of a multiple effect are out of proportion to the work to be done. For a somewhat similar reason in plants of a larger size, double effects are sometimes employed, though in this case the only advantage (as compared with a triple effect) is that they are rather less costly.

The aim and object of a multiple effect are two-fold. To evaporate the largest amount of water from the clear juice with the smallest expenditure of steam, and therefore of fuel; and to do this in such a way as to cause least injury to the juice. Both objects are attained by arranging a series of vessels, the first of which is heated by steam usually taken from the low pressure main of the sugar factory. Into this main the exhaust steam from the various engines used in the factory

flows (this steam being usually at a pressure of some 6 or 8 lb.); and in the last vessel of the series a good vacuum is maintained by causing the vapour evaporated in it to pass into a condenser in connection with a good vacuum pump.

The result of this arrangement is that the water vapour driven off in the first vessel is used for evaporating or boiling off a nearly equal amount of water in the second vessel; while the vapour given off in the second vessel in its turn boils off water in the third, and so on. The evaporation in each succeeding vessel of a multiple effect is slightly less than in the one preceding it, because of losses by radiation from the vessels themselves, etc. The effect of the arrangement is such, that while the vacuum in the first vessel is very slight, there is an increasingly good vacuum in each succeeding vessel. It may be taken as an axiom that one of these vessels—say the first—provided with a sufficient quantity of steam, and with as good a vacuum as that in the last vessel of the series, would do the whole of the work; but as, compared with a triple effect, it would do it with an expenditure of say nearly three times as much steam, and nearly three times as much condensing water; or as compared with a quadruple effect, it would do it with an expenditure of somewhere about three and a half times as much steam, and three and a half times as much condensing water.

A form of multiple effect which possesses many advantages is that in which the vessels of the effect are vertical, and the heating surface is contained in a multitubular drum suspended in each vessel, and capable of being removed from it without disturbing any of the piping connections or the body of the triple effect vessel itself, Fig. 92. As there is a space all around the drum where this arrangement is adopted, there is provision for very rapid and complete circulation of the liquor undergoing concentration, and such free circulation is essential to rapid and satisfactory evaporation. In a multiple effect the first vessel is usually heated by steam which is

admitted into it from the low pressure main of the factory. This steam has a pressure of some 6 or 8 lb. above the atmosphere. The second vessel is heated by the vapour from the first. The third vessel by the vapour evaporated by the second; and, if it be a quadruple effect, the fourth vessel by the vapour evaporated from the third. The vapour evaporated from the last vessel is passed into a condenser, and then to an air-pump, the best vacuum possible being obtained.

Sometimes on the way to the condenser the vapour from the last vessel passes through a juice-heater, imparting some of its heat to the juice, thus giving less work to the condenser and pump, and saving a portion of the steam required for heating the juice.

FIG. 92.—VACUUM PAN.

The juice almost always passes through the triple effect in the same direction as the steam; that is to say, it first passes into the first vessel of the apparatus—that which is heated by steam from the exhaust main, and passes on from that through the various vessels until the concentration is completed in the last vessel—the one in which there is the best vacuum. The vacuum in the various vessels varies, just as the pressure and temperature of steam heating each vessel varies. Thus the vacuum in the first vessel of the apparatus is only trifling; in the second vessel it becomes a good deal better; in the third vessel better still, and in the fourth vessel there should be a really good vacuum—say equal to 25 or 27 inches of mercury.

It is the general practice to pass the juice through this apparatus in the same direction as the steam, because when this is done the improved vacuum in each succeeding vessel enables the concentrated juice to be drawn from one vessel

into the other as required, whilst when the juice is passed through in the contrary direction, it needs to be pumped from each vessel into the next one.

Having the most concentrated juice in the vessel boiling under the best vacuum, but heated by vapour which is of very low tension, is in itself a disadvantage, because of the fact that the denser liquids in the later vessels of a multiple effect boil at a temperature considerably higher than that at which water would boil in the same vessels, so that, for instance, if the liquid in the second vessel of a multiple effect boils, say, at a temperature of 186° F., while the density of the liquid in this vessel is such that its boiling point is ten degrees higher than that of water, the vapour given off on boiling will have a temperature ten degrees below that of the boiling liquid, or say 186° F. less 10°, equals 176° F.; so that the steam heating the third vessel will have a temperature of only 176° F. Thus a portion of the margin of difference between the boiling points in the different vessels is rendered of no avail, and this is especially disadvantageous in the boiling of the denser and less mobile liquids. It is also a disadvantage because steam at the low tension existing in the heating drum of the last vessel of the multiple effect is not only low in tension, but low in weight per cubic foot, so that the given heating surface will not condense as great a weight of this low tension steam as it would do of steam at a higher density.

On account of these two reasons multiple effects have not infrequently been constructed with vessels varying in diameter, and having a larger amount of heating surface as they come nearer to the condenser and vacuum pump. There are, however, practical advantages in having all the vessels of the multiple effect of the same size; and as a matter of fact the differences of temperature in the various vessels distribute themselves so as to equalise the work done in each; the difference in temperature between the last vessel and the last but one being—where the vessels are of the same size—always

greater than that between the last but one and the one preceding it, and so on.

The heating surfaces of a triple effect are apt to become coated with lime or other solid material, deposited from the juice undergoing evaporation, and as this deposit very soon greatly reduces the evaporating power of the apparatus itself, it is necessary that it should be removed. This is usually done by passing scrapers through the tubes. Where multitubular drums, such as have been spoken about, are used, these can, if desired, be dropped out of the vessel which they heat, and be cleaned more perfectly outside. Indeed, if a spare drum be provided, one drum can be taken out and the spare one put in its place, when the apparatus can go on working after only a very short delay. The one which has been removed can then be cleaned at leisure so as to be ready when another drum needs to be taken out.

Occasionally wooden rods, either straight or spiral, have been inserted in the tubes of multiple effects, partly with the object of preventing or delaying incrustation by means of their vibration, and partly because they are stated in some instances to increase the evaporative effect of the apparatus. This result is said to be due to some extent to their presence reducing the quantity of liquid in the tube needing to be heated before evaporation can take place, and also by providing a surface along which the bubbles of steam can run upward.

In a variation of this arrangement of triple effect (Fig. 93), the cover of the triple effect vessel is bedded upon india-rubber, the vapour pipes being either admitted through the side of the vessel or also bedded upon rubber, while the drum stands upon a rubber seating in the centre of the bottom of the vessel. The steam or vapour is admitted to it in the centre of the bottom of the vessel through this central bottom opening. The drum is held down in its place by a single bolt, and if it be desired to remove the drum, the cover, which is simply laid upon the rubber and kept tight by its own

weight and the pressure of the atmosphere upon it, is lifted off, the single bolt holding down the drum is released, and the whole can be lifted over the top of the vessel to be cleaned. This arrangement, however, can be adopted only where there is sufficient room above the top of the apparatus to permit the

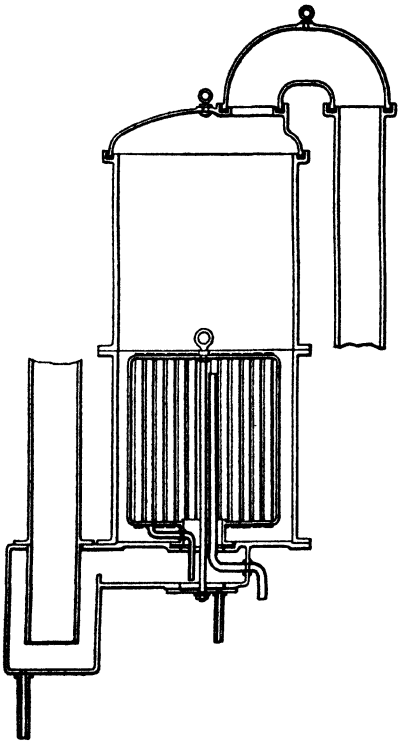

FIG. 93.—ALLIOTT AND PATON'S TRIPLE EFFECT.

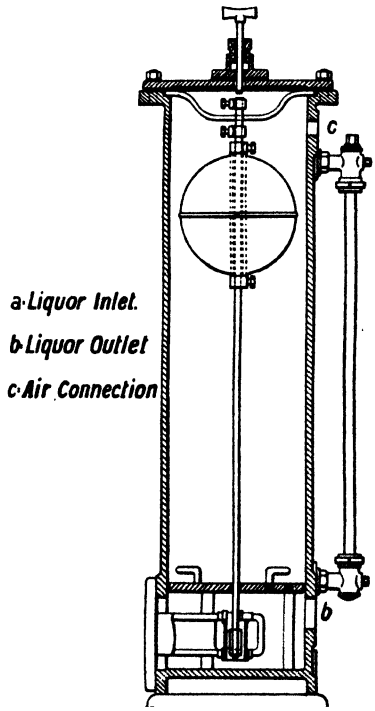

FIG. 94.—LIQUOR LEVEL CONTROL APPARATUS FOR MULTIPLE EFFECT.

lifting out of the drum over the top of the vessel, while still leaving the space required for the lifting apparatus employed in effecting this.

In most cases the flow of the liquid from one vessel of the multiple effect into the next is regulated by cocks, which are adjusted by hand to suit the flow required in each case

to replace the evaporation. In some cases, however, this flow is governed automatically by floats arranged in connection with each vessel of the apparatus, and these floats themselves control the flow of liquid, keeping the liquor in the vessels at a given height, Fig. 94.

The concentrated liquid is removed from the last vessel of the effect either by a *vide-jus* or by a pump. Where a pump is used for this purpose it is advantageous to place it as much below the level of the multiple effect as possible, and to make the pipe leading to it large; because it must be remembered that, inasmuch as there is a good vacuum in the vessel from which the liquid is being withdrawn, the pump in itself will have little power of suction; the vacuum which it can produce in its own barrel being not very much better than the vacuum in the vessel of the multiple effect. A poor or badly arranged pump used for this purpose is sure to give trouble, and cause annoyance.

The various vessels of a multiple effect have usually a small pipe connection to the condenser or to the vapour piping leading to or beyond it. These pipes, which are provided with cocks or valves so that they can be shut off, are usually termed "ammonia pipes." They are used to withdraw the air from these vessels when the apparatus is being started, and from time to time they are opened, should it be suspected that air or gas of any kind is collecting.

The condensed water from the heating surface of the first vessel of the multiple effect will run off readily through an ordinary trap, because the steam heating this drum is above atmospheric pressure; but this is not the case with the condensed water in the drums of the other vessels of the multiple effect. The water in these needs to be taken away by means of a pump, and sometimes this condensed water is drawn away into the vacuum pump. To do this, however, is undesirable, as the heated water decreases the efficiency of the pump.

In some cases the condensed water from the drums of the

multiple effect is taken out by suitable drainers, often termed calandria drainers. Such a drainer is represented in the accompanying figure (Fig. 95), which shows such a drainer as might be attached to the second and third drums of a triple effect.

The condensed water is introduced into this apparatus, which consists of a box divided into two compartments, communicating with one another by means of a valve regulated by a float. The first compartment receives the condensed water from the drum of the second vessel of the triple effect, and when there is sufficient water in the box to lift the float, and therefore open the valve, this flows into the second compartment. Any steam which it may give off on coming into the better vacuum of the second compartment passes up the pipe through which the condensed water from the drum of the third vessel of the triple effect enters the second compartment of the drainer, and is made use of in heating that drum.

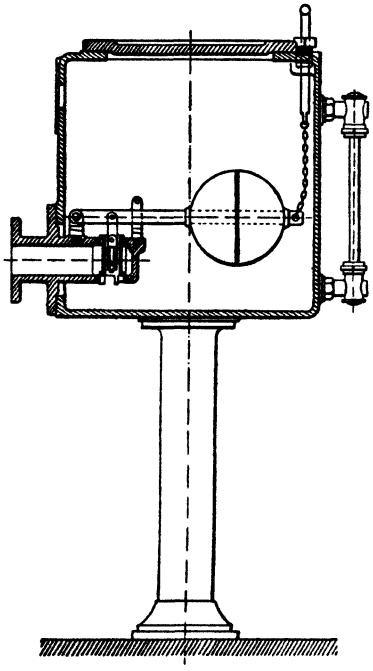

FIG. 95.—CALANDRIA DRAINER.

The second compartment of the box is in communication with the pump, by means of which the water is extracted.

The exhaust to the pump may, if desired, be controlled by a float in the same way as the communication between the two compartments of the box.

A glass water-gauge attached to each compartment of the

box gives the opportunity to observe the quantity of water contained in each compartment, and thus to know that the apparatus is acting properly. Arrangements are made for lifting the floats and valves by hand to ensure that they are in working order.

Recently some owners of sugar factories have introduced filters into the connections between the various vessels of the multiple effect, so that the juice is filtered in its passage from one vessel to the next. The filtration has usually been through sand, and in many instances the "Standard" sand filter has been used for this purpose.

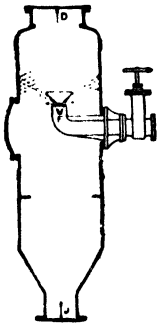

FIG. 96.—JET CONDENSER, WITH CONICAL SPRAY.

D, Vapour inlet ; J, Connection to vacuum pan.

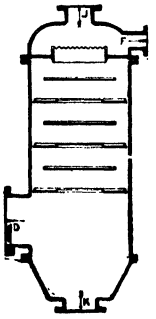

FIG. 97.—JET CONDENSER. "COUNTER-CURRENT" TYPE.

D, Vapour inlet ; J, Connection to vacuum pump ; F, Water inlet ; K, Connection to Torricellian tube.

The condensers used in connection with triple effects are almost invariably of the jet condenser type, and as a rule the condensing water passes through the vacuum pump. In some factories, however, the condenser is raised to such a height that the water can flow away through a Torricellian tube, in which case the vacuum pump only has the air or vapour to deal with. There are obvious advantages in the use of the Torricellian tube, where this is possible, (1) because when the condensing water passes through the pump it occupies a considerable portion of the space contained in it, and to that

extent diminishes its capacity; and (2) because there is a tendency for the warm condensing water on entering the somewhat more perfect vacuum of the pump to give off vapour, which again decreases the ability of the vacuum pump to take air and vapour from the vapour pipe. Besides, where a vacuum pump, working with a plunger under water, is employed, the waste of water which constantly takes place may be made good, where a Torricellian tube is used, by means of a small jet of cold water, which will form a small supplementary condenser within the pump itself, and insure that the pump gets a complete charge of air and vapour.

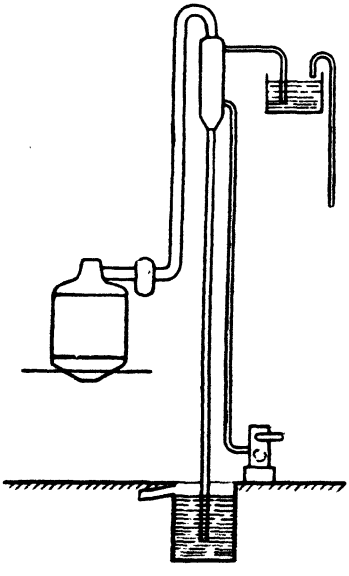

FIG. 98.—GENERAL ARRANGEMENT OF VACUUM PAN AND TORRICELLIAN TUBE.

Many types of vacuum pump have been devised; but that most suitable for a tropical sugar factory appears to be the one in which a horizontal plunger works entirely covered with water, and by its movements causes the water to withdraw itself to a considerable distance from the valves, leaving a large space for vapour, and then to return and fill the whole space, forcing the air before it through the valves. One great advantage possessed by a pump of this type for use in the tropics is that, if the working plunger, or the barrel in which it works, becomes scored or worn, the leakage which takes place is a leakage of water only, and must become very large indeed before it appreciably affects the working capacity of the pump. The valves likewise are not likely to become so injured as to diminish the working

capacity, and they can very easily and quickly be got at for examination or replacement; indeed the whole pump is easy to erect, easy to get at and easy to repair.

Dry vacuum pumps—that is to say pumps containing no liquid at all—have been introduced in many European countries, and have given good results; but their good working is dependent upon there being very small clearances at each end of the working cylinder, very small spaces in the ports, and upon the piston and valves—which are usually slide-valves somewhat like those of a steam engine—continuing to be tight. Any wear and tear of the piston, and any scoring of the cylinder, will produce a leakage, not of water, but of air; and that leakage will become greatest when the pressure of the air is increased just before the discharge point of the pump.

In like manner, any wear or scoring of the valves will cause a similar leakage of air with similar disastrous results. This type of pump doubtless possesses advantages where it is close to large workshops, and under the superintendence of skilled workmen, but these conditions do not usually prevail in a tropical sugar factory, and in the tropics at any rate its advantages are likely to be much more than counterbalanced by the disadvantages.

Vacuum-Pans.—The condensed juice on leaving the triple effect (usually at a density of 25° or 26° Baumé), even although it may appear to be clear, still contains a certain amount of vegetable albumen, which the temperature of boiling in the ordinary process of defecation was insufficient to coagulate. It should therefore be passed into eliminators (of similar construction to those already mentioned in connection with the process of defecation), where it receives a sharp boil.

The higher temperature at which the concentrated juice boils, as compared with the juice coming direct from the cane, is sufficient to coagulate the remaining portion of the vegetable albumen which comes away as scum.

The juice is in many cases again passed through low-pressure filters, and being then ready to pass into the vacuum-

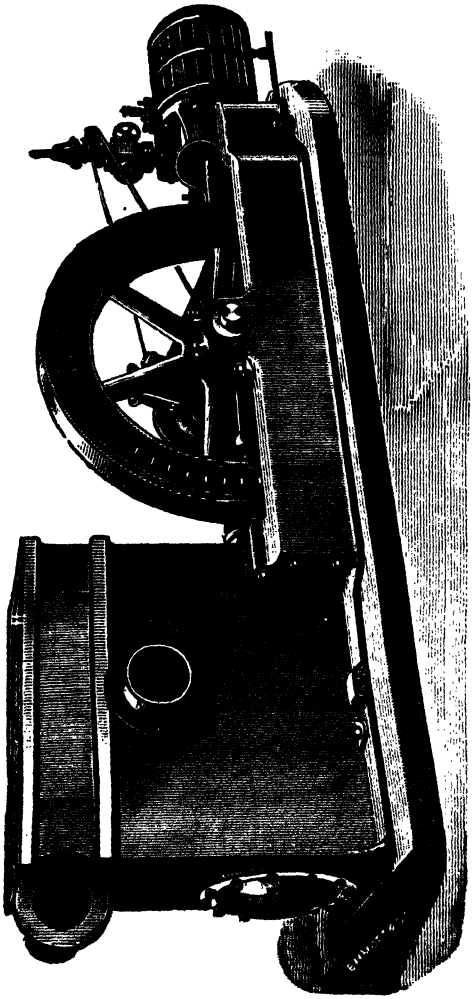

FIG. 99.—VACUUM PUMP.

pan is discharged into the vacuum-pan supply tanks, from which it is sucked into the vacuum-pan as needed.

The vacuum-pan ordinarily used in a tropical sugar factory

is a cast-iron vessel having a domed top, a cylindrical body, and a conical bottom, terminating in a large discharge-valve. Out of the domed top proceeds a vapour-pipe of large diameter by means of which the vacuum-pan is connected with the condenser and vacuum pump. In some part of this vapour-pipe there is arranged a saveall—a vessel in which any liquid drawn over with the vapour is baffled and caused to fall to the bottom of the saveall, whence it is drawn back into the vacuum-pan (Fig. 100).

The vacuum-pan itself is fitted with manhole, sight-glasses, vacuum gauge, proof-stick, etc., and it is heated usually by

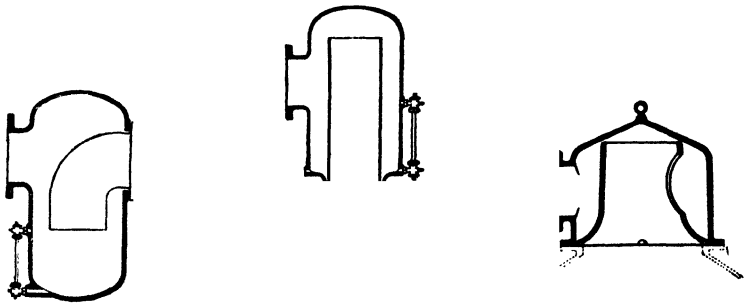

FIG. 100.—SAVE-ALL FOR VACUUM PANS.

copper worms, varying in number according to the arrangement of the pan and the quantity of heating surface required.

The object of the vacuum-pan is to boil the condensed juice drawn into it into sugar-crystals. A considerable amount of knowledge and skill is needed to do this in such a way as to produce crystals of the character and size required, and to keep these crystals of uniform size. The value of sugar is decreased when the crystals are some of them large and some small.

The time during which the liquid must remain in the vacuum-pan and undergo boiling varies with the size of

crystal required. If large crystals are required, the juice must remain in the pan a long time, because large crystals are things of slow growth, and are formed by the gradual introduction of more concentrated juice into the pan. When the concentrated juice is drawn in in proper quantities, the sugar it contains is not deposited in the form of small fresh crystals, but, as evaporation goes on, it builds up the crystals already contained in the pan, so that these go on steadily increasing in size. The growth of the crystals is affected by the temperature at which the pan is boiling, as well as by the rapidity of the evaporation. The temperature depends upon the degree of the vacuum; the rapidity of boiling upon the heat in the copper worms. By manipulating the vacuum and the temperature, the operation of the pan can be so regulated as to produce the type of sugar which may be required.

The heating worms of the pan are usually connected both with the low-pressure or exhaust main of the factory, and also with the high-pressure steam main, so that each particular worm can be heated either by the one or the other as may be desired.

The construction of the pan itself is to some extent dependent upon the character of the sugar it is desired to produce. If small crystals are wished for, a large amount of heating surface may be crowded into the pan, so that evaporation shall take place more rapidly; but, if large crystals are desired, a much smaller amount of heating surface will suffice, as the evaporation in such a case must be conducted slowly.

The most difficult part of the boiling to grain in the vacuum-pan is the first formation of the grain in the syrup undergoing concentration. Processes have recently been introduced by which suitable grain is prepared altogether outside the vacuum-pan itself, and a proper quantity of it introduced into the pan before the formation of grain in the pan itself has commenced. The use of these processes con-

siderably simplifies the production of crystals of the desired type.

For many years the tendency was to boil the sugar in the pan, so that the contents of the pan contained the smallest possible amount of moisture. This resulted in the massecuite contained in the pan becoming at the end of the boiling very stiff and sluggish in movement; and accordingly pans were constructed with outlet valves 2 feet and 2 feet 6 inches in diameter, and sometimes even of larger dimensions still. Of late years, however, it has become not unusual when the condensation of the contents of the pan has been carried as far as practicable, to add syrups from former boilings, which are so far charged with sugar that they will not dissolve any of the sugar already formed into crystals, but of such a consistency that the contents of the pan become much more liquid and easy to manipulate.

The condenser and vacuum pump connected with the vacuum-pan must be of ample size, so as to secure the possibility of obtaining as good a vacuum as may be desired. The condenser is practically invariably of the injection type, and the remarks already made with reference to the condensers of multiple effects, and the vacuum pumps employed for operating these, apply with equal force to the condensers and vacuum pumps used with vacuum-pans. It must be remembered that in the tropics the condensing water is of very much higher temperature than in England, and consequently arrangements must be made for using a very much larger quantity of it, both condensers and vacuum pumps being of a size which would be absurdly large if employed in this country.

When the boiling to grain in the vacuum-pan is complete, its contents may be treated in several different ways. The mass may be discharged direct from the pan into crystallisers in motion, but this is rarely done in tropical factories; or, it may be discharged into crystallisers either fixed or movable,

in which it remains at rest before passing on to the centrifugals; or, it may be discharged into mixers arranged immediately above the centrifugal machines.

In most modern factories, the massecuite for the first sugars is passed directly into the mixer immediately above the centrifugal machines, and centrifugaled at once, while the massecuite for second sugars may most advantageously be treated in crystallisers in motion, Fig. 101.

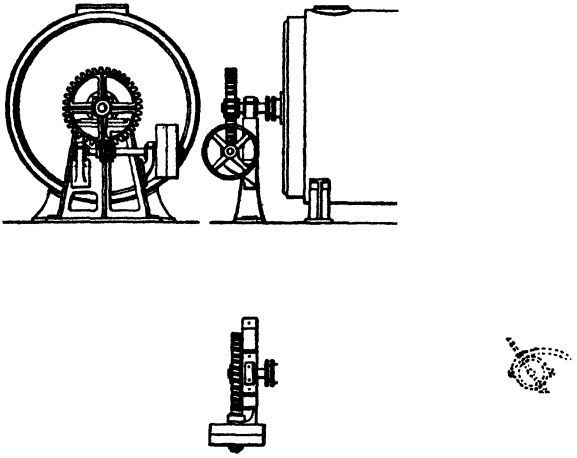

FIG. 101.—CYLINDRICAL JACKETED CRYSTALLISER.

The use of this apparatus on a considerable scale is of quite recent introduction. When the massecuite has passed into these, it may, if necessary, be thinned to a certain extent by the introduction of saturated syrup into it, as already described. The crystalliser in motion is so arranged that it can be heated by steam heat, or cooled by water, as may be desired, and the crystals in the massecuite are kept free to move either by the movement of the crystalliser itself, or by the slow rotation of a worm, or by some other form of agitator moving through the contents of the crystalliser. The massecuite, when introduced into such a crystalliser, is retained in it

until practically all the crystallisable sugar, which can be separated from the glucose and other contents of the molasses, has been deposited upon the crystals contained in the massecuite.

This usually occupies somewhere about three days; it may be somewhat more or somewhat less, according to special circumstances.

Where crystallisation in motion is thus employed, the molasses which is separated from the crystals of the massecuite in the centrifugals is so far exhausted of crystallisable sugar that no further crop of crystals can be obtained by further concentration.

When the contents of crystallisers in motion are ready to be centrifugaled, they may either be discharged through a large valve into a gutter or shoot along which they flow into the mixer above the centrifugals, or they may be led into a massecuite pump of suitable construction, which will pump them up into this mixer; or, they may be discharged into wagons of suitable size, in which they may be conveyed to it; or, the crystalliser itself may be so constructed that it can be hermetically closed at the top, and its contents may be forced out through a valve and pipe of suitable diameter by means of compressed air admitted above the massecuite within the crystalliser, and thus forced without any hand labour (save that of opening and closing valves) into the mixer.

When the contents of the vacuum-pan are discharged into ordinary crystallisers, such as were in general use previous to the introduction of crystallisation in motion, they may remain in these for a period of probably a day. During this time a portion of the crystallisable sugar contained in the molasses is deposited upon the crystals, so that they grow in size. The sugar from such crystallisers is dug out, and passed into some form of pug mill, where the somewhat hard mass into which it has set is broken up, and the crystals become loosened and

free to separate themselves from the molasses in which they are enveloped. After passing through the pug mill they go into the mixer from which they are discharged into the centrifugals.

If the massecuite is to be passed into crystallising tanks, as described above, the boiling must not be carried to the farthest point possible, as in that case the sugary mass would set hard in the tanks and be exceedingly difficult to remove from them.

Whether treated in crystallisers in motion or in the older form of crystalliser, or whether discharged direct from the vacuum-pan, in any case the massecuite eventually finds its way into the mixer above the centrifugals. This mixer is usually a large trough provided with a central revolving shaft, carrying arms or stirrers by means of which its contents are kept in motion, and sometimes are assisted to flow from one part of the mixer to another.

The mixer usually runs from end to end of a row of centrifugals, and is provided with a valve above each centrifugal, by means of which the massecuite can be admitted into the centrifugal, in which the sugar crystals are separated from the molasses.

The centrifugals most generally used in modern sugar factories are either of the Weston or of the Hepworth suspended type. Either of these can be run at a high speed of revolution without too great an absorption of power, and they are both constructed so that their contents can be discharged from the bottom of the machine either into a small wagon of such size as to receive the contents of one machine, or upon a travelling belt which will carry the sugar direct to the sugar store.

There are, however, many places where other types of centrifugal machines are in use. In some countries for instance, the old top-driven type is almost universally em-

ployed, and is frequently used in connection with special steaming arrangements, which enable the crystals undergoing treatment in the centrifugal to be very thoroughly washed and whitened by steam before they are discharged from the machine.

The centrifugals may either be driven from shafting, which is usually actuated by its own separate engine, or they may be driven by means of water, or by means of electricity. Electric motors are, however, less suitable for driving centrifugal machines than for many other purposes to which they are applied. It is rare to find a centrifugal machine supplied with an electric motor capable of bringing the centrifugal basket with its contents of sugar up to its full speed within a reasonable time ; and this slowness of arriving at the speed required is a very great drawback to the efficiency of the arrangement, when fine sugars, which are ready to be discharged almost as soon as the machine has reached its proper speed, are being treated.

Owing to the recent development of electric power, its use in connection with centrifugals is becoming general.

Where the massecuite has either been passed direct into the mixers above the centrifugals, or has only passed into ordinary crystallisers, the molasses flowing away from the centrifugals will be retained, passed again into the vacuum-pan and re-boiled to make second sugar. The massecuite for this second sugar would either pass again into ordinary crystallisers in which it would remain for four or five days or a week, while the crystallisable sugar contained in it was crystallising out, when it would be passed again through the pug mill, the mixer, and the centrifugals ; or it would be passed into the crystallisers in motion where the desired object of the extraction of the remaining crystallisable sugar would be effected in some three or four days.

The sugar discharged from the centrifugals usually under-

goes a little preliminary drying and cooling, and is then ready to be packed for transport, or for sale. The drying and cooling is often effected by spreading the sugar out, either upon the floor or in the sun ; but in other cases it is passed through a Newhall or Hersey Granulator or some other form of rotary sugar dryer (see p. 641), where it is thoroughly dried without manual labour, and where it may also be cooled.

It is, of course, desirable to transport the sugar from the centrifugals either to the granulator (or rotary dryer), or to the floor where it is to be spread out, with the least amount of manual labour, and consequently travelling bands, or other means of mechanical transport, are usually arranged below the centrifugals, and by means of these the sugar is carried to its destination automatically.

Where more than one class of sugar is made, centrifugals are often arranged in groups, each treating a different class of sugar, and delivering it to a particular destination of its own, so that the various classes are easily and readily kept separate.

Where there is only a single row of centrifugals, it is practicable sometimes even then to arrange two conveyors, each transporting one class of sugar and delivering it to the spot at which it is wanted. The disadvantage of using the same belt, or mechanical conveyor for two classes of sugar is that there is liable to be some admixture of the lower class of crystals, with the higher class sugar, and also that more care is needed in keeping the different classes of sugar entirely separate in the store and when packing.

The various sections of the factory have now been dealt with with the exception of the steam generators. It has already been stated that so long as the steam which passed through the engines, was required afterwards for heating or for evaporating, it was not of such great importance whether the engines were specially economical in the use of steam, as it would be in cases where the steam was generated for the special purpose

of being converted into power in the engines and for that purpose only.

The same consideration to some extent affects the choice of the steam generators, and the pressure at which they usually work, and renders it desirable to retain the somewhat low pressures which have long been banished from such places, for instance, as an electric power house.

In a tropical sugar factory, there are very considerable lengths of steam piping, with many connections to engines, defecators, eliminators, heaters, evaporating apparatus, etc., and thus there are many opportunities for piping to give trouble through imperfect joints, expansion not sufficiently allowed for, etc. All these difficulties become greater where high pressures are used than where low ones are employed, and many a man can efficiently erect steam piping and make sound joints when steam of 60 or 70 lb. pressure is used, who could not satisfactorily erect a range of piping to carry steam at 120 or 150 lb. pressure.

For these reasons, therefore, namely, that there is no economy in fuel in a sugar factory in using very high pressure, and the high pressures are likely to give more trouble through leaky joints, etc., whilst the crop is being taken off, the pressures which may most advantageously be worked with in a tropical sugar factory are usually somewhere from 60 to 80 lb.

Many different types of boilers are employed, and indeed each district has usually a fashion of its own in this particular matter. Multitubular boilers of one type or other are in very extensive use, sometimes in the form of the elephant boiler, the design of which originally emanated from France, and sometimes in other forms.

Where these boilers are employed, the flame is usually carried first under the bottom of the boiler, then back through the tubes, and thence to the chimney. In many cases, the tubes used in these boilers are of the Behrendorff removable type, which permits the tubes to be removed from the boiler

at the end of each crop and thoroughly cleaned, and then put back again in their places to go on working for the next crop.

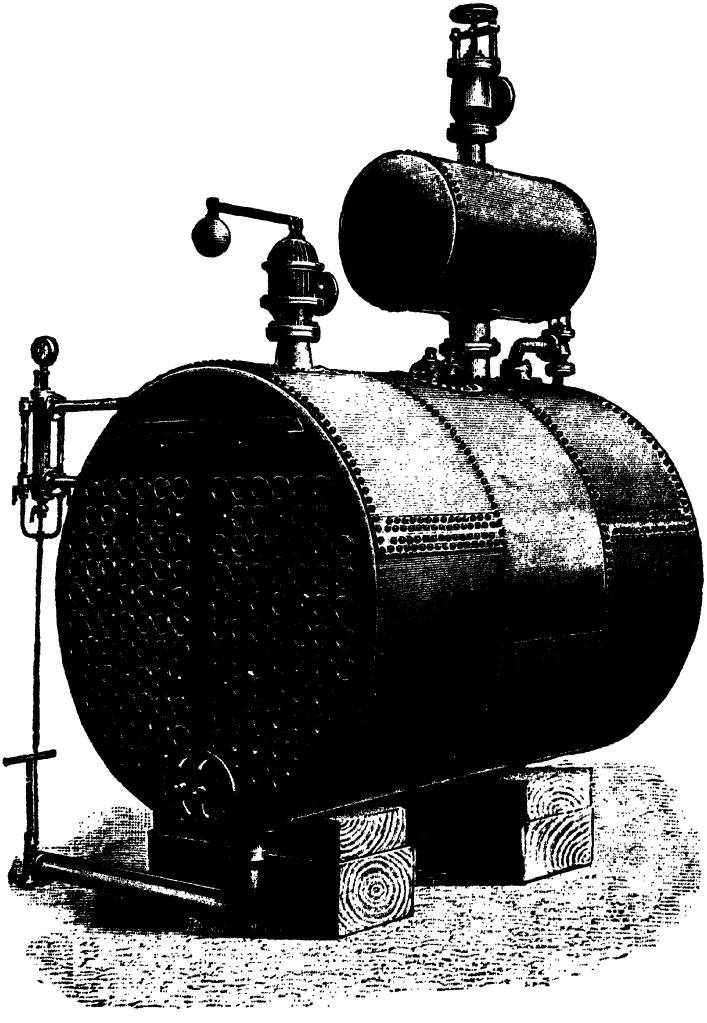

FIG. 102.—MULTITUBULAR BOILER.

At one time the semi-portable type of boiler was largely in use in French tropical factories, each boiler having its

own iron chimney, but this arrangement had many disadvantages.

Lancashire boilers and Galloway boilers have also been frequently employed, and would have come much more largely into use, but for the fact that they are exceedingly cumbersome and costly to ship.

The chief requisite for a boiler installation for a tropical factory is that it shall burn the megass coming directly from the mill, well and economically, and that it shall obtain as large a percentage of work from this megass as it is capable of giving. If the necessary heat is once generated in the furnace, there are many boilers which are capable of absorbing it and using it for the production of steam, and which of these shall be chosen depends often upon such conditions as the quality of water, the ease or difficulty of transport, and the amount of skill available for superintending the working and for effecting any necessary repairs.

It may be stated generally that water tube boilers, as ordinarily made, are not very suitable for a sugar factory, because these boilers are usually intended to work at high pressures, and if they should be worked with steam at the comparatively low pressures mentioned, the space occupied by the low pressure steam is such that it is likely to carry over much water with it out of the boiler, so that there would be undue priming, while the lower tubes would quickly burn out.

Again it may be stated as a general rule that wherever the water is of such a kind as to deposit lime or other impurities quickly and heavily upon the heating surfaces, a type of boiler should be adopted which it is easy to thoroughly clean and scale.

These observations it will be seen go rather in the direction of indicating the qualities which it is desired to have, and those which it is desirable to avoid, rather than in the direction of indicating any particular make of boiler.

Of late years some of the American types of vertical boiler with coils of fire-heated tubes have come a great deal into use,

and much has been said as to their efficiency. It would appear, however, from their construction that with bad water the tubes would be likely to suffer from the deposit of scale, and might easily give trouble either by the joints becoming leaky or by the tubes burning out. They possess certain advantages as a set-off against this, such as the fact that no brickwork setting is necessary, and the space occupied is comparatively small; but it is at least doubtful whether these advantages compensate for the disadvantages spoken of, and for the further disadvantage that they hold but a comparatively small quantity of water, and therefore have a comparatively small reserve of steam when called upon to supply suddenly a considerable quantity—a thing which happens not infrequently in a sugar factory.

With regard to megass furnaces, one of the earlier furnaces, designed and proved effective for burning megass direct from the mill, was the "Marie" furnace, which was extensively used in French central factories, frequently in combination with the semi-portable boilers already spoken of, and which also came to some extent into use in English sugar factories. Other furnaces of American design also came early into the field. Then the step grate has proved itself able to burn undried megass efficiently. This is usually made semicircular in shape. A form of furnace which has proved thoroughly satisfactory is one in which the megass is permitted to fall through an opening in or near the top of the furnace on to inclined grate bars. The combustion in a furnace of this type is both rapid and thorough, while the clinker resulting from the silicious outer coating of the cane can easily be sliced off the inclined bars, and permitted to fall through an opening at their lower end, when it is withdrawn entirely from the furnace.

In some factories the air supply to such furnaces is warmed by passing through iron tubes, which are arranged in the flue leading to the chimney.

It is not unusual for the megass to be carried from the mills and delivered into the furnaces without being touched at all by hand, Fig. 102. Arrangements have been made for opening the furnaces automatically so that the megass coming from the mill falls for a certain length of time into one furnace, then for an equal length of time into the next, and so on throughout the number of furnaces which may be in operation. Such an arrangement as this, however, does not usually permit sufficient elasticity in adjusting the supply of megass to each furnace according to its wants, and therefore it is better

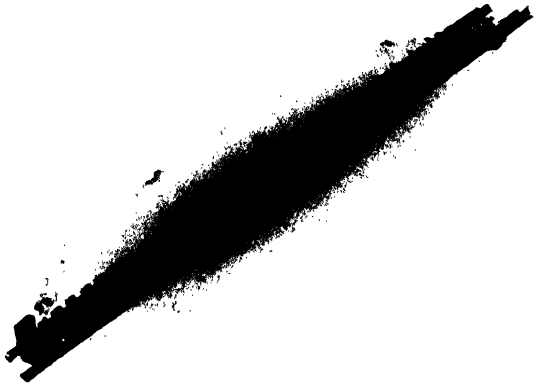

FIG. 102.—BEGASS ELEVATOR.

to open each furnace by hand to receive the quantity of megass which it may need, and then to close it and open the next.

In arrangements such as this, it is desirable to provide for the reception of the megass which may not at the moment be needed.

This may readily be received in a cart, which may be removed when full, and may be kept for use at any period when the supply of megass from the mill may fall short. Even where a factory is being worked continuously throughout the 24 hours, it usually stops work from Saturday till Monday, and both when stopping work and when starting in the morning a certain quantity of megass or other fuel is neces-

sary which cannot be obtained direct from the mill. This is needed, when starting work, for getting up steam for the purpose of starting the mills, and when stopping work it is needed for finishing the treatment of the juice which has been expressed from the last cane passed through the mills, and which either must be worked up into sugar, as at the end of a crop, or if the stoppage is only for a short time, must, at any rate, be defecated and so far concentrated as not to be liable to fermentation. There is, therefore, always a use for any surplus megass which may at the moment not be required for the furnaces.

The automatic delivery of the megass into the furnaces is comparatively rare, the course usually pursued being to deliver the megass either on to the top of the furnaces, which are provided with hoppers through which the megass is pushed, or on to a platform immediately in front of the furnace mouth situated near the upper part of the front wall of the furnace. It is thus easily pushed through the furnace mouth by hand, and the furnace mouth itself is often kept closed by forcing a quantity of megass into it. The megass thus closing it becomes to some extent dried before, in its turn, it is pushed forward to feed the furnace.

From the foregoing general description of the arrangements of a modern tropical sugar factory it will be seen that these depend upon the size of the factory, and upon local conditions. It is not possible to arrange any plan for a tropical sugar factory, and to say: this is the best arrangement everywhere and under all conditions.

As far as is practicable without distinct injury to the working of the factory, it is well to put in, for the various purposes, apparatus of a general type well known in the district; because when this is done, the workpeople know how to work and adjust the apparatus properly, and are not likely to spoil either the apparatus itself or the material being treated in it by stupid mistakes in manipulation.

Then the cost of extraneous fuel may sometimes limit the extent to which it is desirable to increase the amount of sugar obtained from the cane by adding water to the megass before the last crushing. Here again, the question of whether the sugar is being produced to compete in the market of the world, or whether it is being produced for a protected market may to a considerable extent affect the question of plant. Thus, in the Sandwich Islands, the sugar from which enters into the United States free of duty it is usual for much more water to be added to the megass than is used elsewhere; the amount of added water being sometimes as much as 35 or even 40 per cent. The additional percentage of sugar obtained by this large addition of water is not very great, but the fact that when made it can, without having paid any duty, be sold in a market protected by a very high duty, may perhaps justify the considerable expenditure which is necessary in order to obtain it.

In producing sugar in the tropics, as indeed in every other business transaction, it is necessary to take into account all the local surroundings, such as, cost of the cane delivered to the mill, the percentage of sugar contained in the cane, the quality and cost of labour and of fuel, the abundance or scarcity of water, the length of crop time, and whether or not it is the custom to work by night and day, or by day only. All these matters must be considered, as they affect the owner of a sugar estate or of a sugar factory, and they ought all to be taken into account when deciding what plant shall be put in for the manufacture of sugar.

A Small Model Factory.—Plate VII. is a plan of a comparatively small sugar factory, capable of producing some 15 to 20 tons of sugar per day of 24 hours. The arrangements shown would be subject in any particular case to alteration which might be rendered desirable by local conditions, while some of the arrangements would be modified in plants of larger capacity.

The arrangements shown, however, represent substantially a plant which has been actually supplied and found satisfactory for the duty mentioned.

In this plant, the cane is brought alongside the cane carrier A in wagons, which are afterwards removed on to a turn-table or traverser, and go back upon another set of rails so as not to interfere with the onward progress of the cars actually loaded with cane.

The cane is delivered by the cane carrier into the first mill B of a series of three mills, and with the assistance of the intermediate carriers E it passes forward from the first to the second mill B^2, and from the second mill to the third mill F, when the crushed cane is delivered to the megass elevator, which in its turn delivers the megass immediately in front of the boilers J. The mouths of the furnace of these boilers are on a level with the platform on to which the megass falls, so that the megass may be simply pushed through them, and does not need to be lifted.

The pressure exerted by the mills upon the cane passing through them is regulated by hydraulic attachments to the top bearings of each mill, the hydraulic power being supplied from the accumulator P^1, which is pumped up when necessary by means of the hydraulic pump Q^1.

On its way from the second mill B^2 to the third mill, the megass is sprinkled with hot water, the quantity of this being usually some 14 or 15 per cent. of the original weight of the cane, and thus the moisture left in the cane, after the last crushing is not pure cane juice, but only the cane juice diluted by more than its own weight of water, the quantity of sugar left in the megass being considerably reduced.

The sugar mills are shown, each driven by its own independent engine and gearing, an arrangement which possesses various advantages over the use of a single engine for driving two or three different mills.

The juice, together with the proportion of the water added

to it passes away from the mills to the raw juice tank K, in which are fixed strainers, which enable the major part of the megass and other solid matters which may be mingled with it to be removed before it is pumped up to the clarifiers.

From the juice tank the juice is raised by the raw juice pump L to the juice-heater M, which in this case forms a preliminary condenser for the quadruple effect, a portion of the vapour given off in the last pan of the quadruple effect being condensed in the juice-heater, while the rest of it passes on to the ordinary condenser.

From the juice-heater the juice passes into the clarifiers P, where it is neutralised by the addition of lime and is clarified. N and O represent a lime mixer and lime tank for the preparation of suitable lime-water to be added to the clarifiers for the purpose of promoting the thorough clarification of the juice.

After clarification, the juice is passed through the filters Q Q into the quadruple effect supply tanks R, while the scum and dregs from the clarifiers pass into the scum blow-up Y^1, and then into the *monte-jus* Z^1, by means of which they are forced into the filter presses A″, A″, where the liquid portion is separated as completely as possible from the solids, and is permitted to mingle with the juice from the mill and to pass thence again into the clarifiers.

From the quadruple effect supply tanks the juice is naturally drawn into the quadruple effect, where the major portion of the evaporation is effected, the arrangements for the working of the quadruple effect being rendered as automatic as possible, while the vacuum is maintained by the assistance of the condenser and of the vacuum pump T.

The juice is withdrawn from the quadruple effect by means of the pump U, and is passed into the eliminators V V, where it receives a sharp boil, and a further portion of scum and impurities is removed.

From the eliminators it passes through the syrup filter W, or through the filter I^1, which however is principally used for

filtered molasses, to the vacuum-pan supply tanks X X X, or to J^1, if this tank is not being used for molasses, and from these it is drawn into one or other of the vacuum-pans Y or K^1, the vacuum in which is maintained by their condensers and by the vacuum pumps Z and L^1. In these vacuum-pans it is boiled to grain, and may be discharged either into the mixers A^1 A^1 above the sets of centrifugals B^1 B^1, or it may be discharged into the crystallisers in motion M^1 M^1, which are kept in motion by means of the engine N^1.

When the crystallisation of the massecuite has been completed in these crystallisers in motion, their contents are forced by means of compressed air, provided by the air compressor O^1 from the crystallisers into the mixers above the centrifugals.

From the mixers the sugar passes by means of suitable valves into the centrifugals (driven by the engine C^1) where the molasses is separated from the crystal sugar, and flows away into the molasses tank F^1; while the sugar itself is discharged on to conveyors and eventually delivered to the elevators E^1, which deliver it into the sugar store. G^1 is a rotary pump, by means of which the molasses is pumped from the molasses tank F^1 to the molasses blow-up H^1, where the molasses is blown up and heated, and then delivered to the molasses filter I^1, which removes any solid impurities. From this filter it passes away to the vacuum-pan supply tank J^1. From this it is drawn into the vacuum-pan specially arranged for the treatment of second sugar, which in this case is the pan figured K^1 (though of course this pan is also used for boiling first sugar).

R^1 and S^1 are the hot and cold water tanks, while T^1 T^1 are donkey pumps connected with these two tanks and supplying water for the general purposes of the factory. U^1 is the boiler feed pump, and V^1 is the exhaust steam receiver.

W^1 is a melting tank, or sugar blow-up, enabling low qualities of open pan sugar to be melted out of the crop

season, and to be passed through the plant for the purpose of turning it into vacuum-pan sugar should such an operation be profitable, as it actually is in some parts of the world. The *monte-jus* X^1 enables the syrups made in the blow-up or melting tank W^1 to be transferred to the clarifiers P, or to any other point to which it may be decided to deliver it.

A small engineering shop is shown in this arrrangement of plant; B″ being the engine for driving the tools, while C″ is a vertical boiler providing the necessary steam, D″ is a lathe, E″ a planing machine, and F″ a drilling machine, and I″ a vice bench.

The plant is intended to be lighted by electricity, G″ being the electric light engine, and H″ the dynamo for generating the necessary electric current.

Cuban and Peruvian Factories Compared.—That the machinery and plant which are found suitable in one country may not find acceptance in another, is most strikingly shown when comparing a model Cuban factory with a model Peruvian factory—work being carried on night and day in Cuba, and only in daylight in the other; in Cuba heavy tropical rains are frequent, and there is a scarcity of water. In Peru, rain in the valleys where sugar is grown is rare, but the rivers in these valleys, fed by the snows of the Andes, promote vegetation and supply the factories. In Cuba the crop lasts 100 days, in Peru ten months.

References to the two drawings Plates VIII. and IX. show the chief differences.

In Cuba to-day treble crushing is the rule, not the exception. The crushed canes or begass are automatically fed into the furnaces of the boilers which are generally built so as to serve for two or three boilers.

A travelling crane is arranged to run over the mills and gearing to facilitate repairs in case of accident.

The juice expressed by the mills is pumped direct to double bottom defecators into which the requisite proportion

of lime is thrown and mixed with the juice—which when defecated is run, in some instances, through sand filters, thereby effecting a mechanical filtration, or as often as not, run direct to the multiple effect evaporator, entering at 9° Baumé, and leaving at 26° to 27° Baumé. The syrup thus made is extracted from the evaporator by a pump which throws it into the service tanks from which it passes to the vacuum-pan, and being cooked to a strong grain is discharged into the crystallisers in movement, from which it is discharged by compressed air into the receiving and distributing trough of the centrifugals.

The centrifugals are placed on a steel framework high enough up to allow sugar sacks to be suspended below the machines to receive the sugar from the machine direct, the bags being taken immediately to the weighing machine, and a little sugar added or taken out, as the case may be, to make the bag the exact weight of seven to the ton. The mouth of the bag is then sewn up, and it is ready for market.

The centrifugal machines are water driven in preference to any other system, as being the most economical in power and easiest to keep in repair, which, considering the class of men who have to work these machines, is a matter of great importance.

In Peru the buildings are on a more elaborate scale than in Cuba; the walls about 3 ft. thick are built of sun dried bricks, and carry one roof of large span with a travelling crane, to facilitate repairs in case of accident, running nearly the whole length of the building.

Double crushing is adopted and the megass is delivered automatically direct from the mills to the boiler furnaces. This saves labour although all the full economical advantages of the system are not gained as in Cuba, because stopping the works every night allows the brickwork of the furnaces to cool down, and this has to be heated up the next day, before the furnaces get into proper working order again.

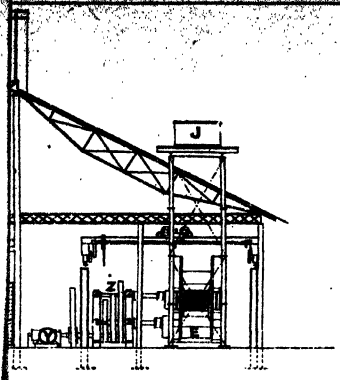

AL SUGAR PER HOUR.

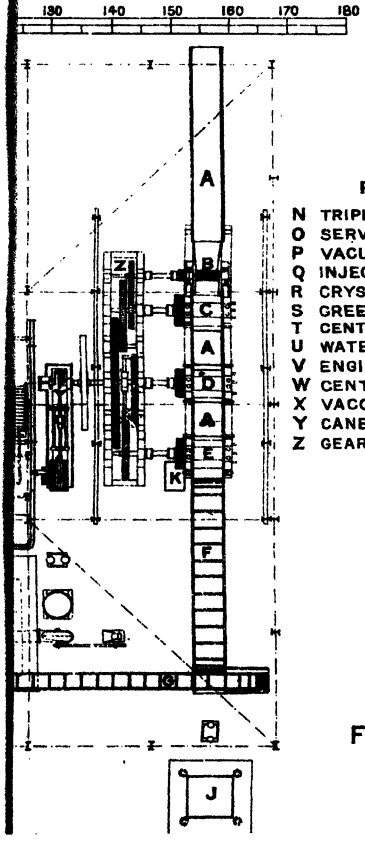

REFERENCES.

- N TRIPLE EFFECT PANS
- O SERVICE TANKS
- P VACUUM PAN
- Q INJECTION CONDENSER
- R CRYSTALLISERS
- S GREEN SUGAR RECEIVER
- T CENTRIFUGAL MACHINES
- U WATER PUMP
- V ENGINE FOR CRYSTALLISERS
- W CENTRIFUGAL PUMP
- X VACCUUM ENGINE
- Y CANE ENGINE
- Z GEARING

FAWCETT. PRESTON & Co.,
Engineers,
LIVERPOOL.

In Peru, owing to the absence of rain, the megass can be left out like hay on the drying ground, but spreading and collecting it again, requires many hands, and as these are lacking, the green megass furnaces have been adopted, and they work well with the long boilers originally erected, with the regular old Rillieux furnace, than which there is no better when the megass is dry.

From the mills the juice is pumped through a powerful juice-heater which superheats the juice under pressure to 220° F. on its way to the steam and juice separator. Here the steam evolved by the release of pressure from the juice passes to the atmosphere, and the juice falls into the subsiding tanks where the proper amount of lime is added to ensure a good defecation. The clear juice is then decanted from the surface of the liquor and run into clarifiers, when it is boiled up and skimmed for a few minutes, and then run to the quadruple effect evaporator which concentrates it to 27° B. The syrup thus produced is run into the syrup clarifier, again boiled up and skimmed, and finally run off to the service tanks from which the vacuum-pans are charged—and being cooked to grain is discharged into the sugar coolers or tubs—holding about 2½ cwt.—each one swung in two trunnions, and are easily moved about by a special frame on large wheels, which catches into the trunnions.

When the sugar has cooled down into a hard mass, the tub is moved over to and turned upside down over the mouth or hopper of the sugar breaker, and the contents forced out by compressed air applied by a flexible pipe to a small valve in the tub.

The sugar breaker speedily disintegrates the mass and prepares it for the centrifugal, and a chain pump lifts the so prepared sugar on to the receiving and distributing trough of the centrifugals. In this case the machines are driven by straps, but any additional machines will be driven by water.

Although the bulk of the sugar is intended for refining,

a certain portion for local consumption is purged with "clairce" and steam, and then passed through the granulator,

The molasses is sent to the distillery and converted into alcohol 63 O.P. by means of a patent Coffey still.

A very well appointed workshop with lathes, planing and drilling machines, driven by independent engine and boiler is placed under the same roof as the sugar factory proper.

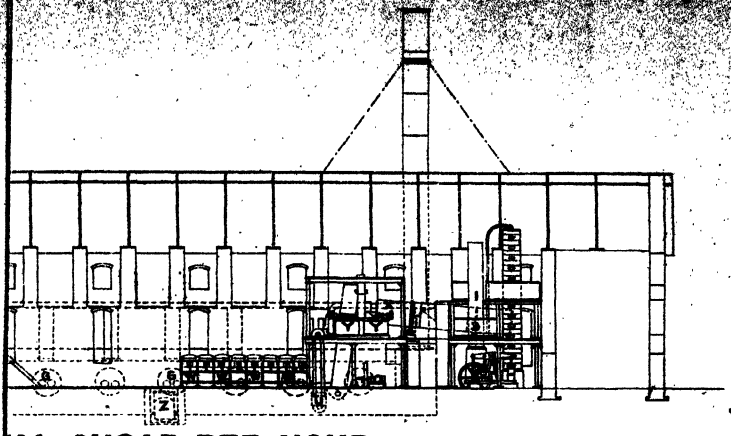

'AL SUGAR PER HOUR.

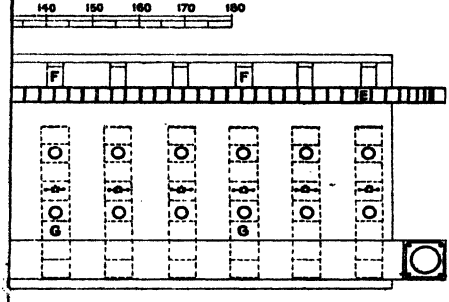

REFERENCES.

- R INJECTION CONDENSER
- S VACUUM ENGINE
- T GREEN SUGAR TUBS
- U GREEN SUGAR BREAKER
- V SUGAR RECEIVER
- W CENTRIFUGAL MACHINES
- X SUGAR DRIER & GRANULATOR
- Y MELTING PANS
- Z MOLASSES MONTEJUS

- 1 COFFEY STILL
- 2 PUMPING ENGINE
- 3 MIXING TANK
- 4 FERMENTING VATS
- 5 FERMENTED WASH VAT
- 6 HIGH SPIRIT RECEIVERS
- 7 WORSHOP AND TOOLS
- 8 OFFICE AND ENGINEERS' QUARTERS

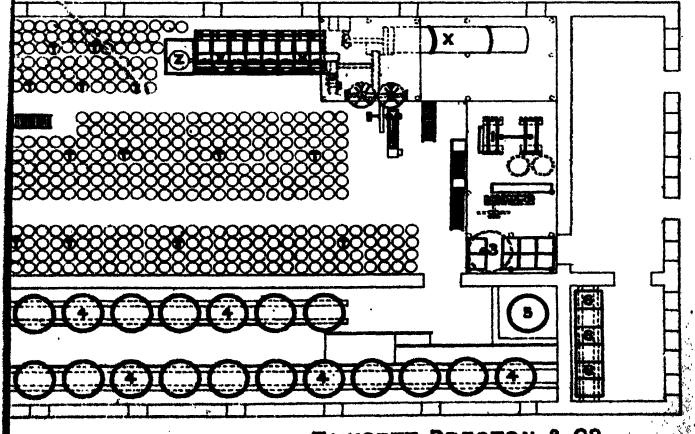

FAWCETT, PRESTON & Co.,
Engineers,

PALM SUGAR

CHAPTER IX.

PALM sugar, often called date-tree sugar, is a product of the juices of many kinds of palm, the most important being the wild date palm (*Phœnix sylvestris*), which thus gives a name to the whole class. Other species are the palmyra (*Borassus flabelliformis*), the coconut (*Cocos nucifera*), the gomuti (*Saguerus* [*Arenga*] *saccharifera*), the nipa (*Nipa fruticans*), and the kittool (*Caryota urens*). All these are essentially natives of the East Indies, Siam, the Malay Peninsula, and the Eastern Archipelago.

The production of palm sugar is a branch of industry, which, with reference to the usually slow progress of native exertion in any new channel, has increased wonderfully since the impulse given to sugar production in India, through the modification of the sugar duties in 1837, and through the encouragement thereby afforded for the employment of British capital and the application of British machinery in sugar production.

The portion of British India more particularly occupied by this cultivation extends nearly due east and west, from Kissengunge in Kishnagur, to a little beyond Nollchit in the Backergunge district; and north and south, from the vicinity of Comercolly in the Pubna district, to the borders of the Sunderbunds, thus occupying on the map a surface of about 130 miles long, east and west, by about 80 broad, north and south. Its principal districts are Jessore, Furreedpore,

and Backergunge, with portions of Nuddeah, Baraset, and Pubna; beyond this tract, little or no date-tree sugar is manufactured, although the tree is often cultivated in other districts, and may be occasionally met with in most parts of India.

Here one species only, *Phœnix sylvestris*, is employed for the production of sugar, though many others might be profitably utilised. From *Cocos nucifera* good goor is commonly made in Province Wellesley, Penang; and from *Borassus flabelliformis*, throughout Bengal, a saccharine juice is obtained and used for drinking purposes, and frequently as a substitute for yeast in making bread, and it is said by the natives to yield a sugar of good grain and greyish complexion.

The sugar obtained by the natives of Bengal and Siam from the various species of palm is, on account of the crude way in which it is manufactured, of very inferior quality, and is mainly consumed in the countries where it is grown. The juice of the nipa palm (*Nipa fruticans*) is almost equal in saccharine richness to that extracted from the cane, with the advantage that it is much cleaner, and contains no colouring matter nor chlorophyll, the vegetable matter being easily precipitated, giving a liquor as clear as spring water. This species of palm flourishes near the sea, or on the edges of brackish pools, and takes up a large quantity of salt, which makes its appearance in the juice in varying quantities, sufficient, in some cases, to give the liquor a decidedly saline taste. Were it not for this drawback, a large quantity of excellent sugar would be obtained from this source.

The date palm requires a humid soil and climate, and flourishes best in the vicinity of water; though it must be above the reach of the annual inundations from the rivers. Like most of the palm tribe, it seems to prefer the vicinity of the sea-shore, and is less often found on the high grounds of the Western Provinces; though on the southern bank of the Ganges, extending from Rajmahal to Monghyr, a great many

trees are met with: their valuable juice is here fermented and drunk as an intoxicating beverage, and its conversion into sugar is unknown.

The trees are never planted with much regularity by the natives, many of them being set in the hedges surrounding the fields appropriated to rice and other grain. Nevertheless, since the cultivation has so greatly increased of late years, plantations have been formed to no small extent, and some attempts have appeared at planting the trees in rows and at regular distances; yet it is evident that the aid of the measuring rod or line is never considered at all requisite in the work. In such plantations, the trees are placed 10 to 15 feet apart, so that sufficient space is left for cultivating an oil-seed or other dry crop between them, without its being injured by the shade of their leaves; indeed, one never hears of any crop so grown being less productive than in the open field, except that of indigo, which is said to suffer through not obtaining the full benefit of the sun's rays. As the modes of planting, extracting the juice, and boiling the same into goor, differ but in trifling details throughout the date-tree tract, a detailed description of the routine as practised in the principal district, Jessore, will be a fair example of the whole.

The trees attain a height of 15 to 25 feet when full grown, according to the nature of the soil they are in. The annual abstraction of their sap evidently stunts their growth very much. A very plain proof of this is occasionally afforded in the date districts by the owner of a plantation leaving one tree untouched by the knife; he is prompted to this by a superstitious notion, that by so devoting one tree to his *Deb* or favourite deity, a greater productiveness will attend the rest of the plantation, and it may be seen towering above its companions to twice their height, or more.

Planting.—The trees are always raised from seed. The fruit ripening in June or July, the seeds are collected and sown shortly afterwards a few inches apart, in a moist spot

selected for a nursery, near the cultivator's house. They soon vegetate, become strong plants, are weeded and watered occasionally during the following dry season, and are ready for being planted out in the field in the succeeding April or May, after the first showers of the season. The ground destined for their reception is well ploughed, and without any assistance from manure, the plants are then placed in the ground, each in a hole made with the hoe or *kodaul.* By the time the rainy season closes, about the following October, they are strong young trees, the leaves 3 to 4 feet high; any accidental vacancy, occasioned by any of them having been destroyed by cattle or other cause, is then filled up.

The roots are occasionally cleared of weeds; and should the ground not be in yearly crop, a ploughing is sometimes given for the benefit of the trees, as this improves them by loosening the earth around them and allowing more scope for the roots. With these exceptions, no other expense or trouble is incurred in their cultivation. The trees arrive at full growth at about their seventh year; but the poverty of the native cultivator seldom allows them to reach beyond 5 years, before he commences extracting the juice. Should the growth of the young trees be forward, he frequently commences at 2 or 3 years old; though this early exhaustion no doubt injures the after-productiveness of the plant, and probably shortens its term of life. Frequently the trees are tapped when the stem is less than a foot in height from the ground, a hole being dug in which to place the earthen pot that receives the juice. When not weakened by too early tapping, the average age of the trees is about 30 years, being 25 years for sugar production after allowing the first five for their undisturbed development. On the borders of the Sunderbunds, however, where the trees grow in strong marshy soils impregnated with salt, it is said that their excessive vegetation causes the trees to exhaust their strength sooner; and that their age in such places does not exceed the average of 17 or 18 years.

The quantity of juice obtained before the trees have reached their 5th year is small and uncertain; if allowed their full 5 years for growth, and first cut in their 6th year, the juice for that year is found to be yielded in the proportion of about one-half the yield of a tree of full maturity; in the 7th year, three-fourths of the full quantity; and it is not until the 8th year that the tree is found to give its full yield of juice.

The expense of planting one beegah of ground is estimated as follows. The natives reckon a beegah to contain 160 trees, or two puns of 80 each, which allows of their being planted about 10 feet apart, then—

				R.	A.	P.	
Cost of 160 plant-trees in sowing, watering, etc., say				1	0	0	
Carrying to field, planting, and replanting deficiencies				1	0	0	
Half-yearly* rent of one beegah of ground, at 2 Rs.	R. 1	A. 0	P. 0				
Ploughing twice per annum, at 2 annas ..	0	4	0				
Weeding ditto ditto, at 4 annas	0	8	0				
Yearly expense	1	12	0				
Which for 5 years, is				8	12	0	
				10	12	0	(21*s.* 6*d.*)
Add compound interest on the above yearly account at the rate of 25 per cent. per annum, is				10	7	2	
Net expenses on the beegah of trees when ready for producing goor				R. 21	3	2	(42*s.* 4¾*d.*)

Cutting the Trees and Collecting the Juice.—The trees are first cut about the 20th of October. This is done by stripping off the lower leaves of the branching head of the tree on one side, so as to leave a denuded space of about a foot long; from this, a piece of the bark is removed in the shape of a triangle, each side of which is about 8 inches long, and having one angle pointed downwards. For the next 8 or 10 days after the above operation, the cut part is left to harden, and what little sap exudes from it is allowed to run to waste, as not

* The other half being chargeable on the oil-seed or other crop grown between the trees.

being sufficient for use. Collecting the juice, therefore, does not commence before about the 1st of November, a few days earlier or later, according to the season, the first cold nights causing the sap to run freely. As soon as this is observed by the *gauchea*, or date-tree labourer, he ascends the tree, Fig. 104, in the evening, and slices away a further portion of the tree, cutting deeper this time, so as to divide the sap-vessels, and from the centre of the triangle towards its sides, in such a way that along the latter a sort of channel is formed, which conducts the juice to the lower point of the triangle; here in a notch is inserted one end of a piece of reed or grooved stick, about 6 inches long, its other end hanging over the earthen pot which is suspended by a string close under it, and into which the juice trickles as it flows from the tree.

The instrument used for cutting the trees is a *daw* or bill-hook, of peculiar shape. The *gauchea* ascends the tree by the aid of a thick rope, which he fastens loosely encircling the tree and his waist, before ascending; then, by pressing his feet against the trunk, leaning back against the rope alternately raising the latter with his hands, and stepping upward, he quickly gains the summit, where, supporting himself against the rope, he leans with his arms free for work. The *daw* is used by pressing the wooden handle tight under his arm, and grasping the back of the blade with both hands, which enables him to cut firmly into the wood.

A man having less than 80 trees does not himself convert their produce into goor, but lets them out, at a yearly rent to any neighbour who has more, for the reason that a less number than this would not yield a sufficient quantity to compensate for the expense of the necessary arrangements for managing the work, such as the construction of the furnace for boiling the goor, etc. The number worked by any one ryot or family varies from 80 to 300 or 400; but for the greater facility of calculating the expense attending this department, a farm of 160 may be assumed, as about to be worked upon,

FIG. 104.—CUTTING THE TREES.

and that these are all full-grown, and capable of yielding the full average quantity of juice.

Whatever number of trees the plantation or farm may comprise, they are lotted off into 7 distinct divisions, all containing as nearly as possible an equal number of trees. The trees of one of these divisions are cut by the ryot every evening in succession, so that the whole number is cut regularly once in 7 days. The first division may be taken as containing 23 trees, on which the work proceeds as follows. The *gauchea* having cut or pared this number in the manner above described, and suspended the pots to them on the previous evening, obtains in the morning, as their first day's produce an average of 10 seers (the seer is about 2 lb. 1 oz.) of juice from each tree, Fig. 105: on the second morning, an average of 4 seers of juice; and on the third morning an average of 2 seers of juice; after this, the reed and pot are removed, and for the 4th, 5th, 6th, and 7th days, the trees are left to recover themselves, the little juice that still exudes during that time being allowed to run to waste, as not worth the labour of collecting. On the evening of the 7th day, it again comes to the turn of these 23 trees to be cut; this is done by peeling off a further portion from the already open cutting, which, again divides the sap-vessels, and the juice recommences flowing; the reed and pot are placed as before, and the same process is repeated, and so on regularly throughout the season. It will be seen from this description, that the ryot by newly cutting a one-seventh division of his trees every evening in succession, will have every succeeding morning to gather the juice from three such divisions yielding respectively 10 seers, 4 seers, and 2 seers of juice from each tree; and that by this system, a uniform quantity of juice is daily procured, and the labour is equally distributed over the time given for it.

1st division	..	23
2nd ,,	..	23
3rd ,,	..	23
4th ,,	..	23
5th ,,	..	23
6th ,,	..	23
7th ,,	..	22
		160

The ryot, therefore, having 160 trees would divide them as

FIG. 105.—COLLECTING THE JUICE.

per margin, and would collect daily the juice of 68 or 69 trees, yielding juice as follows, for trees of full growth and bearing :—

	M.	S.	
23 trees first day's runnings, at 10 seers each	5	30	
23 ,, second ,, ,, 4 ,, ...	2	12	
23 ,, third ,, ,, 2 ,, ...	1	6	
Total juice per diem from 69 trees	9	8	(758 lb.)

The above refers to the juice exuding during the night only and collected early in the morning, from which alone sugar is made. It is sometimes customary likewise, with trees which bear well, to collect in the same manner what may run from them during the day ; but as rapid fermentation takes place immediately the air is warmed, that is, soon after sunrise, the day juice is thereby unfitted for crystallisation into goor, and is boiled up only for sale as molasses. As this practice, however, is far from general, and at the ordinary market rate for molasses barely repays the labour required to produce it, it is not included in the calculation of yield and cost about to be given.

The *gauchea* commences collecting the juice a little before daybreak ; he ascends each tree in succession, having the empty pot for collecting the day juice slung at his back, if it is his intention to collect it also, to be exchanged for that containing the night's produce. With the latter, he carefully descends, and places it near the foot of the tree, proceeding in this way regularly through the trees that may be yielding. A second man collects the juice by merely filling as many spare pots as the quantity obtained may require, and these he places together in some central spot of the plantation ; as soon as a sufficient number is collected to commence a boiling, a third carries them away to the boiling hut. The emptied pots from the trees are then ranged on the ground in rows of about 20 each, with their mouths downwards over a layer of straw or dry leaves ; the latter is then set fire to, and gives the pots a

thorough smoking covering their inner surface with an even black coat. The object of this is to prevent the acidity, which would no doubt set up a fermentation in the fresh juice, were any of that from the previous night allowed to taint the vessel through being absorbed by it, but which is neutralised by the ammonia contained in the smoke.

As an additional slice is pared from the face of the incisions in the trees once every 7th day, this forms towards the end of the season a very deep notch, reaching sometimes nearly half through the trunk. Each succeeding year the trees are cut on opposite sides of the bark, so that they have, when a few years old, a deformed zigzag appearance. It follows that numbering these notches will, in ordinary cases reveal at once the age of the trees. In some localities, however, the ryots are accustomed to newly tap the trees *twice* in each season, once on each side of the bark, in preference to cutting so deeply on one side.

Boiling the Juice.—This is conducted in a mode characteristically simple. Four shallow earthen pans, about 2 feet in diameter and 1 foot deep, are set in a square furnace, formed by digging a hole in the ground and raising a mud structure over it, about 6 feet square, in the dome of which are cut the four holes in which the pans are set, Fig. 106. A hole cut at each side, one for feeding the fire and the other for the escape of the smoke, completes the arrangement of the furnace; over this, a light roof is usually thrown, supported by bamboos, and thatched with the dried leaves of the date tree as a partial shelter from the sun and rain, though the latter is unusual during the season when the work is in progress.

The fuel used is the *soondry* wood, with which the date districts are all more or less easily supplied from the neighbouring Sunderbunds, assisted by the dried leaves of the date tree itself.

The four pans are kept about half-full of date juice, and as the contents diminish by evaporation, fresh juice is supplied,

until each is sufficiently filled to complete the boiling into goor without further addition. Up to this point, skimming

FIG. 106.—BOILING THE JUICE.

goes on; and about a foot in length, cut from the small end of a date-tree leaf, is kept floating in each pan, which is believed to assist the clarification, though it is difficult to see the rationale of this practice. No lime nor alkali was originally used in the process, but it is now usual to add lime, and the juice is simply boiled until it arrives at its proper granulating consistency, which is known to the natives by long practice, from its appearance when allowed to drop from the end of a stick, and from its colour and appearance while boiling. The juice, as brought from the trees, is clean, white, and transparent, resembling the juice of the coconut, both in appearance and taste, though with a sweeter taste to the palate. These qualities give it a decided advantage over the juice of the sugar-cane, it being quite uncontaminated with feculencies, chlorophyll, and other deleterious substances, the separation of which from the cane juice causes so much trouble to the planter. The skimmings from the boiling of date goor are in consequence very trifling, and probably consist principally of albumen, coagulated and thrown to the surface during the process. They are turned to no useful purpose.

The boiling occupies 5 to 6 hours with each pan, and as soon as it is complete, the goor is ladled into a vessel set ready near the furnace. If it is intended for immediate sale to the *moyrah* or sugar maker, this vessel is a long jar-shaped earthen pot, holding 2 seers to ½ maund weight, the size and form varying much according to local custom. If the pots are large they are not filled at once, but the boilings of several days are poured in successively, so that 3, 4 or more pots are filled simultaneously, and contain layers slightly varying in quantity, though the average in all is the same. A great deal of goor is, however, converted by the ryots themselves into a description of sugar called *naund dulloah*, in which case the boiling is not carried to so high a point: and this allows it to form a larger crystal, and to part with its molasses more freely. In such a case it is ladled at once

from the boiling pans into a large *naund* or conical-shaped vessel, holding 2 to 3 maunds, and in this it is cured and drained.

Yield.—Weather that is at once dry and cold is most favourable for the date juice, both as to its quality and yield; and this is the prevailing character of the climate throughout Bengal for the greater part of the time occupied by the goor manufacturing season, which extends on the average over 3½ months, that is, from the 1st November to the 15th February. But little is ever made earlier than the former date, and such is generally of small grain, and inferior; on the other hand any that is made later than the middle of February is of soft grain and contains an undue proportion of molasses. Occasionally the warm weather sets in a week or two earlier and effectually cuts short further goor making; though if the atmosphere be relieved by a good fall of rain in this month as is not unusual, this is always followed by a temporary return of cold nights, and the goor season may be said to commence anew, and very fair produce is obtained for another week or two, extending frequently into the first days of March. But the finest produce is yielded in December and January that is, during the coldest part of the season; and on the whole, the above estimate of 3½ months, or 107 days, may be considered the time occupied by an average productive season. In this period however, are included all the days in which the yield is diminished by rain, or by fogs, which are frequent in Jessore, and are very inimical to the production of good goor, though they do not diminish its quantity. The total production of the juice of 160 trees in a season of 107 days, on the estimate given in a former page, after deducting one-fifth for loss by variations of the weather, is 56,964 lb. or 359 lb. for each tree, and the proportion of goor obtained averages one-tenth of the weight of the juice.

Cost.—The expense to the native ryot of extracting and collecting the juice, and converting it into goor, is calculated

as follows; taking for example, as before, a cultivation of 160 trees in full yield:—

	R.	A.	P.
The expense of cultivating this number on one beegah of ground was before calculated at R. 21–3–2; and assuming these trees to yield in full bearing for the average of 20 years, the expense under this head would fall at per annum	1	0	11
Add half the annual rent at R. 2 per beegah, the other half being chargeable on the annual crops raised between the trees	1	0	0
For the labour of collecting and boiling the juice, it is computed that two men, or *gaucheas*, at R. 3 per month each, and one headman at R. 4 per month to boil the goor, can fully manage 200 trees, on which their wages for 3½ months will amount to R. 35. By the same rule, 160 trees would require an expense in labour of	28	0	0
Earthen pots for holding goor, say 296, of 10 seers each, and costing 12 annas per 100, is	2	3	6
Earthen pans for boiling, extra jars, etc., say	6	0	0
Soondry wood fuel (in addition to dried date-tree leaves) for boiling goor, 400 mds. at R. 5 per 100 mds.	20	0	0
Knives, ropes, and boiling utensils	1	0	0
Setting up furnace and *chopper* roof	1	0	0
	60	4	5
Deduct value of *soondry* wood charcoal from the furnace	1	0	0
Leaving as the net cost of 78¾ bazar mds. (5645 lb.) of goor at the average rate of 12 annas (1*s.* 6*d.*) per maund	59	4	5
	(5*l.* 18*s.* 6½*d.*)		

In the foregoing account, the yield of trees in full bearing only has been computed, that is, their produce after the 7th year of growth. It has previously been explained that for their first 2 years of bearing, that is, for the 6th and 7th years of growth, the trees yield respectively only one-half and three-fourths of their full yield, and this would consequently enhance somewhat the cost of the goor made in these 2 years. To compensate for this, the total duration of the period of yielding is estimated in the above account at 20 years, in lieu of the fair average of 25 years, so that the return of the cost of 12 annas per maund for the goor may be considered as not much affected by this irregularity.

It has been already mentioned, that it is customary for a

ryot having a few trees only, to lease them to any neighbour who has a larger number. Wealthy owners of large plantations also frequently lease them for the season to ryots, who engage themselves specially in the business of goor making. Before the value of sugars rose in the date districts, under the influence of competition for the supply of the English markets, engagements of this nature were generally made at the rate of 16 to 20 trees per rupee (2*s.*) as their yearly rental. But since the increased demand alluded to, the rate has gradually risen to more than double the former standard, and 8 or 10 trees per rupee per annum is a common bargain. Even at the first-mentioned rate, it will be seen that the yield per beegah to the cultivator would be 8 to 10 rupees (16 to 20*s.*) per annum, being a very remunerative return on the expense of cultivation, and, at the rates current of late years, the profits must have been enormous. It is true that the Zemindar has, in most cases, stepped in and claimed his share of the profits by a tax on the trees (whether legally or not, is a question that would be irrelevant here to discuss), and in this manner has curtailed the profit to the ryot. Yet even with this drawback, after looking at the above details, we shall cease to wonder at the enormous and rapid increase in the cultivation; and the traveller through Jessore and the neighbouring districts will be less surprised at the interminable groves of date-trees in all stages of growth which surround him in every direction.

History.—The history of the cultivation of the date-tree, and manufacture of its sugar by Europeans, is an almost uninterrupted blank. The very existence of such an article as date-tree sugar appears to have been almost forgotten during the latter periods of the East India Company's trade monopoly; though in former times occasional reference was made to it in the correspondence between the Court of Directors and their Board of Trade in Calcutta. In 1793, a shipment of 54 factory maunds (36 cwt.) was consigned home by the latter; but the smallness of the parcel probably caused it to

be overlooked, and the result of its sale is not recorded. In a Minute of the same Board's Consultations, dated 4th September, 1792, the whole annual produce of date-sugar in Bengal was estimated at 15,000 maunds (10,000 cwt.). The cultivation was probably, therefore, in its infancy at this period; and its further cultivation was checked for the next quarter of a century, as well by the restrictions of the Company's monopoly, as by the high discriminative rates of import duty imposed on East India sugars by the home government. Previous to 1830, it certainly appears to have been unknown as an article of commerce in the home markets, though long previously used in Calcutta by the native refiners, and as an article of native consumption.

No means exist of tracing, with anything approaching to correctness, the yearly rate of increase in the production of date-sugar since that period, nor of ascertaining its present extent. From an estimate of the quantities purchased for the European refineries, added to the amount of native refined sorts sold for export in the Calcutta market, under the names of *gurpatta* and *dobarrah*, Robinson concluded that 9500 to 10,000 tons, or at least one-fifth of the whole annual quantity exported to England, was in 1850 composed of date-sugars.

The attention bestowed by Europeans on the production of these sugars for the Calcutta or home markets, has been confined to the remanufacture or refining of the native raw material, such as *khaur*, *dulloah*, etc.; and for this purpose, it has been deservedly held in very great esteem, producing a good-coloured and well-crystallised sugar. On the other hand, the raw date-sugars are more liable to deteriorate by being kept in store, losing both colour and strength more rapidly than cane sugar; this applies, however, to the raw products only, the refined or reboiled sugars stand the voyage home, or being kept in store in India, equally well with those from cane.

The cause of the above-mentioned peculiarity appears to

lie in the larger proportion of gluten present in date-sugars; and the tendency of this substance to decomposition, when in contact with saccharine matter, seems sufficient to account for most of the characteristics distinguishing it from cane sugar. These are no less remarkable in the molasses than in the sugar itself, that from date-sugar possessing far less saccharine matter, and being of much darker colour than that from cane, which is probably caused by the gluten being partly decomposed by the lime and heat of the boiling process. Another distinguishing feature, however, worthy of remark is the absence from the date-sugar of the empyreumatic oil, so observable in all cane produce, and which affords to the rum made from cane molasses its well-known flavour.

On considering the low cost of date-sugars as compared with cane, and the little trouble and risk incurred in rearing the trees, it seems, at first glance, remarkable that the European planter has not been induced to avail himself of this cultivation for producing sugar on a large scale. But great discouragements to the investment of English capital in this way no doubt exist in the uncertain and ill-defined nature of land-tenure in Bengal, the length of time the trees occupy in coming to their full bearing, as well as in the difficulty of collecting the juice for boiling into sugar by the European method after they may have been reared. Yet these are drawbacks which will probably be overcome.

In speaking of the native date-sugar cultivation, it has been shown that the annual produce of a full-grown date plantation was equal to 78¾ maunds of goor per Bengal beegah, which, converted into *khaur*, may be taken as equivalent to a yield of about 5½ tons of muscovado sugar per English acre. The calculations given subsequently on native sugar manufacture proved: (1) That date-sugars could be produced at about two-thirds the cost of cane sugar, of equal quality; (2) that the date crop involved little or no risk, and a comparatively small outlay in the cultivation; and (3) that good white sugar

could be produced therefrom, by native methods, at a cost of R. 4-10-7 per maund, and fine crystallised ditto at R. 6-13-9 per maund, equal to 12*s.* 6*d.* and 18*s.* 3*d.* per cwt. respectively of English money, delivered in Calcutta. By the application of refining to the native raw date-sugars, good white vacuum-pan sugar is produced at or within a cost of R. 5 per maund, or 13*s.* 6*d.* per cwt. delivered in Calcutta. Whether any reduction can be made on this cost, by the application of European means and machinery to the juice direct from the tree, and so converting it by one process into marketable sugar, is a problem which remains for the future to solve.

MAPLE SUGAR

CHAPTER X.

THE rock, hard, or sugar maple (*Acer saccharinum*) is a tall and ornamental tree, flourishing throughout most of the North American continent. Its wood forms excellent fuel, and in consequence of the great demand for building timber and fire-wood in the long settled States of the Union, the reckless cutting of the trees has there tended to extinguish it. Still many "groves" or "bushes" remain, where the collecting of maple sugar is a regular industry, and in the more thinly peopled parts there is said to be an increasing regard for the sugar-yielding qualities of the tree.

In sections of the United States where it prevails, the manufacture of sugar and syrup from it is a remunerative adjunct to other farming industries. The season of manufacture beginning where winter ends, and concluding before the ground is sufficiently thawed and settled for spring work proper to commence, occupies a period in which little other farm work can be pursued. The apparatus for collecting the sap and manufacturing the sugar, involves a very small investment. The fuel consumed is usually on the ground, consisting of the prunings of the maple grove, which is benefited thereby; and within a month or six weeks from the time the process of production begins, the farmer may have the cash in hand for his surplus product, and that at a season when he rarely has other cash productions to dispose of.

Vermont has probably given more attention to the develop-

ment of this industry, and been more on the alert to discover and promptly adopt improved processes of manufacture than any other State. As a consequence, it has made large relative gains on other States having like resources. Though among the smallest in productive area, at a late census, in the amount of sugar produced, it had outstripped all others, exceeding New York the next highest, by 2,202,262 lb., which, estimating the product of that season at a value of 10 cents (5*d.*) a lb., would be $901,453 (187,802*l.*). Except the labour of the ordinary force on the farm, at the most impracticable season for other farm work, the outlay is so small that at least 90 per cent. of this gross sum is net income earned, as it were, incidentally, while waiting for the frost to come out of the ground. It is not strange, therefore, that the beautiful maple orchards, which embower the declivities and crown the hill-tops of that agricultural State, are often held at a higher value than other land, covered with hardwood timber, or under cultivation.

The sugar maple is a much larger tree than the red maple, and is at once distinguishable from it by the roundness of the notch between the lobes of the leaves. It is one of the largest trees of the genus, often attaining a diameter of from 3 to 4 feet, and out-topping the other deciduous trees, sometimes reaching a height of over 100 feet. For fuel and charcoal, its wood is especially valuable; it also produces the well-known "bird's-eye maple" used in cabinet work, supposed by Emerson to be a distinct variety of the sugar maple, but from information obtained by Geo. Maw in Upper Canada, it seems probable that it is only of mere casual occurrence in individual trees. This species is pre-eminently the source of maple sugar, and was known to the Indians before the settlement of the country by Europeans.

A very interesting physiological point connected with the production of maple sugar, is the variability of the flow of the sap dependent on diurnal changes of weather, the whole life

forces of the big old trees being apparently ruled by trifling changes of temperature and alternations of heat and frost. Changes of life-action occur which are inappreciable to the eye in the daily development of the spring growth, but which the flow of sap records with precision.

The rising of sweet sap commences immediately after the first break up of the long frost, from the middle to the end of February, continuing through March and into the early days of April, but varying in different localities and at different seasons. A cold north-west wind, with frosty nights and sunny days in alternation, tends to incite the flow, which is more abundant in the day than at night. It is, however, most sensitive to unfavourable changes, and a run of 3 gallons a day from one tree may almost cease in a few hours, and then gradually recover itself. From this, it will be seen, that the yield given from day to day is uncertain, and that reliable statistics of produce are difficult to record. A continuous course of favourable weather tends to the largest production, a rising and falling supply reducing the total of the season.

The time at which the flow commences varies not only with the season, but with the exposure and elevation of the ground, being earliest in warm and low situations. A thawing night is said to promote it, and it ceases during a south wind, and at the approach of a storm. So sensitive are the trees to aspect and climatic variations, that the flow of sap on the south and east sides has been noticed to be earlier than on the north and west sides of the same tree. There are generally 10 to 15 good sap days in the sap season, which continues on and off for about 6 weeks; after this, as the foliage develops, the saccharine matter is reduced, and the sap is said to be "sour," though a restricted flow still continues. Emerson, in his work on the 'Trees of Massachusetts,' referring to Michaux's observations, considers that the production of sugar depends also on the character of the previous summer, and that a season of plentiful rain and sunshine prepares the trees

for an abundant harvest of sugar in the succeeding spring. Open winters are thought to cause the sap to be sweetest; and much freezing and thawing, to make it most abundant and of the best quality. The sap of isolated trees is richer in sugar than that of those which are massed together in the forest.

The best soil is a loose rich loam, and some prefer a limestone or slate formation to any other. The application of wood ashes has been found to increase the sugar yield. An elevated position is deemed superior, yet moist ground produces more sap, and according to the majority of growers more sap means more sugar.

In the Maple Bush, at Haysville, the produce of sugar was at the rate of 1 lb. to each 6 gallons of sap, and the average may be 1 lb. to 4½ or 5 gallons, but instances are given in which 1 lb. of sugar has been produced from 3 gallons of sap. With reference to the product of individual trees, in a good sap season, an average tree will run as much as 3 gallons of sap in a day, occasionally more, and produce about 4 lb. of sugar in the season; but Emerson records cases of the production of 10, 20, 33, and 43 lb. of sugar from single trees. Such weights are, however, altogether exceptional. The highest weight was produced from a draught of 175 gallons of sap from a single tree. The average quantity per tree would be 12 to 24 gallons in a season. Young trees under 25 years old are seldom tapped, the smaller trees scarcely paying for the trouble, apart from the debility it produces in them. Repeated tapping of the matured trees causes no apparent injurious effect on their vigour. In many instances, trees have been tapped for 40 consecutive years without harm, and it is said that both the quality and quantity of sap are visibly improved after the first tapping.

The trees are usually tapped at a height of 3 or 4 feet from the ground, with a ⅜ to ⅝-inch auger to a depth of 1 to 1½ inch, into which a perforated plug is driven, to lead the sap into the

collecting vessels, preferably of tin and as light as possible; or a simple notch 1½ inch deep is cut with the axe. One to three taps are inserted in each tree, and these have to be removed in succeeding years to fresh places, generally alternated on opposite sides of the tree. The sap is evaporated either in iron caldrons or in shallow boilers, 6 feet long, 2½ feet wide, and about 8 inches deep. Those of copper are preferred to iron, as they are said to yield a whiter sugar. Care is taken to keep the boilers filled up with fresh additions of sap during evaporation, till the syrup attains a sufficient consistency, which is ascertained by its "breaking" or crystallising when dropped into cold water. The syrup is strained during evaporation, a small quantity of lime or soda being added to neutralise any free acids that are present, and a little white of egg or milk to clear it. After straining and skimming, the syrup is poured into pans or moulds to crystallise, and it may be further clarified by gently boiling in tapering cans, with a tap at the bottom, towards which the molasses gravitates, and is drawn off as the crystallised sugar sets.

Maple sugar is made not so much as an article of commerce, as for the home use of the producers; and the great bulk being consumed where it is made, it is difficult to arrive at anything like an accurate estimate of the total production. Emerson states that in Massachusetts alone between 500,000 and 600,000 lb. weight of sugar are annually produced from the maple, and he values it at 8 cents (4*d.*) a lb. In 1874, the price rose to 10 to 22 cents (5*d.* to 11*d.* a lb.). In Canada, at the beginning of April 1878, new maple sugar was selling at 10 to 11 cents (5*d.* to 5½*d.* a lb.), about the price of the best cane sugar; and in April 1882, the new season's sugar was quoted at 22 cents. A considerable proportion of the maple sap product is also preserved as syrup without crystallisation, and in this state it is used as sweet sauce, and for various culinary purposes.

In the St. Louis Exhibition, samples of maple sugar were shown in the form of blocks of a golden yellow colour, and each of about 2 lb. in weight. The sugar has a characteristic flavour and a faint honey-like smell. A sample obtained by M. de Vilmorin and analysed by M. Buisson gave the following results: Sucrose by Clerget inversion 85·40, reducing sugars 5·09, soluble ash 0·75, insoluble ash 0·01, water and organic matters, by difference 8·75 per cent. The reducing sugars appear from the rotatory power to contain a little more dextrose than levulose. Analyses were also made by M. Lindet of maple syrups and loaf sugar. The samples were exhibited in 1900 by the Canadian section and furnished by the Commissioner General.

	Maple Syrup		Sugar
	Vermont	Quebec	Quebec
Water	30·15	31·80	4·89
Sucrose	62·92	63·10	88·04
Reducing sugars	1·96	0·29	3·92
Ash	0·62	0·51	0·42
Organic matter (by difference)	4·35	4·30	2·73
	100·00	100·00	100·00

Both syrups marked 37° B.

Maple sugar is described by de Vilmorin as a crystallised product much used in pastry and for the breakfast table, chiefly exploited in the North-eastern States of America. The annual production is about 5000 tons. In commerce, it is usually found mixed with cane sugar. M. Vivien, in the Bulletin de l'Association des Chimistes de Sucrerie states that it was in 1878 or 1879 when sugar had gone up to 100 francs, and a sugar famine was feared, that Messrs. Lebaudy freighted ships with maple sugar, and the price of sugar fell over 30 francs in a fortnight, when the news became known. Messrs. Lebaudy had a lot of trouble with it in their refinery.

The value of the maple sugar crop of the year 1885 was officially estimated at Washington at about 550,000*l.* Maple sugar being a product of the forest, is chiefly confined to those regions of the interior where it is a convenient substitute for cane sugar. The sugar-cane can only be raised in the extreme southern latitudes of the United States, whereas the sugar-maple flourishes in the greater part of the inhabited sections, and though the sugar produced from it is inferior to that of the cane, yet it requires but little care, and is in some places cheaper.

Maple sugar as an article of merchandise seems in a fair way of extinction. The maple forests of New England are being yearly cut down and converted into broom-handles. Thousands of splendid trees are annually felled. At the present rate of destruction, maple sugar will before long be unknown in the trade. The whole amount of maple sugar reported in the States was, according to the latest official agricultural statistics, about 40,000,000 lb. annually, but this was considered to be one-third below the actual quantity made. According to the census returns, Vermont reported a yield of almost 10,000,000 lb. The production of New York is somewhat larger, but nothing compared with the difference in area. The only other States which return more than 1,000,000 lb. are: Michigan, 4; Ohio, 3¼; Pennsylvania, nearly 3; New Hampshire, 2¼; Indiana, 1½; Massachusetts, a few pounds more than 1 million. The total production of maple molasses is 1,500,000 gallons, of which, Ohio returns nearly 400,000 gallons; Indiana, nearly 300,000; Kentucky, 140,000; and Vermont only 16,000 gallons. In addition to the large production of maple sugar in the States, the estimated quantity manufactured by the Indians living east of the Mississippi is 10,000,000 lb. per annum, and the quantity manufactured by those living west of the river is set down at 20,000,000 lb., but it is probably much greater. Of the American States, Vermont makes by far the largest quantity in proportion to its territory,

and in some of the northern districts of this State the use of cane sugar is almost unknown. Two groves in North Harpersfield, Delaware County, New York, containing 4200 trees, yielded 7 tons of sugar. In 1876, the town of Harpersfield produced 200,000 lb, of sugar.

Many improvements have been made in the manufacture of maple sugar during the last few years. Formerly the highest attainments only resulted in the production of a fine muscovado-like sugar; but now, by improved processes, specimens are annually exhibited at the various agricultural fairs, vying with the most beautiful loaf sugar. This has been effected by greater attention to cleanliness in the preparation of the sap, and the improvements in draining and refining the sugar. A few years ago, a premium was awarded by the Oswego County Agricultural Society, New York, to R. Tinkor, for the following improved method of preparing maple sugar. The sap is boiled in a potash caldron to a thick syrup; strained when warm, let stand for twenty-four hours to settle, then poured off, leaving behind all that is impure. To clarify 50 lb., 1 quart of milk, 1 oz. of saleratus, and the whites of two eggs are well mixed; the sugar is then boiled again, until it is hard enough to lay upon a saucer, and finally allowed to stand in the kettle and cool. Very little stirring will prevent it caking in the caldron. For draining, a funnel-shaped tube, 15 inches square at the top, and coming to a point at the bottom, is used. The sugar is put in when cold; a tap is inserted at the bottom and a damp flannel cloth of two or three thicknesses is kept on the top of the mass. When drained, the sugar is dissolved in pure warm water, and clarified and drained as before.

In Canada, an incision or a hole is cut in the trunk a few feet from the ground; in the United States, the large branches are also punctured; a recipient is placed to catch the sap. To save transport, and to accelerate and simplify the manufacture, a rough shed is run up in the woods, and a large boiler

is suspended over a brisk fire. The sap is thrown into it, and stirred with a wooden spade. When it boils, it thickens, exchanges its white colour for a golden yellow, and is poured out into wooden moulds, in which it solidifies on cooling; sometimes it is turned out into earthen pots, which bleaches it, but the quality is sacrificed to colour. Michaux states that three persons can attend to 250 trees, which would yield 1000 lb. of sugar, or about 4 lb. per tree. In the State of New York, there were in 1860 about 10,000,000 acres planted with the sugar maple, in the proportion of about 30 trees to the acre. The maple sugar product of Canada was stated in 1849 at 2,303,000 lb. for the Lower Province, and 4,161,000 lb. for Upper Canada. The census of 1851 gave the total at 10,000,000 lb., exclusive of what was used locally without being brought to market.

In 1850, the production in the States was officially given at 15,520 tons; in 1855, at 14,500 tons; in 1858, at 24000 tons; in 1860 and 1861, at an average of 27,000 tons; and in 1872 it was only 16,000 tons.

The following table is given by Lewis S. Ware :—

TOTAL PRODUCTION OF MAPLE SUGAR IN THE UNITED STATES.

	lb.		lb.
1861	42,000,000	1870	28,443,645
1862	44,000,000	1871	30,756,000
1863	41,500,000	1872	31,632,000
1864	40,500,000	1873	32,257,000
1865	39,740,796	1874	33,044,200
1866	37,532,000	1875	43,197,930
1867	35,654,000	1876	43,288,080
1868	33,421,000	1877	41,000,000
1869	22,114,500		

According to the census reports the amount of maple sugar made in 1900 in the United States was 11,928,770 lb. The largest output recorded is 40,120,205 lb. in 1860. The output of maple syrup was 2,056,611 gallons in 1900. The ideal conditions for a good crop of maple sugar juice are little snow, plenty of frost in the ground, with cold nights and warm

sunny days. As maple sugar and syrup are frequently mixed with cane sugar, the New Hampshire State Board of Health has recently issued a circular calling attention to the law relating to such adulteration. The law provides that "no person shall sell, expose for sale, exchange, barter or deal in any article as and for maple sugar, maple candy, or maple syrup unless the same shall be sugar, candy or syrup made solely from the sap of the maple tree." New maple sugar is reported from Hornellsville, N. Y., to be bringing 12 cents per pound on the market. It would seem that maple sugar does not obtain the price in Virginia that it does in New York; the product of Highland county has for several years past found ready exchange, pound for pound, for white granulated sugar.

There can be no doubt that the sugar supply from the true sugar maple is considerably supplemented by the saccharine sap of other species of this same genus, notably the white, soft, silver, or river maple (*A. dasycarpum*), the black maple (*A. nigrum*), and the swamp, red, or water maple (*A. rubrum*), besides in a lesser degree the cabinet maple (*A. macrophyllum*) and the vine maple (*A. circinatum*). In fact, most maple groves contain the three first named, interspersed among the sugar maples, and the sap is drawn from all four indiscriminately.

While in Nebraska no maple sugar is made, an article equally good is manufactured to a considerable extent from the ash-leaved maple, or box elder (*Negundo fraxinifolium* [*aceroides*]), growing on the banks of rivers from Pennsylvania to Carolina, which gives great promise as a sugar-producing tree. Some investigations were made in Illinois, with reference to its value for sugar, and the following is a summary of the report—(1) That it produces more sap than the sugar-maple of equal size, half a gallon per day being obtained from a small tree of 3½ inches in diameter and 5 years old; (2) that the sap is richer in sugar—the yield of dry sugar averag-

MAPLE SUGAR MANUFACTURED IN THE UNITED STATES.

State	Sugar		
	1870	1860	1850
	lb.	lb.	lb.
Illinois	136,873	134,195	248,904
Indiana	1,332,332	1,541,761	2,921,192
Iowa	146,490	315,436	78,407
Kentucky	269,416	380,941	437,305
Maine	160,805	306,742	93,542
Massachusetts	399,800	1,006,078	795,525
Michigan	1,781,855	4,051,822	2,439,794
Minnesota	210,467	370,669	2,950
Missouri	116,980	142,028	178,910
New Hampshire	1,800,704	2,255,012	1,298,863
New York	6,692,040	10,816,419	10,357,484
Ohio	3,469,128	3,345,508	4,588,209
Pennsylvania	1,545,917	2,767,335	2,326,525
Tennessee	134,968	115,620	158,557
Vermont	8,894,302	9,807,781	6,349,357
Virginia	245,093	938,103	1,227,665
West Virginia	490,606	..	..
Wisconsin	507,192	1,584,451	610,976
United States	28,443,645	40,120,205	24,253,436

ing 2·8 per cent. of the weight of the sap; (3) that the sugar produced is in general whiter than that from the sugar maple treated in the same way. These facts should recommend this tree to the early attention of all planters, especially in prairie regions.

MELON SUGAR

CHAPTER XI.

THE preparation of syrup from the melon (*Cucumis Melo*) is fast assuming some importance in America. The long delta between the rivers Sacramento and San Joaquin, California, is submerged at high water, and therefore unfit for ordinary culture. But when reclaimed by embankments, it is exceptionally productive. Melons constitute a crop that never fails in this climate, and a factory has been erected on Andros Island to work up the melon juice derived from a large area, at small expense for transport. Water melons with white pulp are preferred, and it is said that seed obtained from Hungary has yielded plants whose fruits surpassed any produced from native American stock. The plants are set out at distances of 12 feet apart one way and 6 feet the other. Their leaves cover the ground and kill all weeds before the latter have time to develop. Besides, they form an impenetrable mulching, which keeps the soil moist.

The juice of the melon is asserted to be free from those non-saccharine bodies which make the extraction of beet and cane sugars such an expensive matter. On the other hand, the sugar is uncrystallisable, and does not amount to more than 7 per cent. of the weight of the fruit. Usually the juice is only evaporated to such an extent as to afford a syrup, the ordinary yield being 1 gallon of syrup from 8 gallons of juice. The flavour of melon syrup is said to be much superior to

that of common beet sugar. The cost of production is set down at 5½ cents (2¾*d.*) per lb., as against beet sugar at 7 cents (3½*d.*). One grower in California made 125 barrels of syrup in a single season several years since; and an excellent syrup was produced in South Carolina so long ago as previous to 1844. No doubt is felt that melons would thrive luxuriantly in New Jersey, Delaware, and Maryland. The same may be said of all sub-tropical lands possessing a sufficiently damp climate. It must also be remembered that the seeds afford a valuable oil, and that the pulp and seed-cake are excellent food for cattle; but as a source of commercial sugar, melons cannot compete with cane and beet in any country.

BEET SUGAR

CHAPTER XII.

CULTIVATION OF THE PLANT.

The Plant.—The sugar beet, according to the best botanical authorities, is indigenous to the eastern shores of the Mediterranean, where it was originally an annual plant, maturing its seed during the first year of growth.

In its natural state it contained a very low content of sugar, and its present excellence as a sugar-producing plant is due solely to scientific culture and selection of seeds.

As now grown, the beetroot (*Beta vulgaris*) is a hardy biennial plant, long under cultivation in France, Germany, Belgium, Holland, Scandinavia, Austria, Russia and England, and more recently established in Canada, the United States, and New Zealand. A great many varieties are known to cultivators, but the most important to the sugar-maker is the Silesian, sometimes regarded as a distinct species (*B. alba*), and exhibiting several forms. Grown to perfection, the Silesian beet is pear-shaped, shows very little above ground, and penetrates about 12 inches into the soil, throwing out numerous rootlets. It has a white flesh, the two chief varieties being distinguished by one having a rose-coloured skin and purple-ribbed leaves, the other a white skin and green leaves. Both are frequently seen growing together in the same field, and do not exhibit any marked difference in their respective sugar-yielding qualities.

The selection of seed deserves the greatest attention on the part of the beetroot grower. Experience has shown that roots rich in sugar transmit their richness to the next generation, whilst seed from light, ill-shaped roots, poor in sugar, produce similar inferior roots. In France great trouble has been taken by Vilmorin, the celebrated seedsman, of Paris, in the selection and crossing of beet, and Vilmorin's improved beet, which by some is regarded as a special variety of the Silesian, is justly esteemed in France and Belgium for its sugar-yielding capabilities.

Great attention is also paid in the north of Germany, more particularly in the neighbourhood of Magdeburg, in Prussia, to the growing of superior beetroot seed. Owing to the fact that, in Prussia, the duty is levied on the roots, and not on the manufactured sugar, as in France, special care has been taken in Prussia to propagate roots rich in sugar, and speaking generally, beets grown in Germany yield 3 to 4 per cent. more sugar on an average than those raised in France.

Before the passing of the sugar law of 1884 the duty in France was paid on the sugar leaving the factory, but this law decided that the duty should henceforth be levied on the beet-roots so that roots giving less than 7·75 per cent. of sugar become thereby per-force excluded.

M. Georges, President of Central Committee of French Sugar Manufacturers, in a letter to his colleagues, gives the results he had obtained from experiments made in conjunction with, and on the estates of, M. Fouquier d'Hérouel, beet grower in Vaux-sous-Laon. Weary of varying results, and the losses experienced by use of bought seed, the latter determined to raise his own seed, and hoped by a process of judicious selection to obtain a stock of roots which should be at the same time rich in sugar and specially adapted to the soil of his estate. Starting with the best roots he could obtain, and always choosing the best of each year's crop for the next year's seed, he considers he has obtained results which reward

him for his trouble. This is an experiment which other beet growers may do well to copy.

Good sugar beets possess the following broad characteristics :—

1. They have a regular pear-shaped form, and smooth skin. Long, tapering, carrot-like roots are considered inferior to pear-shaped Silesian beets.

2. They do not throw out forks, or fingers and toes.

3. They have white and firm flesh, delicate and uniform structure, and clean sugary flavour. Thick-skinned roots are frequently spongy, and always more watery than beets distinguished by a uniform firm and close texture.

4. They weigh, on an average, 1½ to 2½ lb. apiece. Neither very large nor very small roots are profitable to the sugar manufacturer. As a rule, beets weighing more than 3½ lb. are watery, and poor in sugar; and very small roots, weighing less than ¾ lb., are either unripe or too woody, and in either case yield comparatively little sugar. As the soil and season have a great influence upon the composition of the crop, it is quite possible in a favourable season, and with proper cultivation, to produce beets weighing over 4 lb., which, nevertheless, yield a good percentage of sugar. Speaking generally, good beetroots in average seasons seldom exceed 2½ lb. in weight.

5. Good sugar-beets show no tendency to become necky, and their tops are always smaller than those of inferior beets. Corenwinder has shown that beets with large leaves are generally richer than those with small leaves, and he prefers the former for seed.

6. Good beetroots are considerably denser than water, and rapidly sink to the bottom of a vessel filled with water. The specific gravity of the roots affords a pretty good test of their quality, for the greater their specific gravity the richer in sugar they will be found, as a rule. A still better test than the gravity of the root is the specific weight of the expressed juice. The juice of good roots has usually a density varying

between 1·06 and 1·07. When very rich in sugar, the gravity of the juice rises above 1·07, even reaching 1·078 in English-grown roots, indicating over 14 per cent. of crystallisable sugar. Juice poor in sugar always has a density below 1·06. Estimating the sugar-value of juice by its density has already been alluded to under Cane Sugar (see pp. 107–8).

7. In a well-cultivated soil, the roots grow entirely in the ground, and throw up leaves of moderate size. This tendency

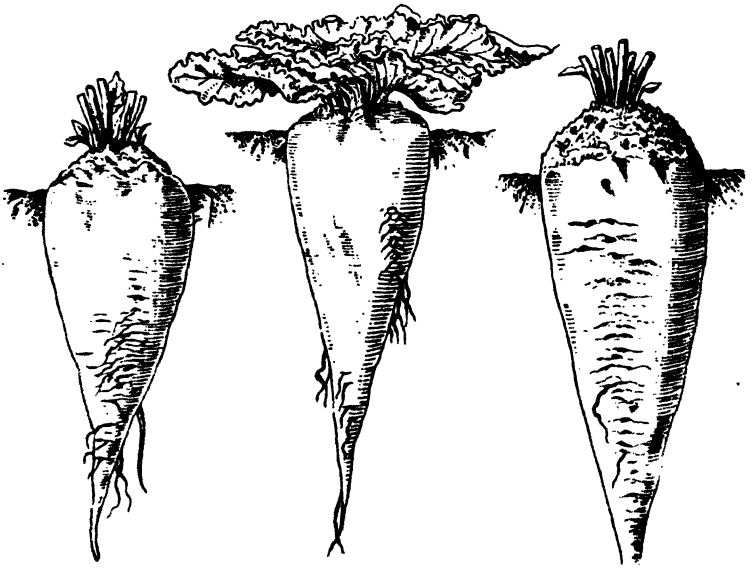

FIGS. 107, 108, 109.—TYPES OF SUGAR BEETS.

to bury itself in the soil is characteristic of good sugar-beet. But it may be greatly frustrated in thin stony soil, and in stiff clay, resting on an impervious subsoil.

At the Paris Exhibition of 1878, Vilmorin showed a fine collection of beets, with the proportions of sugar they were respectively capable of yielding. They form five classes:—

The white sugar beet of Silesia (Fig. 107), the mother-plant of all the white varieties now grown, which, by acclima-

tisation or degeneration, has developed an innumerable crowd of varieties, more or less suited for sugar-making; such are the Magdeburg, Imperial (Fig. 108), Electoral, etc. The Acclimatised (in France) white Silesian, is highly recommended, analysing 12 to 14 per cent. of sugar, and returning 45,000 and even 50,000 kilogrammes of roots, or 6500 kilogrammes of sugar, per hectare (say 39,600 to 44,000 lb. of roots, or 5720 lb. of sugar, per acre).

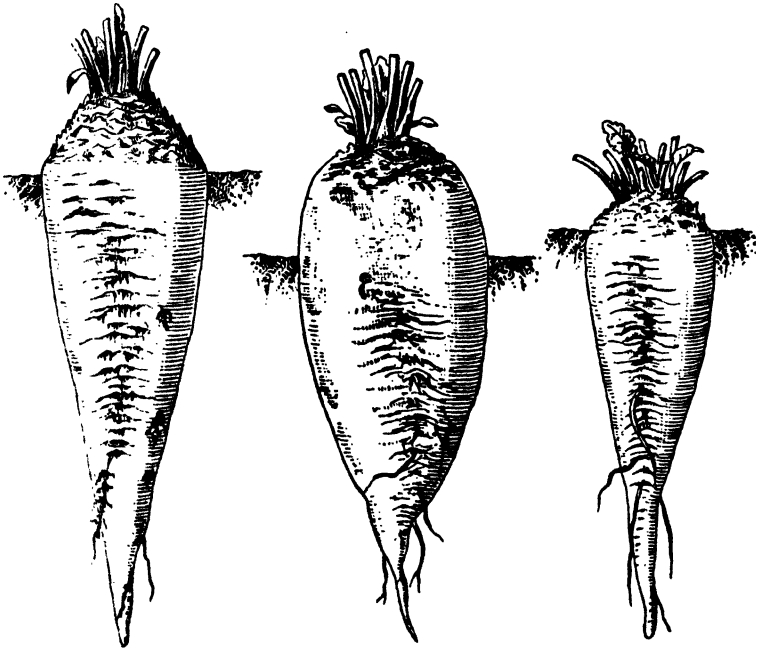

FIGS. 110, 111, 112.—TYPES OF SUGAR BEETS.

The Green-neck of French culture (Fig. 109) is more gross, better formed, and smoother, than the preceding. It will give 60,000 kilogrammes to the hectare (52,800 lb. per acre), and titrates 11 to 14 per cent. of sugar, or a mean yield of 7800 kilogrammes of sugar per hectare, sometimes rising to 8300 (say 6864 to 7304 lb. per acre). This sort is less cultivated now, preference being given to the following :—

The Red-neck (Fig. 110) is very vigorous, a heavy cropper—70,000 to 75,000 kilogrammes per hectare (61,600 to 66,000 lb. per acre),—of regular form, and titrates 10 to 13 per cent. of sugar, equal to 8400 kilogrammes of sugar per hectare, occasionally even 8800 (say 7392 to 7744 lb. per acre); the foliage is vigorous and abundant, the neck is small, and it stores well; it is the most highly esteemed of all kinds by French growers.

The Grey-neck or Northern rose-grey (Fig. 111) is the most productive of roots, but least rich in sugar, and is consequently the last in the sugar-maker's estimation.

Vilmorin's Improved White (Fig. 112), educated directly from the Silesian white, is the richest of all in sugar-yield, containing 15 to 18 per cent., and the juice is extremely pure; but the return per acre is small, though it has been raised of late years to 45,000 kilogrammes per hectare (39,600 lb. per acre). It is the most highly esteemed in those countries (Germany and Russia) where the duty is levied on the roots, but is little grown in France.

The comparative values of the chief sorts will be more readily seen from the annexed table, premising that the figures here given are not attained on a working scale :—

Name	Gross yield per acre	Sugar in 1 gallon of juice	Sugar yield per acre	Working yield of Sugar	
				per ton	per acre
	lb.	lb	lb.	lb.	lb.
German	50,776	1·54	6925	226	4541
Green-neck	67,936	1·42	8496	177	4775
Rose-neck	65,560	1·47	8562	186	4835
Grey-neck	72,072	1·32	8333	152	4417
Vilmorin's	36,168	1·90	6103	296	4144

The following figures show the results of a series of comparative experiments as to the value of different varieties of sugar-beet grown in Saxony, and as far as possible under

the same conditions of manure, etc. The plants were grown in rows of 11 inches wide :—

Variety of Beet	Yield expressed in Centners per Morgen	Sugar in the Beet	Sugar in the Juice	Coefficient of Purity	Yield of Sugar expressed in Centners per Morgen
		per cent.	per cent.		
Kl. Wanzlebener Original ..	228	11·7	12·7	84·0	26·68
Dippe's Wanzlebener Nachzucht	218	12·0	13·6	85·0	26·16
Kl. Wanzlebener Möhringen	216	11·4	12·7	83·1	24·62
Bestehorn's Imperator	210	11·2	12·3	82·4	23·52
Vilmorin blanche améliorée (Original)	183	12·9	14·4	85·8	23·61
Simon Legrand de mères blanches	241	11·7	12·7	83·4	28·20

(Märcker.)

The chief varieties of beetroots at present cultivated in Europe are: Vilmorin white Improved, Kleinwanzlebener (Improved and Vilmorin Nachzucht), Excelsior (white), Imperial (white, old, improved white, rose, improved rose), Simon-Legrand, Florimond, Bulteau-Desprez Richest, Brabant Demesmay, Electoral, Elite (Improved, Improved Imperial), Imperator, olive shaped. The following table gives the results attained on suitable soils :—

—	Percentage of Sugar	Tons of Roots per Acre
Vilmorin improved	16	12 to 16
Kleinwauzlebener	13 to 15	14 to 18
Brabant	12	20
Imperial	14	14 to 18

The collet vert (Brabant) and collet rose, give heavy crops, but owing to lower sugar content are more suitable for beetroot distilleries.

Durran affirms that beets which run to seed in their first

year are less valuable than those which are biennial. This running to seed is the result of certain external causes, e.g. beets sown earlier in the year exhibit this tendency more strongly than those sown later. It may also result from a hereditary disposition of the plant. The sugar-beet is a biennial, as the result of cultivation; in the natural state it is an annual. Hence this tendency to run to seed in the first year on the part of the sugar-beet may be considered as a case of atavism, i.e. a return to the characteristics of the primitive race. It is probable that this can be diminished, or even avoided, by a rational selection, i.e. by the elimination of individuals which have the tendency to seed in the first year. The following facts have been noticed: (1) The exposure of young plants to cold night air favours this atavism; (2) plants from small seeds exhibit this tendency more strongly than those from large seeds; (3) variation in the depth of sowing does not appear to have much influence; (4) any check on the growth of the plant, at whatever period of its development, increases the atavic tendency; (5) by a continuous series of selective experiments, always choosing seed from annuals, in five years an entirely annual crop was obtained, from which it has been concluded that the abnormal phenomenon of sugar-beets becoming annual is reproduced constantly and regularly. Certain plants, in their second year even, do not run to seed, but develop just a tufted ring of leaves. These plants the growers call *trotzer*. Seed from these plants, instead of producing new *trotzer*, give rise to normal triennial sugar-beets, which are as good and as rich in sugar as those obtained from normal seed.

Composition of the Roots.—Internally, the beetroot is built up of a number of concentric rings, formed of a much larger number of small cells, each of which is filled with a juice consisting of a watery solution of many bodies besides sugar. These include several crystalloid salts (most of which are present in minute traces only), such as the phosphates,

oxalates, malates, and chlorides of potassium, sodium, and calcium, the salts of potash being by far the most important; and several colloid bodies (albuminous [nitrogenous] and pectinous compounds): as well as a substance which rapidly blackens on exposure to the air.

The sugar present in fairly ripe beets is crystallisable, and, when perfectly pure, identical in composition and properties with crystallised cane-sugar; but it is more difficult to refine this sugar so as to free it from the potash salts, and commercial samples have not nearly so great sweetening power as ordinary cane-sugar. Beetroots do not contain any uncrystallisable sugar, and the molasses produced in beet-sugar manufactories is the result of the changes which cannot be entirely avoided in extracting the crystallisable sugar from the roots.

The true mechanism of the formation and storing up of sugar in the beetroot was worked out by A. Girard in 1886 and following years. The sugar is formed in the blade of the leaf under the influence of sunlight, the rootlets taking no part in its production, but serving only to absorb the moisture and nourishing salts of the soil. The sugar formed in the leaf during the day is absorbed by the root during the night, hence the blade and petiole are less charged with sugar in the morning than in the evening.

Incidentally he showed the enormous development of the rootlets forming a mass like a head of hair as much as 2·5 metres in length. This explains the difficulty of replanting the roots after they have reached a certain stage of development, and the reason of the deformity of the roots when this hair-like mass is unable to spread regularly in badly dug soil.

The saccharine values of several kinds of beet grown on the farms of M. Simon-Legrand, at St. Quentin, are shown in the following analyses, by Duror, and indicate what progress can be attained by careful selection:—

	Sugar per cent.
Blanche améliorée	15·00
Rose améliorée	14·776
Blanche No. 1	14·825
Rose No. 1	14·027
Rose No. 2	12·55
Blanche No. 2	11·565
Rose No. 2, lisse (smooth)	11·582
Collet vert No. 3, améliorée	10·473
Jaune de Hesbaye	11·50
Blanche rosée	11·025
Blanche à collet vert	12·787
Rose du Nord	9·76
Gris rosé	10·256

The following selected analyses by Voelcker, of roots grown in various parts of Great Britain in 1868–69–70, are well calculated to give information as to the fitness of the English beet as raw material from which sugar may be profitably extracted on a manufacturing scale.

COMPOSITION OF SILESIAN SUGAR-BEETS GROWN IN THE NEIGHBOURHOOD OF LAVENHAM, SUFFOLK.

	No. 1	No. 2	No. 3	No. 4	No. 5	No. 6	No. 7	No. 8
Description of root ..	Green top, white skin.	Red top, rose-coloured skin.	White pear-shaped root.	Long red root.	Long red root.	Pear-shape white root.	Small red top.	Pear-shape white root.
Weight of root	2¾ lb.	2lb.4½oz.	1½ lb.	2 lb.	1¾ lb.	2 lb 5 oz.	1lb.4½oz.	2 lb. 12½oz.
Specific gravity of juice	1·0637	1·0689	1·058	1·0612	1·0628	1·0589	1·0659	1·0643
At a temperature of ..	64° F.	64° F.	62° F.	62° F.	..	..	58° F.	58° F.
Moisture	83·11	82·72	83·03	83·43	82·70	82·27	81·76	83·34
Albuminous compounds*	1·25	1·44	1·71	1·53	1·23	1·08	2·13	2·12
Crude fibre (pulp) ..	3·43	3·38	4·31	3·49	3·60	3·73	3·77	3·04
Crystallisable sugar ..	10·51	10·94	9·31	10·04	10·72	11·14	10·55	9·74
Pectin, colouring matter, etc. ..	0·63	0·45	0·60	0·50	0·68	0·74	0·70	0·52
Mineral matter (ash)	1·07	1·07	1·04	1·01	1·07	1·04	1·09	1·24
	100·00	100·00	100·00	100·00	100·00	100·00	100·00	100·00
* Containing nitrogen	0·200	0·231	0·275	0·245	0·197	0·173	0·341	0·340

These analyses may be taken as fairly representing the composition of English sugar-beets of good quality. It will be noticed that in Suffolk roots, in 1868, contained from 9¾ to 11 per cent. of sugar, in round numbers. In the second table are placed together the results of analyses made of Silesian beets, grown in 1868, in the counties of Norfolk, Berkshire, and Buckinghamshire.

The roots grown in Norfolk, Berkshire, and Buckinghamshire contained from 9 to 11 per cent. of sugar, and thus were well suited for the manufacture of sugar.

COMPOSITION OF SILESIAN SUGAR-BEETS GROWN IN NORFOLK, BERKSHIRE, AND BUCKINGHAMSHIRE.

	No. 1	No. 2	No. 3	No. 4	No. 5	No. 6
Kind of root..	Small white	Large white	Red	White	Red	White
Weight of root	1 lb.	2 lb.	1lb. 13oz.	2 lb. 4 oz.	2 lb. 9 oz.	2 lb. 14¾ oz.
Specific gravity of juice	1·059	1·0558	1·0558	1·0465	1·0659	1·0588
At a temperature of ..	60° F.	60° F.	64° F.	64° F.	62° F.	62° F.
Moisture	84·32	85·22	85·23	86·71	82·35	83·93
Albuminous compounds *	1·28	1·51	1·70	2·13	1·55	1·76
Crude fibre (pulp) ..	3·51	4·11	2·92	3·13	3·25	3·21
Crystallisable sugar ..	9·42	7·46	8·86	6·67	11·09	9·31
Pectin, etc.	0·48	0·55	0·47	0·50	0·52	0·63
Mineral matter (ash) ..	0·99	1·15	0·82	0·86	1·24	1·16
	100·00	100·00	100·00	100·00	100·00	100·00
* Containing nitrogen	0·206	0·243	0·273	0·341	0·248	0·283

ANALYSIS OF LAVENHAM BEET PULP.

Moisture	70·11
*Albuminous matter..	2·25
Sugar	3·39
Mucilage, etc.	1·93
Digestible fibre	15·13
Woody fibre	5·32
Ash (mineral matter)	1·87

* Containing nitrogen .. 0·361

In a paper read before the Liverpool Society of Chemical Industry, G. Shack-Sommer stated that in 1879 a select committee of the House of Commons was appointed to inquire into the effects produced upon the Home and Colonial sugar industries of this country by the bounty system in foreign countries manufacturing sugar for exportation. James Duncan gave evidence that this country was adapted to the

growth of beetroot, but that the disadvantage of growing was owing to the bounty system. George Martineau had grown roots in Lincolnshire and the Isle of Thanet, in the latter case roots containing 15 per cent. of sugar, a richness above the average obtained in France. A comparison between results obtained from roots grown at Wavertree and near Wexford with those from roots drawn on the same day by F. Otto Licht, of Magdeburg, proves that this country can produce sugar beetroot quite as well as on the Continent, and at rates remunerative enough for successful competition.

An average sample of 17 roots grown for Shack-Sommer in county Wexford, Ireland, in 1890, gave the following results :—

Specific gravity of juice at 60° F.	1·0745
Degrees by Brix saccharometer	18·02
Quantity of sugar in 100 parts	14·64
Quantity of non-sugar in 100 parts	3·38
Including mineral matter	1·03
Quotient of purity	81·24

The average weight of the trimmed roots was 839 grm. (about 29 oz.).

Experimental beetroot growing in the British Isles has continued down to the present time, and the published results show that roots are grown which when trimmed weigh from 800 to 900 grm. (28 to 32 oz.), yield a juice of from 18·5 to 20° Brix and of a purity of 85·5 to 87 or 88, and give about 16 tons of roots to the acre.

Wiley states that the average yield per acre of beets in the United States does not reach 10 tons, and it is not likely that the average will be increased, until fertilisers are abundantly supplied and more scientific forms of agriculture practised. The average richness in sugar of the beets grown during the year ended May 31, 1900, was 14·5 per cent., and the coefficient of purity is at almost the lowest limit permissible for good results in manufacture. A coefficient of purity less than 80 is considered extremely poor. The actual number of

acres harvested was 105,175 and the average yield of beets per ton of 2000 pounds was nearly exactly 8 tons per acre (794,658 tons).

The table below shows the comparative cost of 1 cwt. of sugar made in Germany and in France in 1889–90 according to the calculation of Herbertz. It is assumed in each case that 1·10 mark is paid per cwt. of beetroots.

Cost of	In Germany		In France	
		Marks		Marks
Beetroot ..	1·10 × 7·95 =	8·74	1·10 × 8·56 =	9·41
Fuel	=	1·52	=	1·41
Labour ..	=	0·58	=	0·81
		10·84		11·63

Or an advantage in favour of Germany of 0·79 mark or 9*d.* per cwt. of sugar.

From an analysis of the results of 33 German factories by Glantz, the average price of roots works out at 0·88 mark, and the cost of manufacture at 0·387 mark per cwt. of roots, the average yield of sugar being 13 to 14 per cent. The cost of manufacture is not measured by the size of factory, several small factories working below the average and several large ones at as high or even a much higher figure. The average for the five years ending 1901–2 are: cost of roots per cwt. 0·94 mark, cost of manufacture per cwt. of roots 0·42 mark.

Climate.—The mean temperature of the Continental beet-growing districts, and of those localities in England where beets may be successfully cultivated for sugar-making purposes ranges from about 16½° to 18° C. (62° to 65° F.). The formation of the sugar is favourably influenced not so much by heat as by dry weather and unclouded sky during the autumn months. Hence the root succeeds far better in the north of France and of Germany, than in central France or southern Germany, where the summers are very much warmer and longer. Hence also the prospects of remunerative culture of the plant in Canada, the United States, and

New Zealand, and the failure attending efforts to introduce it into Australia.

Observations show that a bright and dry August favours an increased secretion of sugar in roots to a far greater extent than a hot summer; and nothing is so conducive to heavy crops as an abundance of rain distributed over the first 2 months' growth of the plant. It would thus appear that the eastern, south-eastern and northern counties of England together with many localities in Scotland, and a portion of Ireland, are, so far as climate is concerned, well suited to the cultivation of beet as a sugar-yielding crop.

Soil.—Although beet will grow in a great variety of soils, all are not equally well adapted to grow this crop to perfection. The best soils are those in which neither clay, nor sand, nor lime greatly preponderates, but which contain these constituents, together with a fair proportion of organic matter so mixed together that the land is neither too stiff nor too light, and crumbles down, after being ploughed, into a nice friable loam. There should be a sufficient depth of soil, for all soils incapable of being cultivated to a depth of at least 16 inches are unsuited for the growth of sugar-beet, which, unlike the common yellow globe mangold, grows almost entirely underground, and therefore cannot be cultivated with advantage in shallow soil. The subsoil should be thoroughly well drained, and be rendered friable by autumn cultivation and free admission of air. A deep friable turnip-loam, containing a fair proportion of clay and lime, on the whole appears to be the most eligible description of land for sugar-beets. Lime is a very desirable element, for, in land deficient in lime, beets are liable to become fingered-and-toed. When well-worked, clay soils, especially calcareous clays, are well adapted for beet cultivation, provided they are properly drained, and of sufficient depth. On such soils, a succession of beetroots may often be grown without manure, for many clays abound in all the elements of fertility. These, however,

require to be rendered available for the use of plants. The most effectual means of thus providing plant-food are deep autumn ploughing, stirring of the sub-soil, and similar mechanical operations, all of which tend to bring into action the fertilising materials which lie dormant in many clay soils in practically inexhaustible store, and which, at the same time, improve the texture of the land, rendering it more friable and more readily penetrable by the roots.

Many persons entertain the mistaken notion that clay soils are not suited for the cultivation of beets, and that the crop will only flourish in light sandy soils. Some of the finest crops of beet are grown on clay soils, and some of the worst crops on light sandy land. It is true a badly-worked, half-drained clay soil does not raise beet to perfection; but even stiff clays when well drained, may be brought into a fine friable condition, when the land is broken up by the cultivator early in autumn, left in ridges as roughly as possible during the winter, and not touched until the season of sowing the seed arrives, when it suffices to pass a pair of harrows over the land. The land in general is much improved by deep autumn cultivation and exposure to the air in a rough state; and, according to the testimony of the most successful heavy-land farmers, it is far better never to touch the land after it has been put roughly into ridges, than to give it a second ploughing in spring.

On light, sandy soils, beetroots grow well, if the land is in a good agricultural condition; sandy soils, however, are poor in plant-food, and not well adapted for the cultivation of sugar-beets. It is true, such poor, sandy soils may be enriched by the application of dung or other suitable manures; but as it is not desirable to grow sugar-beets on newly-manured land; poor sandy soils, which will not yield a moderate crop without manure, are not nearly so suitable for beets as soils which contain naturally a larger proportion of the mineral elements which enter into the composition of the ash of beet.

Peaty soils and moorland produce watery spongy roots, poor in saccharine matter; they ought to be avoided, as well as all soils which are either too dry, like the thin gravelly soils resting on pure silicious gravel sub-soils, or too wet and cold, like many of the thin soils which are found resting on impervious chalk marl.

Speaking generally, the best soils for sugar-beet are precisely those on which other root crops can be grown to perfection; that is, land which is neither too heavy nor too light, which has a good depth, is readily penetrated by the roots, and naturally contains lime as well as clay, and sand as well as organic matter, in such proportions as in good friable clay-loams.

An analysis of the soil should always be made previous to planting it with a new crop. This is particularly necessary with the sugar-beet, as the salts presented to it in solution in the soil will pass with the juice, and greatly interfere with the processes of sugar manufacture from such juice. Certain soils may be at once indicated as unsuitable for sugar-beet growing on this account; they are clover land, recent sheep pastures, forest land grubbed during the preceding 15 years, the neighbourhood of salt works, volcanic and saline soils of all kinds.

Manures.—If possible, sugar-beets should be grown with as little farm-yard manure as possible; and when dung has to be used, as in the case of very poor soils, care should be taken to apply it in autumn, or as early as possible during the winter months.

Heavy dressings of common farm-yard manure, such as are generally applied to land upon which mangel-wurzel is grown for feeding purposes, must not be employed if the land is intended for sugar-beets.

The effect of heavy dressing of dung, and of all animal nitrogenous matters, as well as of ammoniacal salts, is to produce abundance of leaves, and big but watery and often

hollow roots, which latter are not only comparatively poor in sugar, but also contain nitrogenous matters, which greatly interfere with the extraction of sugar in a crystallised state.

Common salt, and saline manures in general, although useful when used in moderate doses, say at the rate of 2 or 3 cwt. per acre on light soils, should be avoided on the majority of soils, for experience has shown that sugar-beets grown on soils highly manured with common salt, produce roots whose expressed juice is largely impregnated with salt, a constituent which is dreaded by the manufacturer of sugar even more than the albuminous impurities of the juice.

Peruvian guano, sulphate of ammonia, and nitrate of soda require to be used with discrimination. If the land is in a good agricultural condition, in which it always contains a sufficient amount of available nitrogen to meet the requirements of the crop, neither guano nor sulphate of ammonia should be used as a manure for beets. It is true guano and sulphate of ammonia largely increase the weight of the produce per acre ; but at the same time, it has to be borne in mind that heavy crops, produced by the aid of guano and purely ammoniacal manures, generally are poor in sugar. Beets grown with an excess of guano or sulphate of ammonia moreover, furnish a juice that presents much difficulty to the sugar manufacturer.

If the land is very poor naturally, it will be found necessary to manure it ; and if farm-yard manure cannot be obtained in the required quantity, and be applied in autumn, it may be desirable to use some guano or sulphate of ammonia. In that case 3 to 4 cwt. of Peruvian guano, or 2 cwt. sulphate of ammonia, mixed with 2 cwt. of superphosphate of lime per acre, may be sown broadcast in autumn ; and when the seed is sown in spring, 2 cwt. more of superphosphate may be drilled in with it.

Superphosphate of lime and bone-dust, or the refuse bones of glue-makers, are excellent manure for sugar-beets, and

other phosphatic manures are suitable for every description of land; they never injure the quality of the beet-crop, like the indiscriminate use of ammoniacal manures; on the contrary, superphosphate decidedly favours early maturity, and for this reason many would never sow a crop of beets without drilling in at the same time 2 to 3 cwt. of superphosphate.

On light soils, in which potash is often deficient, the judicious use of potash salts has been found serviceable. The salts of potash, however, should not be used by themselves, but always in conjunction with superphosphate and phosphatic guanos; for such soils, 3 cwt. of superphosphate, 2 cwt. of crude sulphate of potash, and 1 cwt. of sulphate of ammonia, or 1½ cwt. of Peruvian guano, have been found very useful for common mangolds, and no doubt this mixture would be equally good for sugar-beets.

Analyses of sugar-beet ash shows that this crop takes from 1 acre of land:—

	lb.
Potash	161·92
Nitrogen	105·60
Phosphoric acid	40·48
Lime, etc.	31·68

In illustration of the injurious consequences of a heavy spring dressing of dung for sugar-beets, the annexed analyses may be given, representing the composition of two very large white Silesian beets grown in Suffolk:—

	A	B
Weight of root	11 lb. 6 oz.	6 lb. 8 oz.
Specific gravity of juice at 18° C. (165° F.)	1·0431	1·0553
Moisture	92·58	88·13
Albuminous compounds*	1·40	2·16
Crude fibre (pulp)	1·73	2·74
Crystallisable sugar	2·22	4·82
Pectin, etc.	0·47	0·44
Mineral matter (ash)	1·60	1·71
		100·00
* Containing nitrogen	0·225	0·347

According to the observations of Ferdinand Knauer, the alpha and omega of beet-growing is to get the roots ripe ; and from this point of view the manure has an important influence, especially Chili saltpetre and Peruvian guano. Rapidly developed under the influence of these manures in the spring, the plant is manured in September ; but with farm manures and a dry summer, the manure remains undecomposed until the autumn ; then with moist weather the root quickly develops, forms luxuriant leaves, attains a great weight, but becomes saline, rich in pectin, and poor in sugar. If, however, the farm manure be added in the autumn, the crop is increased without such a serious falling off in quality. Professor Märcker, of Halle-sur-Saale, confirms these veiws.

As to the influence of potash salts on beet-roots, Professor Märcker has arrived at the following conclusions by collecting and averaging the results of many authors. Most cases indicate an increase in quantitative yield, but a falling off in quality of the crop, and this is especially the case with potash containing chlorides. The percentage of sugar is perceptibly lowered. This latter evil effect may, however, be diminished by manuring in the autumn. Cases have been known in which the saccharine richness has been improved by the use of potash salts. Its use is recommended for soils yielding very poor beets, for marshy soils, and for soils rich in humus.

Sowing.—The best time for sowing beetroot is the beginning or middle of April. If sown too early in the spring, the young plants may be partially injured by frost ; and if sown later than the first week in May, the crop runs the risk of requiring to be taken up in autumn, before it has had sufficient time to get ripe.

From 10 to 12 lb. of seed, or about double the quantity of seed usually sown for common mangolds, is the quantity of seed required per acre. Much more seed is sown, because sugar-beets are planted more closely than common mangolds. As regards the width between the plants, generally speaking,

the distance between the rows and from plant to plant should not be less than 12 inches, nor greater than 18 inches.

Should the young plants be caught in spring by a night's frost, and suffer ever so little, it is best to plough up the crop at once and to re-sow, for plants attacked by frost are certain to run to seed, and beets that have run to seed are practically useless for the manufacture of sugar.

Like root-crops generally, sugar-beets require to be frequently horse- and hand-hoed. As long as the young plants are not injured by hand-hoeing, the repeated application of the hoe from time to time is attended with the greatest benefit to the crop. It is advisable to gather up the soil round each plant, in order that the head of each root may be completely covered with soil. Champonnois' researches point strongly to the advantages to be derived from planting in ridges, by which the supply of air to the roots is greatly facilitated.

As the operation of thinning sugar-beets is quite a laborious one, the U.S. Department of Agriculture has been considering the production of single germ seeds instead of the pods containing several seeds. Many of these single germ seed pods have been secured from the best varieties, and the results are reported to have been very satisfactory. Thirty per cent. of the selections produced seeds with single germs, and it is thought that within three or four years a regular strain of single germ seeds can be produced, which will very largely reduce the agricultural cost of the beets. Thinning the beets alone is estimated to cost about $6 per acre.

On the Continent, minute attention has been given to a study of the conditions best calculated to ensure the roots possessing the characters previously described as being the most desirable from a sugar-maker's point of view. They are chiefly as follows :—

1. Not to sow on freshly-manured land. The manures should be applied before the previous winter, so as to become

well mixed with the earth. It is eminently preferable not to manure the land at all for the beetroot crop, but to manure heavily for wheat in the preceding year, and let the beet follow as a second year's crop.

2. Not to employ strong forcing manures, such as nitrates, and especially not to apply liquid or pulverulent manure during growth. Sheep must never graze on beetroot land.

3. To use seed from a variety rich in sugar.

4. To sow early, in lines 16 inches apart at most, the plants being 10 to 11 inches from each other. There will thus be 38,000 beets on an acre, weighing 21 to 28 oz. each, or 52,800 to 70,400 lb. of roots per acre.

5. To weed the fields as soon as the plants are above ground, without waiting for them to be choked; to thin out as early as possible, and with great care; and to weed and hoe often, till the soil is covered with the leaves of the plants.

6. Never to remove the leaves during growth.

7. Finally, not to take up the roots, if it can be avoided, before they are ripe, the period of which will depend upon the seasons.

According to Grouven, the depth at which the beet-seed is sown has a great influence on the plant, the failure in the harvest being due to this. Seeds were sown at depths from ½ to 3½ in. At ½ in. in five days the first plant appeared, and in sixteen days there were 24 plants, whilst at 3½ in. there were only seven plants in sixteen days, it taking ten days for the first plant to appear. Walkhoff recommends from ½ to 1 in., whilst Achard advocates a depth of an inch, or half an inch. These limits, however, are not absolute, but depend on the nature of the soil. Fühling recommends that the seed be sown as superficially as possible, but adds that if the soil be light, forming only a thin crust, and drying quickly after rain, the seed must be planted more deeply than if the soil be heavy. These results are confirmed by Wolsey. The distance between the seeds is a more important factor in obtaining

a good harvest, and this also varies with the nature of the soil, and according to Achard it seems that the distance is inversely proportional to the richness of the soil, and this has been confirmed by other observers. Pagnoul has shown that the percentage of sugar is increased by shortening the distance, and whilst the sugar increases the salts decrease. Petermann has shown that all things being equal, lessening the distance between the roots, increased the richness in sugar, and often the weight of the harvest; but, on the other hand, he shows that the opposite effect is produced by passing a certain limit. The space required by each root varies from 15 × 11 to 15 × 10 in., and by reducing it to 13 × 7½ in. the total weight was reduced 37·5 per cent. in one case, and 46 per cent. in another. The distance 15 × 10 causes a diminution in the proportion of water in the root, and so increases the density of the juice, and sometimes the proportion of sugar. The coefficient of purity of sugar, i. e. the ratio of the quantity of sugar to the total soluble matter, is not changed. Schultze planted three crops of beetroot, the distance between the lines being 20, 16, and 12 inches, whilst the distance between the roots was in every case 12 in. The ground was manured with various quantities of sodium nitrate, superphosphate, animal charcoal, Ohlendorf guano, and ammonium sulphate. From the results he concluded that the richness in sugar is highest when the smallest space is given to the roots. His results also show that the injurious effect of sodium nitrate is lessened by lessening the space for each root. The maximum weight of harvest, however, is attained with a distance 16 × 12 inches, there being no increase when the distance between the lines is reduced to 12 inches.

Good seed may be bought of first-class seedsmen, or may be home-raised. In the latter case, the means to be adopted are as follows. Choice is made of the best roots which show least above ground; these are taken up, placed in a cellar or a *silo* (subterranean store), replanted in good soil, and allowed

to run to seed. This seed is already good; but it may be still further improved by sowing it in a well-prepared plot possessing all the most favourable conditions; the resulting plants are sorted, set out in the autumn, put into the cellar, and in the spring, before transplanting, those of the greatest density, and which will give seeds of the best quality, are separated. These are transplanted at 20 inches between the rows and 13 inches apart, and are covered with about 1½ inch of earth. Finally, they are watered with water containing treacle and superphosphate of lime, as recommended by Corenwinder.

Harvesting.—Sugar-beets must be taken up from the soil before frost sets in, or they suffer. When the leaves begin to turn yellow and flabby, they arrive at the stage of maturity, and the crop should then be closely watched, that it may not get over-ripe. If the autumn is cold and dry, the crop may be safely left in the ground for a week or ten days longer than is needful; but should the autumn be mild and wet, it is highly desirable to remove the roots as soon as possible after they arrive at maturity, for if left in the soil they are apt to throw up fresh leaves, and nothing does so much injury to beets as a second growth of tops after the roots have become ripe. Particular attention, therefore, should be paid by the grower of sugar-beets in watching the ripening of the crop. It is a good plan to test the gravity of the expressed juice. A root or two may be taken up at intervals, and be reduced to pulp, by grating it on an ordinary hand-grater. By pressing the pulp through calico, the juice is obtained which is to be tested with an ordinary float used for ascertaining the density of liquids heavier than water. As long as the gravity of the juice continues to increase, when the roots are tested from time to time, the crop should be left in the land. The juice of beets of good sugar-yielding qualities has a specific gravity of about 1·065, and when rich in sugar it rises to about 1·070.

Immature roots cut across with a knife rapidly change colour on the surface laid bare by the knife, turning first red, then brownish, and finally quite dark. If the newly-cut slices of beet turn colour on exposure to the air, the ripening process is not completed; but if they remain for some time unaltered, or turn only slightly reddish, it may be assumed that they are sufficiently ripe to be taken up. By this simple means, the state of maturity may be ascertained with sufficient accuracy for practical purposes. The crop should be harvested in fine, dry weather. In order that the roots recently removed from the ground may part with as much moisture as possible, they are best left exposed to the air on the land before they are stacked, but they should not be left longer exposed to the air than a few days, and need to be guarded against the direct rays of sunlight. Perhaps the best plan is to cover them loosely with their tops in the field for a couple of days, and then to trim them, and at once to stack them.

Storing.—For storing roots, especial care should be taken to prevent their germinating and throwing out fresh tops, which is best done by selecting a dry place for the storage ground. The roots may conveniently be piled up in pyramidal stacks, about 6 feet broad at their base, and 7 feet high. At first, the piles or stacks should be but thinly covered with earth, in order that the moisture may readily evaporate, and subsequently, when frosty weather sets in, another thick layer of earth, not exceeding 1 foot in thickness, may be placed on the stacks. This is essentially the same method as is generally adopted in this country for storing potatoes and mangold.

In continental Europe and in Canada, extra precaution is necessitated by the more rigorous climate. In Southern Russia, the plan illustrated in Fig. 113 is sometimes used. The beets are disposed completely below the surface of the soil, in a trench dug with sharply sloping sides. At a depth of about

15 inches from the bottom, is an openwork floor made of rods, on which the beets are piled to within a few inches of the level of the exterior soil. On the top, and following the apex of the heap, is laid a triangular ridge-piece *a*, for the purpose of keeping the heap and the covering apart, and thus facilitating evaporation. The whole is covered with a layer *b* of straw and fine earth, the thickness of which is varied according to the indications of the thermometer *c* placed in the centre of the mass of roots. Between the floor of the trench and the openwork floor, is an empty space *d*, which is made to communicate with two vertical channels leading to the external air, thus providing a sort of ventilation. The outlets of the ventilating channels can be opened and closed at will, thus aiding in maintaining the desired conditions within.

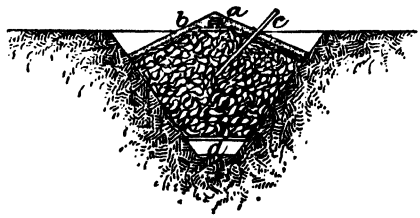

FIG. 113.—RUSSIAN BEET SILO.

The Russians also often employ regular cellars, as shown in Fig. 114. The structure consists of two stories, and is covered with a bed of earth. Each story is furnished with a floor of hurdles or open planking, on which the beets are piled to the depth of about a yard. Lateral passages facilitate ventilation, and openings in the roof permit the heated air to escape. The cost of erecting these cellars is rather heavy, but, on the other hand, there is a great saving of labour in storing the beets, as it suffices to simply pile them up on the floors. Moreover, the arrangement permits of the actual examination of the contents of the cellar, beyond the mere indications of a thermometer, and enables any portion to be removed, even during snowy weather.

Diseases and Enemies.—The insects injurious to beet are principally, the beet carrion beetle, the beet fly, and the silver

Y-moth; they are also subject to the attacks of fungi and bacteria. The millipede (*Iulus terrestris*), the cockchafer (*Melolontha vulgaris*) as a grub, and the winter-sowing owl-mouth (*Noctua segetum*) all attack the root; the following attack the leaves—the black carrion beetle (*Silpha atrata*), the clouded helmet beetle (*Cassida nebulosa*), and the ground or turnip-flea (*Psylliodes nemorum*). The beet carrion-beetle (*Silpha opaca*) was considered to feed only on putrid matter, till 1844, when it was found both on beet in France and on mangold in Ireland. The leaves of the plant were gnawed away till the fibres alone remained, but the roots escaped.

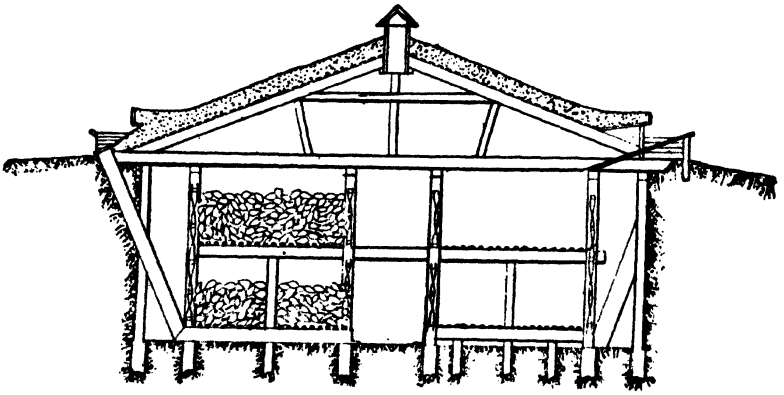

FIG. 114.—RUSSIAN BEET CELLAR.

The egg is commonly laid in putrid matter. The attacks of the grub last from about the third week in May to the end of June; no damage seems to be done by the summer brood of beetles. Remedies are to be found in (1) sprinkling the plants with a mixture of 1 bushel of gas-lime, 1 bushel of quicklime, 6 lb. of sulphur, and 10 lb. of soot, made into a fine powder, and applied in the morning while the dew is on the leaf, this quantity sufficing for about 2 acres; (2) the substitution of superphosphate of lime for farmyard dung; (3) the application of dung, when used, in the autumn instead of the spring.

The beet or mangold fly (*Anthomyia betæ*) damages the crops by the attacks of its voracious legless maggots, which feed on the pulp of the leaves, and reduce them to a dry skin. Their worst effects are seen on peat and fen lands, and in wet seasons. A dressing of superphosphate seems to be effectual.

The silver Y-moth (*Plusia gamma*), extending from Abyssinia to Greenland, and met with in China, Siberia, and North America, occasionally does great damage to the continental beet-crops while in the caterpillar state. It is large, and consumes the leaves very rapidly. Dustings of caustic lime, soot, or salt, as well as drenchings of liquid manure or simple water, are beneficial.

The phenomenon known as the *fatigue betteravière* is a disease which was noticed in Saxony about 1860, at which period much potash was being exported in the form of molasses, and the *fatigue* was naturally attributed to a lack of this substance. The addition of potash salts was tried, but without any beneficial effect. In 1860 Schacht noticed filiform worms on the hairs of the roots, which he found to be nematodes. Kuhn and Liebscher have studied the phenomenon from this new aspect, and find that the intensity of the disease is proportional to the number of nematodes. Thus the *fatigue* can no longer be directly attributed to the mere absence of potash. But as the result of numerous experiments, Prof. Märcker has come to the following conclusions: (1) When the *fatigue* is not too intense, good results may be obtained from the use of potassium salts, these latter strengthening the roots, and so enabling them the better to withstand the attacks of the nematodes. (2) It is probable that roots obtained from fields suffering from the nematodes, and possessing the property of keeping in only a weak degree, may be improved in this respect by addition of potash. (3) It is doubtful if very intense *fatigue* can be overcome by the use of potassium salts.

The symptoms of this disease are very marked. The

leaves, especially the young ones, become covered with a grey lilac powder, then dry off, and die. This is followed by death of the plant in the case of most of the roots attacked. The lilac powder is due to the conidia of a fungus (*Peronospora*). This beet *Peronospora* has been studied for some years by Prof. H. Schacht, of Bonn, and has been called by Fuckel *P. Schachtii.* It has already caused great havoc in various parts of Germany, but has not long been known in France, and is not included in Cornu's list in French *Peronosporeæ.* Like all *Peronosporeæ*, it has a mycelium which develops in the interior of the nourishing plant—ramifying, but without transverse partitions. It has, moreover, suckers which penetrate into the cells and ramify in tufts in their interior. In the case of *P. Phytophthora*, which infests the potato, one cannot find any oospores or hibernating spores, and it is probable that there are none. In the potato the mycelium winters in the tubercle, and the parasite can thus perpetuate itself from year to year without hibernating spores. In the beetroot *Peronospora*, Prillieux has found the oospores in abundance on the dead leaves of the affected beets. He says they resemble those of the *Peronospora* of the vine. They are globular, and have a thick white integument. The oogonium which surrounds them is slender. Thus it is by the leaves that the disease is propagated from year to year, and care should be taken not to allow diseased leaves to get amongst the manure used for preparing the ground for a new crop.

The male nematode (*Heterodera Schachtii*) has an actively mobile slender cylindrical body about 1 mm. in length. The female is about the same length and in shape like a lemon. The larvæ bore into the youngest and finest roots, and are reproduced at an astounding rate, each female producing about 300. It is almost impossible to completely exterminate them, but their numbers may be reduced by cultivating plants which are nemotode free such as the *Solanaceæ*, particularly potatoes and tobacco.

It has also been proposed to grow other plants than beet-root to which nematodes attach themselves, and then to dig up these trap plants. Girard recommends a strong dose of carbon bisulphide, as much as 300 grm. per metre. It is also of advantage to sprinkle the leaves with a solution of 3 per cent. of sulphate of copper and 3 per cent. of lime.

Heart rot, indicated by a crumpling of the youngest leaves, is caused by the fungus *Cladosporium putrefaciens*. The mycelium spreads in the upper surface of the leaves, and causes a great diminution in the sugar yield.

Various rod, coccus and ellipsoid forms of bacteria cause the disease known as bactèriosis of the beet. This is recognised by a shrinking and browning of the root, the flesh of which finally becomes converted into a brown viscous fluid.

According to Briem, dry rot is induced by excessive heat and drought and bad conditions of soil. In it the protoplasm of the cells becomes shrunk and discolored.

CHAPTER XIII.

EXTRACTION OF THE JUICE.

Purchase.—In the beet-sugar industry it seldom or never happens that the manufacturer grows the whole quantity of beet which he works up, though he almost invariably raises a considerable proportion. The basis upon which the manufacturer purchases from the grower is obviously a matter of paramount importance to both. It is to the interest of the manufacturer to base his payment upon the quantity of sugar delivered to him in the form of roots, rather than upon the weight of the roots themselves, as it has already been shown that large roots contain proportionately less sugar and more saline impurities than those of less size. To buy and sell on the weight of the roots is unfair to both, as taking no account of the quality of the article, and removing all inducement to the cultivator to grow the most highly saccharine kinds of root. But to make an average analysis of a crop of beet would be a long and very inconvenient process. It has been found, however, that the juice of the beet is denser according as it is richer in sugar and poorer in other salts. It has therefore been customary to base the value on the density of the juice, taking for foundation a density of 1·055 called 5·5 degrees, and raising the price proportionally above this figure. It has in like manner been suggested that the price should be subject to a corresponding reduction for juice below 5·5°, but this is generally deemed unfair to the grower, as it would only arise through unpropitious seasons and other causes not within his control.

The "Société Centrale d'Agriculture du Pas-de-Calais" proposes the following scale:—

Density	Sugar Yield	Price	
		Per 1000 Kilos	Per Ton
sp. gr.	per cent.	fr.	*s. d.*
1·045	8	16	12 10
1·050	9	18	14 6
1·055	10	20	16 2
1·060	11	21	17 0
1·065	12	22	17 10

An objection to this scale is that the progressive value is not geometrically increased with the greater richness, whereas it is known that the yield of sugar is augmented disproportionately in the case of rich juice. Thus, for example, to produce 100 lb. of sugar will require

1333 lb. of beetroot at 12½ per cent.
1593 ,, ,, 11 ,,
2213 ,, ,, 9 ,,

in other words, while 620 lb. are needed to compensate for the difference between 9 and 11, only 260 are necessary to counterbalance that between 11 and 12½.

The "Comité Central des Fabricants de Sucre" took 5·5° as a basis with 2 per cent. reduction per tenth of a degree from 5·4° to 5° and 4 per cent. from 4·9° to 4·5°, the lower limit; 2 per cent. increase per tenth of a degree above 5·5°.

There is no table officially accepted indicating the real value of the beetroot per degree, and the increase or decrease in value with the variation in density; but the sugar committees have agreed to adopt a series of average prices.

The older tables in use in France have become obsolete since the improvement in the quality of the beet due to the effect of the law of 1884. The following figures are taken from a table drawn up by Pagnoul in 1886 from analyses made at the Station Agronomique du Pas-de-Calais:—

Density Degrees	Sugar per 100 c.c.	Coefficient	Sugar per cent. on Beetroots
4·5	8·7	1·93	7·9
5·0	10·3	2·06	9 3
5·5	11·9	2·16	10·7
6·0	13·2	2·20	11·8
6·5	14·4	2·21	12·8
7·0	15·7	2·24	13·9

The third column shows that the figure of 2, adopted as coefficient by which to multiply the density in order to obtain the sugar content, is only approximate within very narrow limits.

When the roots themselves are delivered at the factory, after having been deprived of their leaves, rootlets, and necks (the portion growing above ground), they are received by an overseer, who weighs them, and estimates the "tare" which is to be deducted for earth, badly trimmed necks, and other useless matters. Importance is lent to the operation by the fact that this weight is the basis of taxation of the industry. Where the manufacturer is his own grower, and where the taxation is based upon the out-turn of sugar, the weighing is only useful for purposes of comparison.

When the crop is paid for according to the density of the juice, a certain number of roots are selected as a sample, their pulp is rasped up, and the juice is expressed, and tested by a hydrometer. Several instruments have been devised for rapidly dealing with sufficient roots for this purpose. That of Possoz is shown in Fig. 115; it consists of a conical bronze auger *a* furnished with teeth and rotated alternately to the right and left by means of a screw-nut *b*, which is held in the hand, and passed backwards and forwards along the stem *c*. The centre of the root is pressed against the revolving auger, which latter rasps out several cubic inches of pulp into any convenient receptacle.

Violette's apparatus for the same object, which may be

fastened upon a table, is composed of a little bronze rasping drum, with saw-blades about 2 inches in diameter, against which the sample slices are thrust mechanically. The pulp falls into a little bronze vessel with perforated sides, in which works a piston, actuated by an iron eccentric, driven by the same wheel that gives motion to the rasper. In a few seconds it affords juice enough for a test.

The drill rasp of Keil and Dolle consists of a hollow steel cone forming a rasp with three slots through which the rasped pulp enters the cone. The cone is attached by a bayonet

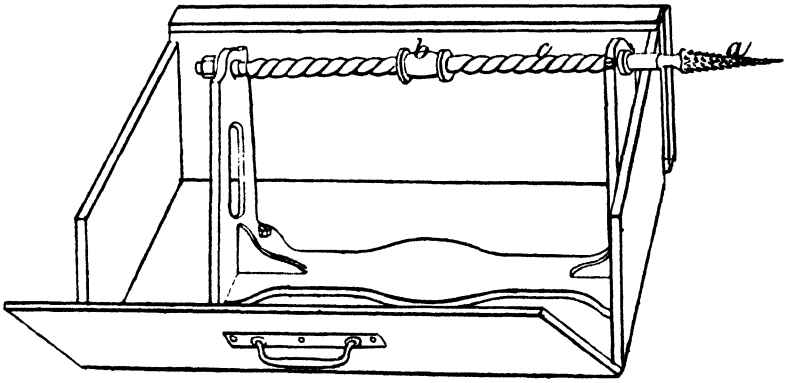

FIG. 115.—POSSOZ'S BEET RASPER.

joint to an axle, also hollow, and inside which fits closely a small disc supported by a rod fixed within the cone. The rasp being set in motion, the beetroot to be analysed is pressed gently against it, so that a hole is pierced from side to side of the root at a quarter of the height below the neck. The pulp is received in the hollow of the axle, and is withdrawn on removing the rasp, being drawn out by the disc. This pulp is collected in a basin, the part nearest the disc being rejected as coming from the previous rasping. Thus the necessity of cleaning the apparatus every time is obviated. The sample of pulp thus obtained is weighed for analysis.

Hanriot's or Lindeboom's apparatus cuts a small cylinder by a sort of punch. From the cylinder of beetroot Pellet cuts a piece of constant length by means of a knife with two blades adjusted at a suitable length apart. The extreme differences in weight of such pieces was not found to differ more than 0·35 per cent., a negligible amount, and these need

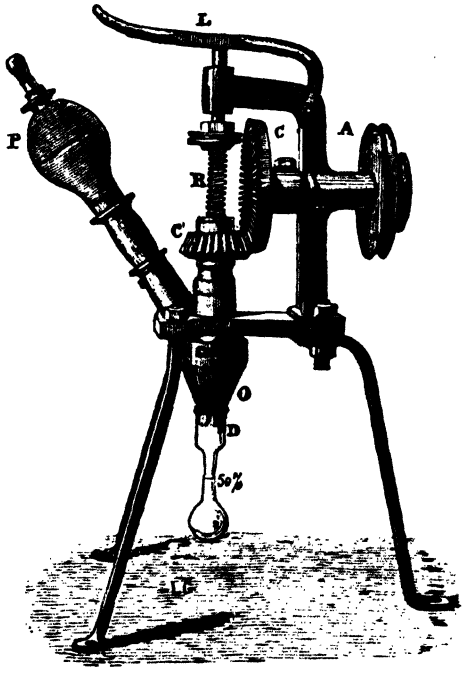

FIG. 116.—HANRIOT'S PULPER.

not therefore be weighed. The sample is analysed by Pellet's method of instantaneous aqueous diffusion in the cold by aid of an apparatus constructed by Hanriot, Fig. 116.

It consists of a conical bronze box in which works a conical rasping drum of the same angle, making 1200 to 1500 revolutions per minute. At the side of the box is a tubulure inclined at 45° and of a diameter equal to that of the cylinders of beet-

root to be analysed. The cylinders are pressed against the rasp by a steel tube surmounted with an indiarubber ball filled with 40 to 80 c.c. of water. As soon as the tube is pushed home, the ball is pressed, and the water washes the pulp into a flask placed below to receive it.

The conical rasp of Pellet and Lomont, Fig. 117, cuts a wedge of 30° from the whole length of a beetroot.

Achille Thomas et Cie., of Lille, also make a little analysing table, with a rasping drum, and an open press, but suitable only for the examination of whole roots, and not for sample slices.

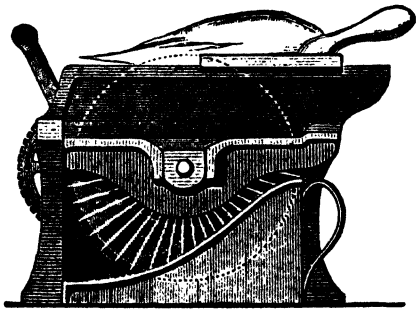

FIG. 117.—PELLET AND LOMONT'S RASP.

Transport.—The transport of the beetroots from the fields to the factory may be performed by rail, road, or river, where such facilities exist; but the rope tramway system presents many advantages over all others, as it abstracts nothing from the land under cultivation, is very cheap, and can be moved about from field to field, or from farm to farm, as circumstances require. It has been further described on pp. 81–83.

The labour, cost, and difficulty of conveying enormous quantities of roots to the factory, where the juice only is to be utilised, have caused attention to be turned to means of transporting the juice alone.

A few years since, Linard, of Cambray, introduced a plan

of sending the juice to a central factory by means of an underground system of piping, which is rapidly gaining favour in France and Belgium. A single factory is thus enabled to work up what would otherwise have to be distributed among several factories, effecting at the same time great economy of transport, fuel, plant, and labour. In outline, the plan is as follows. The juice, obtained by any of the methods to be described later, is received in gauge-tanks, treated with 1 per cent. of lime, and pumped into the cast-iron subterranean conduit, capable of withstanding a pressure of 15 atmospheres, and of a diameter (varying with the distance) of 2½ to 5 inches. The juice is received at the central factory in large store-tanks. There is no apparent effect upon the pipes after several years' constant use. The set at Cambray takes the juice produced by 10,250 acres of beet.

The pump employed by the firm of Fives-Lille, is shown in Fig. 118. The depulpified and limed juice passes by *a* into the filter *b*, thence to the pump *c* by the pipe *d*. The plunger *e* of the pump is worked by the elbow shaft *f*, to which is also attached the piston of a water-pump *g*, used in conjunction with the raspers. The juice is forced into the column *h* by passing the stop-valve *i*. The column *h* is surmounted by a large air-chamber, and provided with a tap *k* and pressure-gauge *l*. The juice finally escapes into the pipe-system by the tube *m*.

The conveyance of beetroots from the carts or the silos to the factory is effected by a hydraulic conveyor, consisting of a channel or gutter of masonry or iron, semicircular in section and with a slight incline. The roots are thrown in and a current of water carries them along, at the same time loosening the attached earth which is then easily removed in the washers.

The slope given to the conduit is 9 mm. per metre where straight, and 10 to 12 mm. at the bends, which have a radius of 250 cm. The width is about 40 cm. and the depth 50.

The water used is taken from the air pump of the triple effect or from the atmospheric pipe, and has a temperature of 35° C. With a flow of 3 cubic metres per minute and the depth of

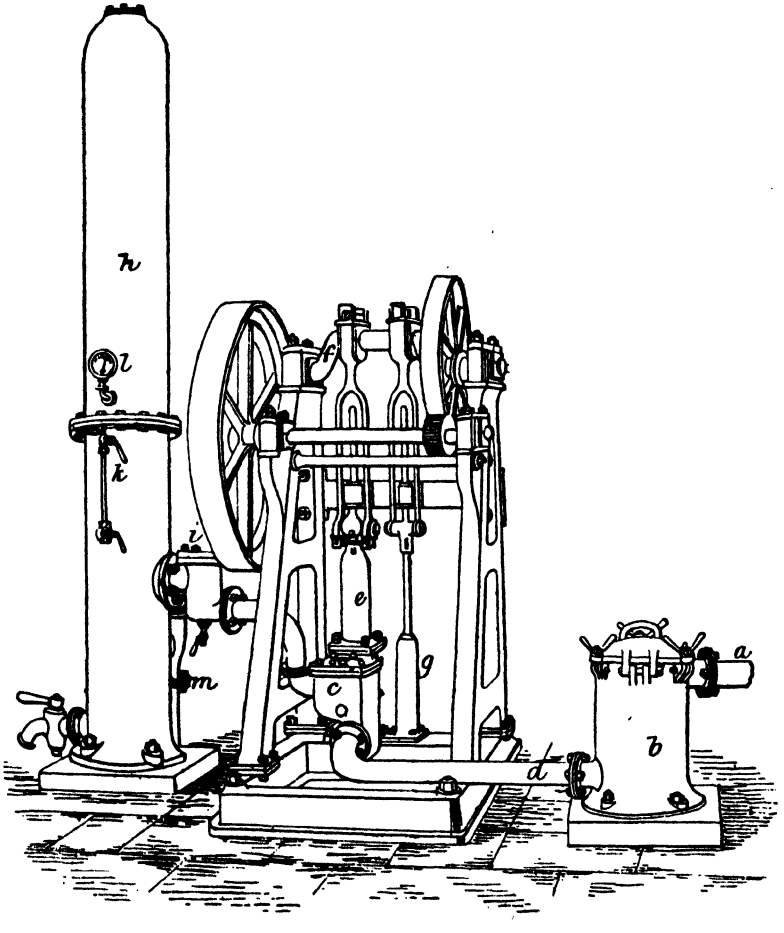

FIG. 118.—BEET JUICE PUMP.

water in the run at 25 cm., 250–300 tons of beets may be carried 130 metres in 24 hours.

There is no increase in the water used by the factory as

the muddy water is allowed to clear in settling ponds and used afresh. The loss of sugar in the beets during transport is negligible. By arranging the beet store and silo over the conduit, as shown below, Fig. 119, a saving of labour is effected.

Cleansing the Roots.—The first step towards extracting the juice from the roots is to free the latter from foreign matters. With this object, the roots are conveyed to a room of sufficient capacity to contain a supply for 2 or 3 days' working, in case of anything preventing a regular delivery

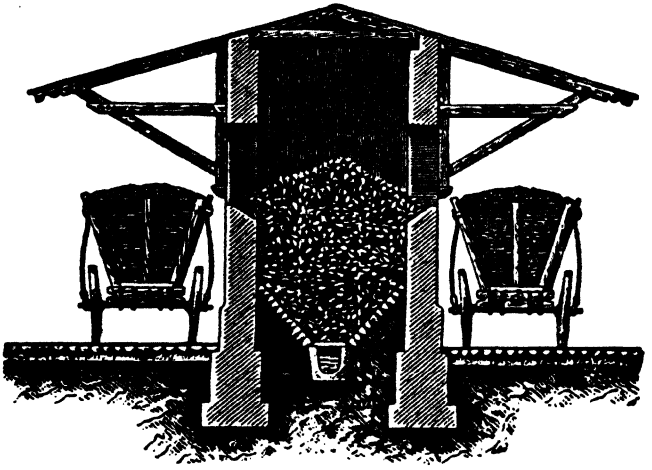

FIG. 119.—BEET STORE AND SILO WITH CONDUIT.

from the cellar or *silo.* When the floor of this room is on a level with the ground floor of the factory, as is usually the case, it is necessary to raise the roots by some means, so that they may fall into the hopper of the washing-machine. The older forms of washers were rotating drums of lattice-work or perforated metal revolving in water. These are now replaced by a fixed trough divided into two or more compartments, with the object of allowing the partially washed roots to remain in contact with cleaner water. The beetroots are raised and moved along by a series of wooden arms helically

arranged on a horizontal shaft which also carries perforated scoops to remove the beetroots, when they reach the end of each compartment. The mud, sand, and stones pass through perforations in the trough into a lower trough, the bottom of which is inclined so as to facilitate removal of the dirt. Where the roots are grown on stony land, they are sure to have stones hidden in the dirt and rootlets, which would soon destroy the knives, unless previously removed. This has led to the introduction of stoning-machines.

The stoner invented by Collas, of Dixmude, and made by Lecointe et Villette, is shown in Figs. 120 and 121. The tank *a* is divided into two compartments by two partitions *b c*, forming between them a right angle, the vertical one *b* constituting a strainer at its upper part, and the horizontal one *c* occupying only about $\frac{2}{3}$ of the length of the box, fixed at a certain distance above the bottom, and having a circular central orifice. Here is placed a horizontal screw *d* with 4 arms similar to those used in navigation. A horizontal grating is provided in the compartment *m* on the left, in prolongation of the horizontal partition, and an inclined grating *e* in that (*n*) on the right, above the vertical partition. The apparatus being filled with water, and the screw set in motion by the bevel-wheels *f*, a circulatory movement is communicated to the water, which rises in the compartment *m*, passes above the strainer, and, traversing the inclined grating *e*, returns to the compartment *n*, and again comes under the influence of the screw. If some beets are thrown into this rapid current in the compartment *m*, the stones rest on the grating or fall to the bottom, while the roots, in virtue of their relatively small specific gravity, are taken up by the current of water on to the inclined grating *e*, and tossed out of the machine by a little drum *g* armed with sloping flanges *h*, and driven by cog-wheels *i*. A trap-door *k* allows the vessel to be emptied of dirty water and of the mud and stones which collect on the bottom. A vertical panel *l* of sheet iron, placed above the

compartment *m*, prevents the beets falling directly on the inclined delivery-grating, and protects the driving gear from splashings of water. The machine is simple, and occupies little room. It is already employed in several factories, being

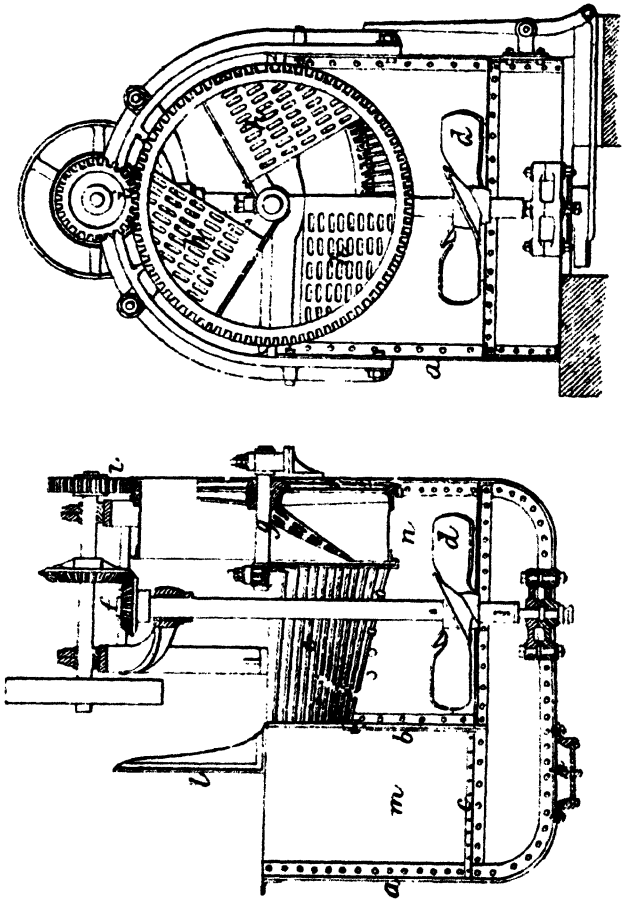

FIGS. 120. 121.—COLLAS'S BEET STONER.

generally placed after the washer, and performing a second washing, which is especially valuable when the diffusion process is adopted.

One of the older forms is the washer, Fig. 122, which

consists of a perforated sheet-iron cylinder *a*, revolving on its axis in a tank of water *b*. In front of the tank is bolted a hopper *c*, into which the beets fall; behind is a strainer. The

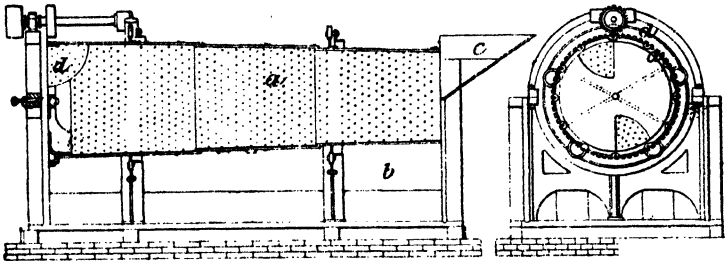

FIG. 122.—BEET WASHER.

cylinder, without its extremities touching the tank, leaves a space of only about ⅓ inch at each end, so that the roots may not get wedged in there. The washed roots are thrown

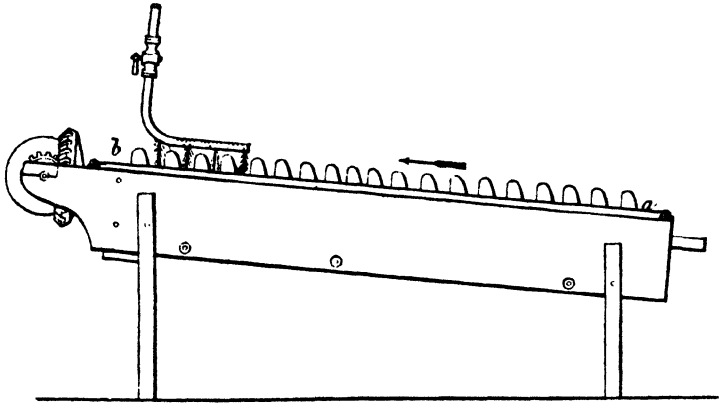

FIG. 123.—BEET WASHER.

out by a helical grating *d* placed at the end of the cylinder opposite to the hopper. The rounded bottom of the tank is inclined towards an opening, by which the whole of the dirt and rootlets accumulated in the operation can be discharged.

Another form of washer is shown in Fig. 123, which is designed to overcome the disadvantage manifested by the preceding, in requiring frequent stoppages, while the water is being changed. It consists of an archimedean screw working in a trough. The beets are fed in at *a*, and are carried by the screw against a descending stream of water in the direction indicated by the arrow, escaping at *b* perfectly clean.

It is now usual to prefer troughs 16 to 20 feet long in which a shaft turns provided with arms arranged helically. In the washer made by Denis Fig. 124, the arms may be set at any desired angle apart, projections on the sleeve of one fitting into

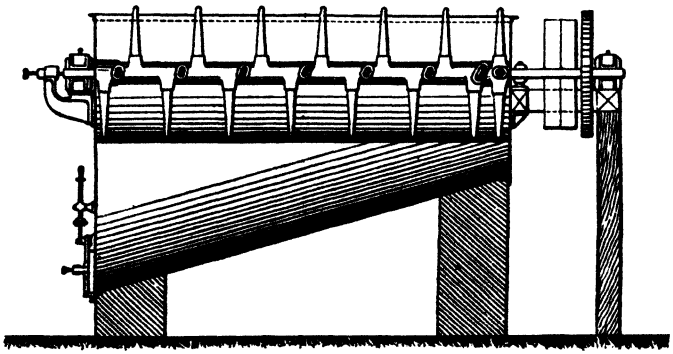

FIG. 124.—THE DENIS BEET WASHER.

sockets of the other, and the whole being held firm by a screw. The dirty water of the washers is emptied automatically by the action of a cam on the end of the shaft on an adjustable lever which opens the sluice, the height to which the sluice is raised at each revolution of the cam being regulated, so that only as much water flows away as is supplied to the washer.

On leaving the washer the beetroots are too wet to be weighed; they are therefore dried, or rather drained, by passing over a mechanical shaker, or by passing over a series of horizontal cylindrical brushes, which, revolving all

in the same sense, convey the roots along, and both dry and clean them. The brushes are formed of whalebone which has been steeped in tannin.

The processes described thus far are of universal application; the stoning and washing of the roots are preliminary operations needful to be performed whatever special mode of extracting the juice may be adopted. But here the parallel ends, and it now becomes necessary to classify the succeeding methods of manipulation. They may be grouped under the following heads: Rasping and Pressing, Maceration, Diffusion; but as the diffusion process is now in general use, brief reference to the others will suffice.

Machines for reducing beet to pulp were of many forms, but they all consisted of a revolving drum armed with saw-blades, against which the beets were forced while the drum was rapidly revolving. The pulp obtained from these raspers was submitted to expression in hydraulic presses, which afterwards gave place to continuous presses. Centrifugals were also tried for separating beet-juice from the pulp, but were found to be inefficient. The short-comings of the expression processes gave an impetus to experiments in other directions, and notably with regard to the dissolving and displacing power of water when applied to the pulp, and hence the Maceration system. The objections to this process were the large quantity of water added, amounting to three or four times the weight of the roots, and the difficulty of keeping a large proportion of the pulp from finding its way into the juice, thus rendering defecation more difficult and imperfect. Walkhoff's revolving extractor was largely adopted in continental Europe, and effected the extraction of the sugar without adding more than 5 per cent. of water on the weight of the beetroot. The success of the diffusion process has more or less led to the disuse of the foregoing methods.

Diffusion.—The principles which form the basis of diffusion process have been already described at length under Cane

Sugar (see pp. 194–207). They remain precisely the same in the case of beet sugar.

The first step in the process is to cut the roots into thin slices, great importance attaching to the thickness of the slices being quite uniform. The machine in common use for the purpose is the same as was invented in 1850 for slicing beets for the hot maceration process. The cleaned roots fall into a hopper, and encounter a plate which turns horizontally, and carries 3 series of steel blades arranged at right angles. The roots are divided into slices of about $\frac{4}{100}$ inch thick and $\frac{40}{100}$ inch wide. With $1\frac{1}{2}$ H.P., this machine is said to slice 100 tons of beet per 24 hours. By using two feed-hoppers, the effect is doubled. The cutting disc is furnished with knife-edges, as shown in Fig. 125.

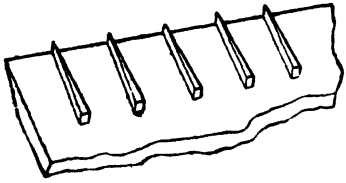

FIG. 125.—KNIVES OF BEET SLICER.

The form of a beet slicer is shown in Fig. 126. A is a conical casting serving to collect the cut slices or chips and support the gearing. E is an arm cast with it to support the bearing for the vertical spindle D which carries the revolving knife-plate C. There are two openings in the cover, one for the feed hopper F, and the other for renewing the knives which require frequent sharpening. The knives are arranged to run in radial slots, and are thus held in position by centrifugal force. The cover is at a distance of 5 centimetres (2 inches) from the plate, and the beetroots are constrained to the annular knife space by two concentric ridges on the cover and plate.

The earlier form of machine is shown in Fig. 127. The cleaned roots are fed into the hopper A and press by their own weight against a series of sets of knives fixed in frames and sunk in the revolving disc, C. The roots are thus sliced into shavings, the form of which depends upon the shape of the knife and the distance of the cutting edge above the surface of

the disc, much as in a carpenter's plane. The chips fall into the receiver F, and are swept out by a slowly revolving arm or vane *f* by the shoot G into the trucks which carry them to the receivers.

The disc is 1·5–2 metres in diameter and makes 60 to 120 turns per minute, and the slices are about 1 mm. thick and 5 or 6 mm. wide. A machine with a plate 2 metres in diameter, 10

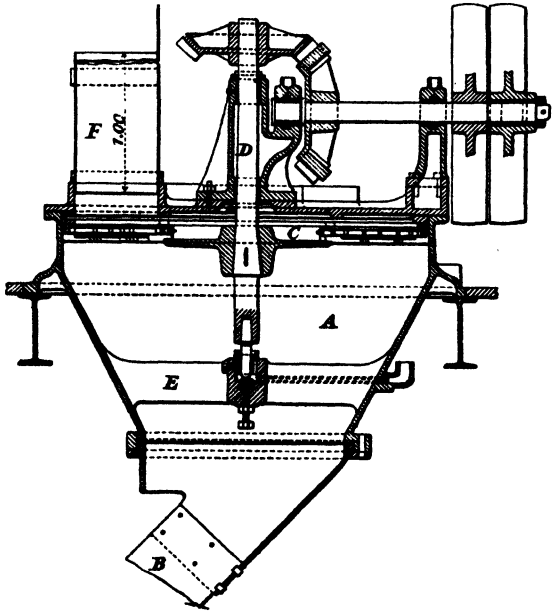

FIG. 126.—BEET SLICER.

sets of knives and making 75 revolutions per minute can work up 800 tons of beetroots in 24 hours.

As the knives rapidly blunt and wear away especially from grit, or when the roots are woody or frozen, they require frequently adjusting in order to secure uniformity of thickness in the slices essential to their complete exhaustion in the diffusion process. The knife or its opposed edge is therefore made adjustable on its seat, the height to which it rises over

the level of the disc and the width of the slot being controlled by a gauge when being reset.

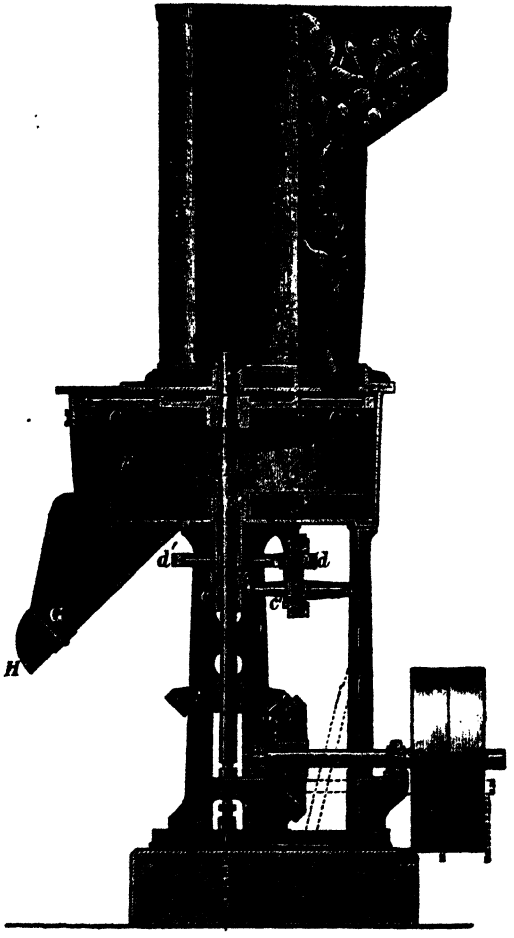

FIG. 127.—EARLY FORM OF BEET SLICING MACHINE.

The various forms of knife have been devised with a view to increasing the surface of the slices and securing a quicker and more complete diffusion. Flat thin slices tend to lie close together and prevent the contact of water with their

surfaces; the form of knife shown in Fig. 129 has therefore been superseded by the Königsfeld knife which cuts a series of zigzags in the root which give V-shaped strips, the grooves

FIG. 128.—KNIFE PLATE.

cut by the knives of one set corresponding to the ridges of the set immediately following, Fig. 131.

Both the above forms of knife make only half cuts completed by the following knife. Complete cuts are made

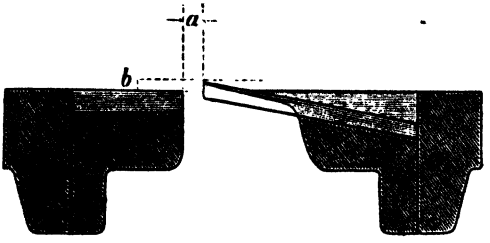

FIG. 129.—KNIFE AND HOLDER.

by the so-called side cutter and the ridge-tile cutter. As the height of the knife above the opposing edge is 5–6 mm., in the latter case it allows small stones to pass without injury to the knife, and yields very uniform chips, Fig. 134.

Hulla's slicer gives chips of the section shown in Fig. 132. These offer a large surface and do not lie too closely together in the diffuser.

FIG. 130.—FINGER KNIFE.

The centrifugal cutter, constructed by Rassmus, presses the roots against the fixed knives by the action of three skewed conical vanes F, Fig. 133, which at the same time turn the roots so as to be cut lengthwise.

The knife holders or frames slip into grooves and need no other fastening, they are consequently readily removed and replaced after the constant sharpening which is essential to securing good chips. The edges of the knives being here all

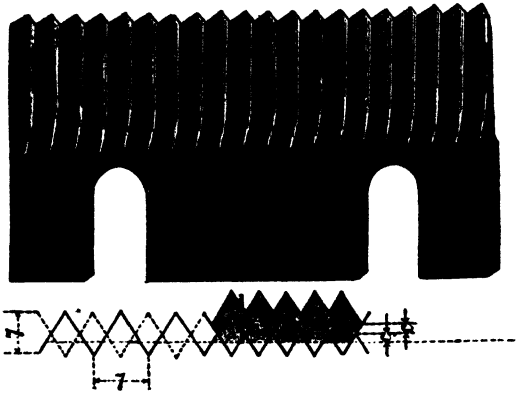

FIG. 131.—KÖNIGSFELD KNIFE.

at the same radial distance cut uniformly, and all the knives are in use at one time. In the disc cutters, the outer knives are moving at a greater speed than the inner ones, and as the hopper is divided to allow room for the gearing and for removal of the knives, only one or two sets of knives are active simultaneously.

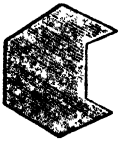

FIG. 132. HULLA'S SLICE.

Maguin overcomes some of these disadvantages by covering the gearing with a hood supported by the hopper, so that the disc cuts on almost its whole surface, and there is an armature which allows the changing of a knife without emptying the apparatus, and a brush moving in the same direction as the disc, but at a speed one third greater, removes any woody matter, fibre or straw which might obstruct the knives.

Robert's diffusion process would seem to amount to only a modification of Dombasle's maceration system, and the

diffusion vessel closely resembles the macerator adopted by Robert for the hot maceration plan introduced by him at Seelowitz, in Moravia. The ribbon-like slices of beet are conducted to large closed vessels, there mixed with the heated

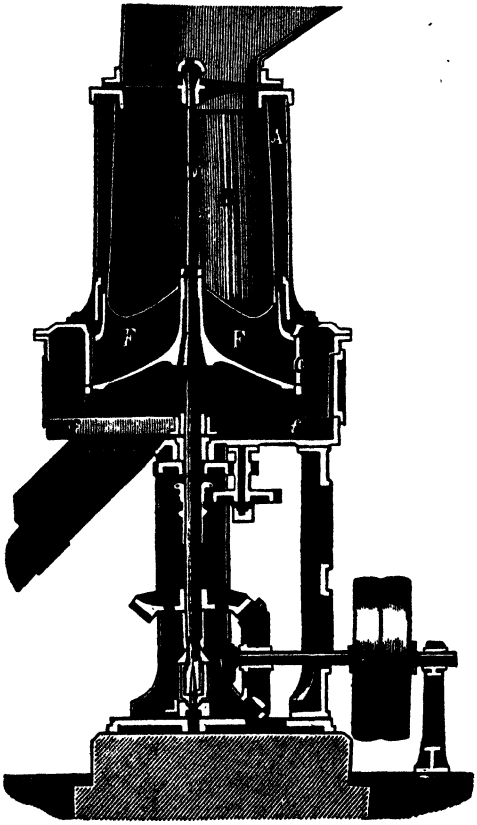

FIG. 133.—RASSMUS'S BEET SLICER.

juice from a previous operation, and then exhausted with cold water. The diluted juice is first heated to between 75° and 90° C. (167° to 194° F.), so that the mixture with the beet assumes a mean temperature of 50° C. (122° F.), which is considered essential to the success of the process. Displace-

ment of the juice is performed by a flow of cold water throughout the whole battery (of 5 to 8 vessels).

The arrangement of these vessels will be readily understood from Figs. 135 and 136. The cylinders are furnished at the upper part with man-holes *e* for the introduction of the slices. Near the bottom, a door *f* hinged at its upper edge permits the exhausted slices to fall upon an endless web, which conveys them away. In the interior of the cylinder is a case *c* pierced with holes, which prevents the pipes being obstructed by solid particles. The pipes *a v* put the vessels in communication with the re-heating boilers, while the conduits *h h' w z* maintain the circulation in the various cylinders of the battery. The steam-pipe *o* furnished with a tap *p* serves

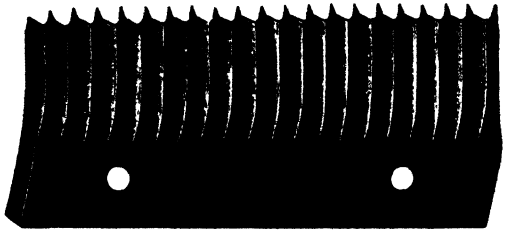

FIG. 134.—TILE FORM OF KNIFE.

for the introduction of the steam to the several vessels. Finally, the pipes *y* bring the water necessary to the operation, while the rich liquor passes away by *x* to the defecating boilers.

Each vessel receives 2½ tons of slices, occupying a space of over 12 square feet. The vessels are not filled until the juice or the diffusion water, as the case may be, has a temperature of 87° to 97° C. (189° to 207° F.). The vessel is ⅓ filled with this hot liquid, and then the slices are fed in through *e* from trucks holding about ½ ton. On emptying the fourth truck, the reheated juice is allowed to run in at top, so that when the charging of the slices is completed, the vessel is full of juice. The proportions of juice and pulp entering the vessel should be carefully adjusted. Whilst charging, it is well to

mix up the juice and pulp, so that no part shall be left imperfectly exhausted, and the liquids shall have uniform circulation. As the contents of 6 or 7 trucks are needed to fill the vessel, and as the discharging of each occupies about 4 minutes, the whole charging requires nearly half an hour.

The vessel once full, the cover *e* is closed, and the matters are left for about 20 minutes. At this moment, the pressure

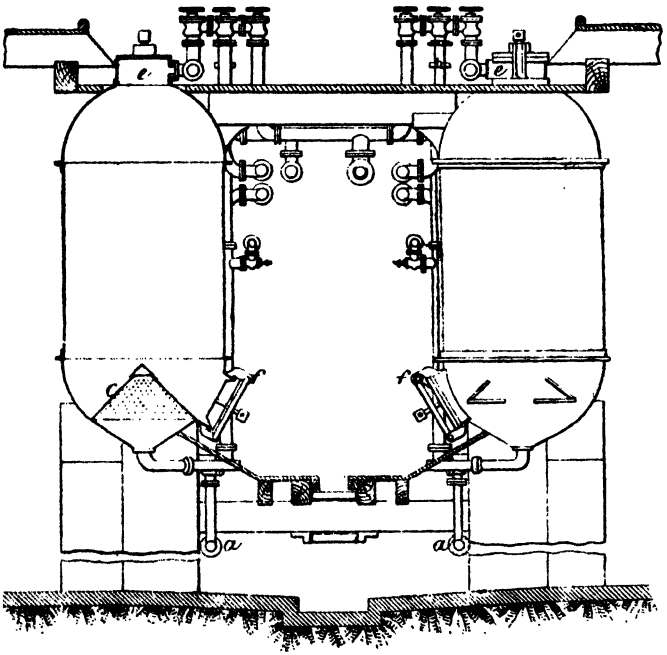

FIG. 135.—ROBERT'S BEET DIFFUSER.

of a column of water from the tanks above the factory is brought to bear upon the nearly exhausted pulp in the last vessel. As this vessel communicates with the 7 others forming the battery, the pressure can be conveyed to them all; the juice is thus displaced from the cylinder filled with fresh pulp, and proceeds while still hot to the defecating boilers. In practice, each vessel furnishes two full boilers of juice, varying

in density according to the duration and the number of vessels (5, 7, and even 10). Generally, the density fluctuates between 4° and 7° B., so that the juice is mixed with about 40 per cent. of water on the weight of beet.

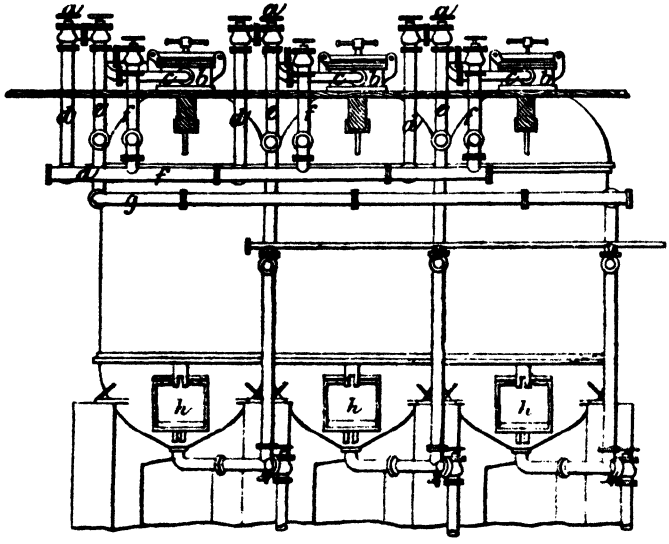

FIG. 136.—ROBERT'S BEET DIFFUSER.

The estimated cost of establishing a factory on the diffusion system to work 50 tons a day, according to Walkhoff, is as follows :—

	£
1 slicing-machine	144
10 cast-iron diffusers, weighing 1 ton each ..	288
50 cast-iron valves	180
20 taps	52
30 elbow pipes	13
15 straight pipes	22
600 screws, etc.	14
3 trucks, weighing 6 cwt.	50
Total	£763

Then the cost of extracting 100 parts of juice may be calculated thus :—

	£
6000 tons of beetroot	5760
Transport and cleaning	161
Interest and insurance at 10 per cent.	76
15 workmen per shift, or 30 per diem.	173
Removal of the residues (60 to 70 per cent. of the weight of beet), 4 workmen	46
Repairs, sharpening knives, etc.	58
Residue-press, interest, repairs, etc...	50
Fuel for 8 H.P. steam-engine, 88 tons of coal ..	127
Evaporation of 40 per cent. of water, requiring 480 tons of coal	691
Total	£7142

The product is 90 per cent. of juice at the initial density, or, on 6000 tons of root, 5400 tons of juice. The juice, therefore, cost about 26*s.* 5½*d.* a ton; thus diffusion presents no advantage in this respect over the best systems of maceration.

A novel arrangement of diffusion apparatus, constructed by the Prager Maschinenbau Co., is shown in Fig. 137. It is designed to take a maximum of 250 tons of beet per diem of 24 hours. This quantity is worked in Bohemia, where the juices are very dilute; if, instead of having juice at 3° B., it is desired to have it at 4° B., not more than 100 tons would be treated, at a sugar loss of 0·2 per cent. on the pulp. Four workmen suffice for the daily labour. In effect, the apparatus is rotary. The 9 diffusers *a* of which it is composed, having the form of inverted truncated cones, are borne in a circle on a wheeled table *b*. The motive power giving the rotation is ingeniously applied, and does not need to exceed 1 H.P. A complete turn is made in ¾ hour. The slicing machine (*coupe-racines*) *e* is placed above on a special stage, and supplies the slices to each diffuser by means of an articulated funnel, formed of movable segments, so that its mouth can follow the slow rotary movements of the diffuser which it is filling, until the quantity suffices. The axis of rotation of the apparatus is composed of two concentric cast-iron conduits, one conveying the water, the other the steam.

Between each two diffusers, is a vertical cast-iron cylinder which is the juice-reheater. This is tubular; each diffuser being furnished with a reheater, the temperature can be regulated at convenience, three taps sufficing for each apparatus. All these taps are placed at the centre of the system, at the height of the upper mouth of the diffuser. A stage is

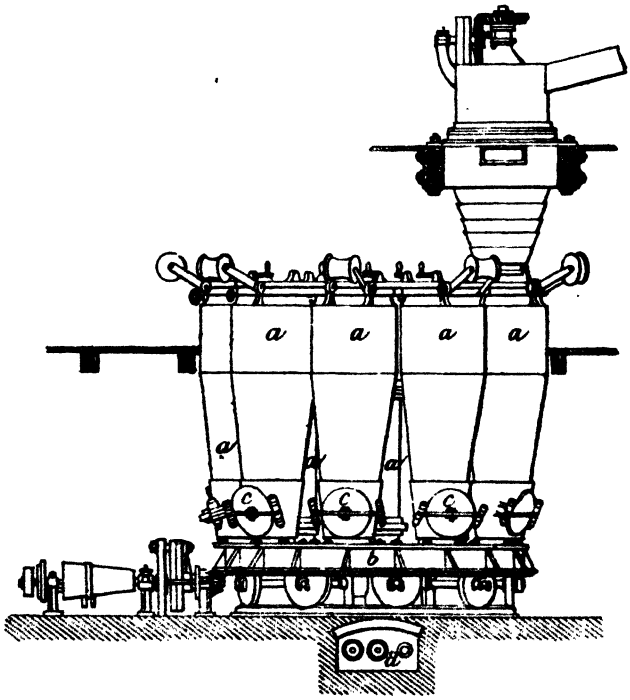

FIG. 137.—CIRCULAR DIFFUSION BATTERY.

here fixed so as to allow a man to stand in the midst. Another stage is placed circularly at the same height for the workman who opens and shuts the diffusers, and for the one who directs the funnel. The diffusers are closed at top by a heavy cover, of the same diameter as the diffuser itself, and which rests upon a circular indiarubber tube, forming a hermetic

joint, steam being admitted into the tube, so that it never flattens.

The outlet of the diffusers consists of a lateral door *c* opening from above; a trough is provided for the reception of the exhausted slices. The juice is let out by taps *d* below the ground. A perforated sheet-iron plate forming a false bottom prevents the slices from mingling with the juice, when the outlet tap is opened and the vessel is completely emptied of slices. A workman opens the lower doors each time a diffuser passes before the trough for the slices. A fourth workman is occupied at the slicing machines.

The advantages claimed for this system is as follows: Easy charging of the diffusers, the slices passing direct from the slicing machines, whence arises great economy of labour. The discharge of the exhausted slices takes place always at the same point. The duration of the diffusion, being regulated by the speed given to the apparatus, is always the same, and not at the discretion of the workman. There is great saving in the construction, the pipe system being central and necessarily short.

The circular arrangement of a diffusion battery as worked by the Fives-Lille Company is shown in Fig. 138. The beets, as brought in, pass through a first washer, which removes most of the attached soil. Thence they go into a second washer, which terminates in a stone-screener, destined to catch the small stones which remained after the first washing, and which would interfere with the slicers. The arms of the stone-catcher throw the beets on to an inclined plane formed of bars where they drip, and whence they are carried automatically to a vertical bucket elevator, which deposits them in a slicer. The slices are distributed through a series of intercommunicating diffusers, and are there exhausted of their sugar contents by a flow of water which passes through each diffuser in turn. The temperature of the water is raised to the desired point by circulation in steam coil vessels called calo-

risers. The slicer, placed in the middle of the battery, distributes the slices by means of a revolving hopper, thus saving much labour. The diffusers are provided with valve-

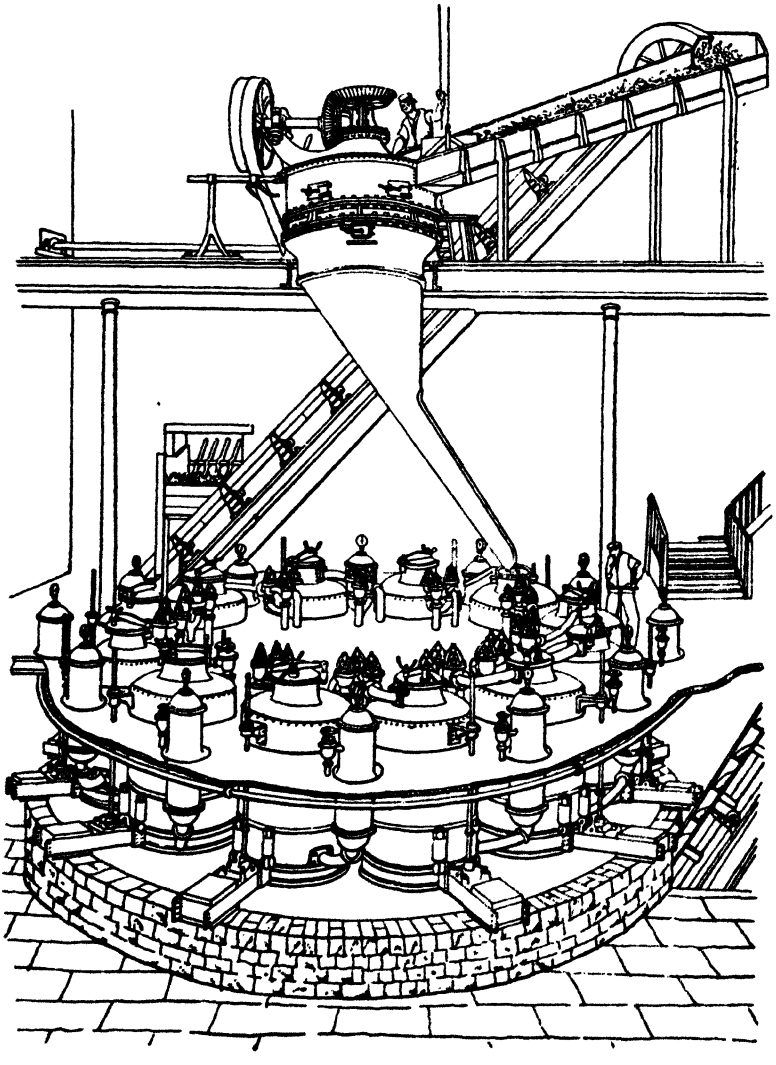

FIG. 138.—CIRCULAR DIFFUSION BATTERY.

boxes, and are erected over a well with a centrally inclined floor, into which the exhausted pulp is discharged.

Numerous other modifications are from time to time introduced. For instance compressed air is employed instead of water pressure for effecting the final exit of the juice, so that the first diffuser, at the moment of emptying, contains only fairly dry slices.

The general arrangement of a battery of diffusers at the present time is in two rows. The battery usually consists of 12 to 14 vessels, two of which are out of action, one being filled and one emptied. The contents of a diffuser varies from 20 to 80 hectolitres (440 to 1760 gallons). The height is 1¼ to 1½ times the diameter and should be regulated by the thickness of the slices to be worked, thicker slices requiring a deeper vessel. If too deep, however, the pressure of the slices on the sieve causes an obstruction, and impedes the circulation. Szyfer found that the best results were obtained with large diffusers, a slow flow of juice in the diffuser and a long battery. The water pressure on the last diffuser should not exceed a head of 32 feet above the receiver or measuring tank otherwise the compression retards the flow of juice. As all the diffusers except the first are fed with juice from above downwards, air-cocks are placed at the top of each, lest ascending air or gases should cause a resistance. This is particularly necessary when from scarcity of water, compressed air is used to drive off the juice from the last diffuser, or where, from fermentations or the action of acid juice on the metal of the vessels a development of gas takes place. In the first or freshly filled diffuser the juice is passed from below upwards to drive out the air entangled in the chips.

The juice on passing from one diffuser to the next is heated either by passing through a *caloriser*, a vessel provided with heating tubes or a coil of piping conveying low pressure steam, or by the direct injection of a little high pressure steam. The minimum temperature in the diffusers is 50° C., and the maxi-

mum 80° C. A higher temperature renders the chips soft, pulpy and less pervious. A proper regulation of the temperature in the battery is important. Battut drew samples at the same instant from each of the diffusers and found by analysis the quantity of sugar which had diffused in passing from one diffuser to the next. The curve obtained by plotting the results showed irregularities which were removed by properly adjusting the temperature.

The following appeared to him to be the normal temperatures for the battery :—

No. of diffuser.. ..	1	2	3	4	5	6	7	8	9	10
Temperature in °C.	35	58	65	65	65	66	66	73	75	18

The temperature of 65° C. appears to be that most favourable to diffusion, and that it should be pushed to 75° at the end to obtain the maximum of extraction. Any sudden fall in temperature in the middle of the battery seems to be prejudicial.

On starting the diffusers at the beginning of the season, the fresh slices are mixed with hot water, so that the mixture is at a temperature sufficient to kill the cells (75° C.). The juice thus obtained is forced by water pressure into the next diffuser filled, the juice being heated afresh in its passage through the caloriser. This is repeated, until the juice from the third diffuser is drawn off as raw juice. The next portion is passed over fresh slices and so on until the whole battery is in operation, when the last diffuser being completely desugarised is emptied.

The water used per 100 kilos of slices amounts to 120 to 140 litres, although the juice drawn off does not usually amount to so much (usually 105 to 110 litres) since more water passes into the cells than juice diffuses out. The amount of juice drawn off depends largely on the method of working and the condition of beetroots worked up. The duration of the diffusion process varies in the different methods

of working from an hour to an hour and a half. From the frequency with which the vessels require to be emptied and closed, it will be obvious that great importance must be attached to the arrangements for emptying and filling them. The covers at both the top and bottom must be as wide as possible and readily handled. They must fit closely to prevent loss by leakage and frequently have a hydraulic joint consisting of an indiarubber hose filled with water under pressure. Whether emptied at the bottom or sideways, the form must be such that the exhausted chips drop out completely and require no assistance by hand. They are then carried by a band or in water conduits to be pressed and dessicated.

Residues.—The exhausted slices derived from the diffusers form a valuable cattle-food. But as generally discharged they are too wet for immediate use, and require to be passed through a press for the removal of the excess moisture. This is commonly performed in the Kluzemann press, shown in Fig. 139. It is composed of a screw working in a conical space, which squeezes the pulp till it contains no more than the desired quantity of water. The objection to this press is that it breaks up the slices.

Skoda, of Pilsen, Bohemia, makes a continuous press, which avoids this disintegration of the exhausted slices submitted to it. It consists of two eccentric cylinders placed one within the other, of very different diameters, moving in the same direction and at the same peripheric speed. A screw causes the wet slices to fall into the interior of the larger cylinder, and they are carried by the general movement into the limited space between the outer surface of the small cylinder and the inner surface of the large one, and which is regulated by a double iron ring fixed to the inside of the large cylinder. This machine presses in the 24 hours the exhausted slices from 150 to 175 tons of beet, reduced to 40 or 45 per cent. of the original weight. The motive power

required is about 1½ to 2 H.P. The price of the machine is about 280*l.*

The Selwig and Lange (Brunswick) press, Figs. 140 and 141, is specially designed for expressing the water contained in pulp that has been exhausted. The pulp which is supplied continuously by a chain and buckets or an endless screw,

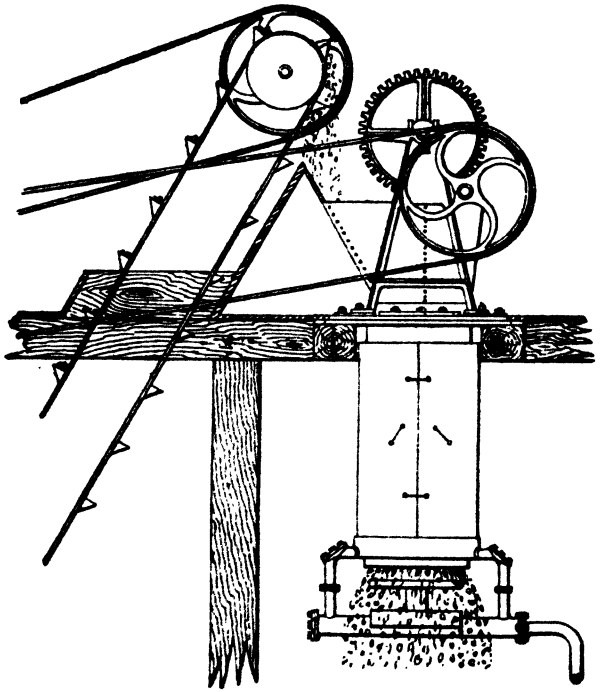

FIG. 139.—KLUZEMANN PRESS.

enters the hopper *e*, and falls at *a* between two openwork disks, whose sides are inclined and covered with perforated iron-plate. These disks are surrounded by the cheeks of the frame *b*, and the latter is securely bolted to wooden blocks fixed to the flooring. The disks revolve very slowly, and at an equal rate of speed, around stationary drums *c*, that are connected by tie

rods *d*, and they form with each other an obtuse angle such as to make them farther apart at their upper part. The pulp thus fills a chamber whose sides taper downward in the form of a wedge, and moves constantly over inclined axes. Owing

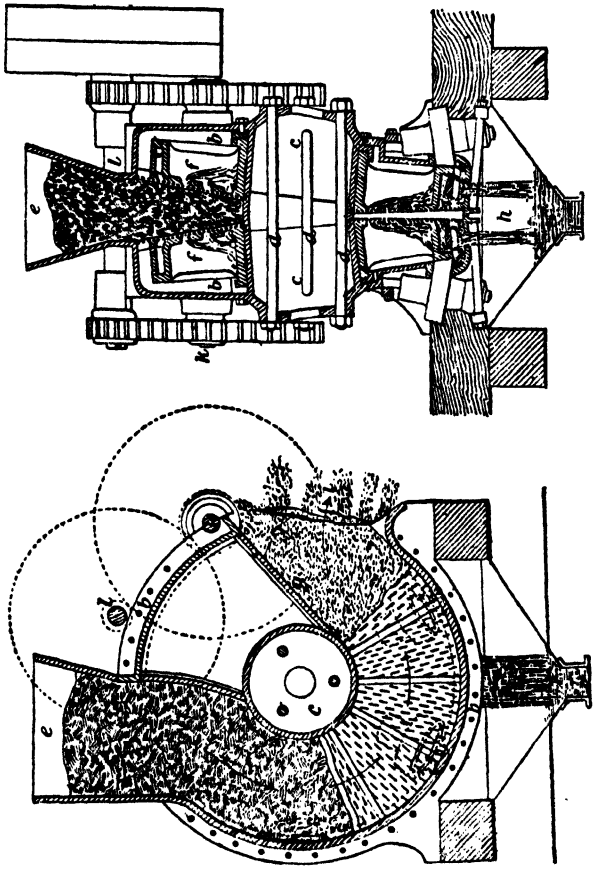

FIG. 10, 14 AND NGE PRESS.

to this arrangement it is carried along by the friction of the revolving disks, and is brought progressively into the narrowest interval of the pressure chamber. During this motion it undergoes a strong pressure, which reaches its maximum at *a*,

and the expressed water traverses the strainer and the disks *f*. The liquid afterwards escapes through wide orifices in the lower part of the frame, and falls into a funnel *h*, which connects with a drain.

As the rotary motion is continuous, the expressed pulp, on making its exit from the space *a*, passes into a wider cavity, and afterwards meets with a partition *g*, which forces it to make its exit from the apparatus in a state of considerable cohesion at *i*.

In order to permit of regulating the pressure, which depends upon the distance apart of the disks, the makers have arranged externally to each of these parts, a sleeve, whose position is determined by screws connected with the frame. Each sleeve is capable of moving upon its axis in such a way as to increase or diminish the interval that exists between the strainers.

As shown in the figures, rotary motion is transmitted to the apparatus by a belt that passes over a pulley keyed to the shaft *l*. Two gearings then drive the shaft *k*, and this sets in rotation two pinions that gear with a system of toothing upon the circumference of the pressure disks.

In order that the motion of these latter may be properly guided, each of them is put in contact with three conical rollers that pivot on the frame and run in bearings that permit of the position of their axes being regulated. All the running parts have to be carefully looked after and kept lubricated with tallow and black-lead.

The use of this press in sugar works has demonstrated the fact that it is unnecessary to take out the strainers in order to clean them during one season's running.

This operation, although very easy, may be avoided by forcing in, from time to time, a powerful stream of water against the external surfaces of the disks, which will then preserve all their efficiency.

A sample of pulp, dried by the Büttner Meyer drier, Fig.

142, at the Embresin factory, was examined after a month's ensilage, and was found to be as dry as a good forage, and

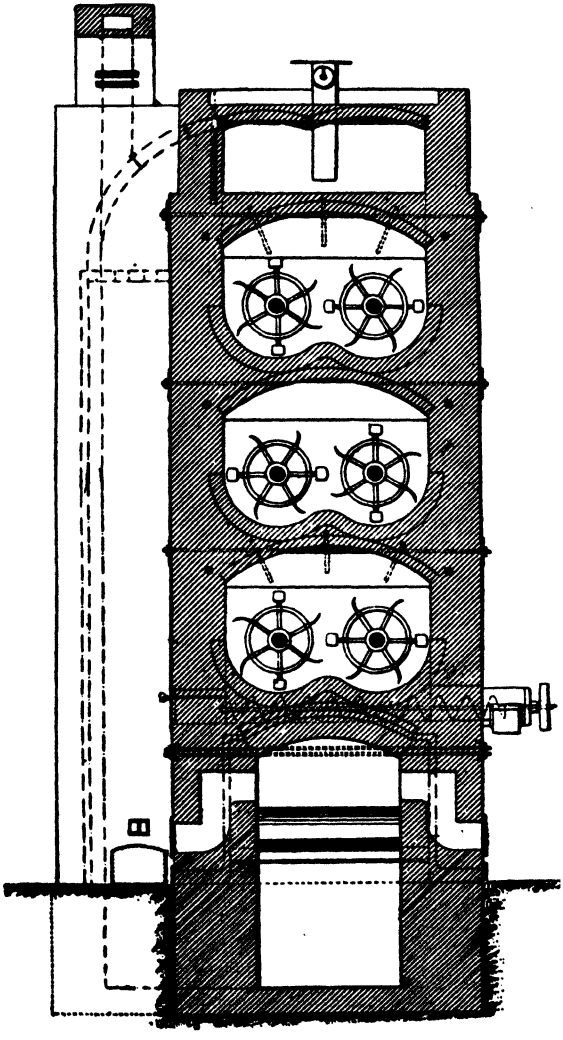

FIG. 142.—BÜTTNER MEYER DRIER.

showed no signs of decomposition in the laboratory even after some months. There was a complete absence of fungoid

growth. Analyses of fresh diffusion pulp made by Petermann at the agricultural station at Gembloux are added by way of comparison.

	Diffusion Pulp		
	Dried	Fresh	Fresh
Water	12·85	90·02	89·65
Fatty matters	0·64	0·07	0·09
Crude albuminous matters	*7·34	0·93	0·89
Non-nitrogenous extract	56·61	6·27	6·78
Cellulose	16·73	1·96	1·94
Mineral matter	5·83	0·75	0·65
	100·00	100·00	100·00

* Containing 93·4 per cent. of albuminoid nitrogen.

When the exhausted slices are to be used direct as fodder or put in silos they should not be subjected to too strong a pressure, 10 per cent. of dry solids is about the proper condition. In silos the moist chips undergo a slow fermentation or souring and become dried, after which they are readily eaten by cattle. Both by pressing and during souring there is a very considerable loss of nutrient matter, often reaching 30 per cent. If the moisture is reduced by drying to 10 per cent. the slices keep well. This drying is effected in stoves where the material is placed on stages or in revolving drums by direct contact with heated gases, the extra nutritive value compensating for the cost of fuel.

In some cases molasses are added to the pulp before drying, the proportion being 4 to 5 parts of molasses to 100 of the pressed chips or pulp; the mixture is then stored.

CHAPTER XIV.

DEFECATION OF THE JUICE.

Composition of the Juice.—The juice of the beet rapidly undergoes a change which confers a dark-brown colour. The composition of this dirty-looking liquid is approximately as given in the first column below deduced from figures given by Vrancken :—

In 100 parts of juice :—

—	Normal Juice	Diffusion Juice	Carbonated Juice
Sucrose	15·00	14·60	14·50
Invert sugar	0·15	0·15	..
Raffinose	0·02	0·02	0·02
Albuminoids	0·60	0·20	0·03
Other nitrogenous matters	0·65	0·62	0·59
Non-nitrogenous organic matters ..	0·30	0·38	0·21
Potash	0·25	0·21	0·21
Soda	0·05	0·04	0·04
Lime, magnesia, alumina and oxide of iron	0·16	0·06	0·01
Phosphoric, sulphuric and nitric acids, chlorine and silica	0·24	0·18	0·05
Water	82·58	83·54	84·34

In 100 parts of dry substance :—

	Normal Juice	Diffusion Juice	Carbonated Juice
Sucrose	86·11	88·70	92·59
Invert sugar	0·86	0·91	..
Raffinose	0·11	0·12	0·12
Organic matters	8·90	7·29	5·30
Saline matters	4·02	2·98	1·99

The raw juice usually indicates 12° to 15° Brix with 10 to 13 per cent. of sugar. Of the organic non-sugar, the character of which is mostly undetermined, it is merely known that with 100 parts of sugar there are 2 to 2·5 of albuminoids, 2·5 to 3 of other nitrogenous matters, 0·5 to 1 of reducing bodies, 1 of pentosans, and 0·4 to 0·8 of oxalic acid. The inorganic constituents are chiefly potash, soda, lime, magnesia, phosphoric and sulphuric acids, chlorine and very small quantities of other acids and bases. The raw juice has always an acid reaction, corresponding to about 2 c.c. of normal acid to 100 c.c. of juice.

The diffusion juice undergoes a preliminary purification by passing through the depulper to filter off fragments of pulp and fibre which have passed through the sieves of the diffusers. The application of heat to coagulate albumen, and of various chemicals or electrolysis to effect purification or decolorisation has been abandoned in favour of lime. Before the addition of lime the diffusion juice, usually at about 30° C. is passed through a heater to raise its temperature to 80° C. The most suitable form of heater is a closed vessel with several sets of heating tubes of small bore; the juice passing at a great speed has less tendency to form deposits on the heating surface. But every heater is provided with valves that it may be put out of work for the removal of any deposits whenever necessary. The addition of about 0·2 per cent. of lime, in the form of milk of lime, at this stage to prevent inversion is attended with the drawback of causing the scum presses to work badly, and, being mostly superfluous, is seldom done. The use of dry lime for defecation effects a saving in giving less dilute juice and the heat evolved during slaking warms the juice, and the lime in this state acts more energetically, but great losses of sugar have been observed and lower purity than with wet defecation, and it is also said to give grey sugars. The loss is doubtless due to insoluble sucrate of lime which has escaped decomposition in the subsequent

saturation; the grey colour is due to quite other causes. Even when milk of lime is used there may be production of insoluble sucrate of lime, if the juice is heated after defecation; the raw juice must therefore always be raised to a temperature so high before lime is added that a subsequent heating is unnecessary. The lime acts both mechanically in precipitating suspended impurities, and chemically in throwing down non-sugars, forming insoluble compounds with oxalic and phosphoric acids and decomposing invert sugar and albumen. Many bodies which are not precipitated are altered in character whereby crystallisation is facilitated.

The most convenient density of the milk of lime is 20° Beaumé; the quantity to be added being drawn off in measuring tanks.

Although the addition of large quantities of lime undoubtedly gives lighter coloured juice there is no increase in purity in the saturated juice, and the extra expense involved is only justifiable when specially fine sugars are to be made.

1½ to 2 per cent. of lime, calculated on the juice is added and saturation at once commenced. This is continued until the alkalinity to phenolphthalein falls to 0·7–1·0 per cent. of lime.

Defecation by Lime and Carbonic Acid.—The impure juice can be clarified to a certain extent by simple boiling, as the albuminous (nitrogenous) constituents coagulate in the same way as those of cane-juice, and form a supernatant scum. But the coagulation is very imperfect. The addition of slaked lime greatly facilitates the aggregation of impurities, owing to the formation of insoluble lime compounds; but a coincident effect of the lime is the prevention of the coagulation of the albuminous matters, which remain in solution till partially destroyed by boiling in the presence of the alkali. The part played by the lime is very complex, and not clearly made out, but it seems to displace many of the bases in combination with sulphuric, oxalic, and other acids, forming insoluble compounds

with those acids, and further destroys some of the albuminous matters, as evidenced by the disengagement of ammonia when the temperature is raised.

The convenience and cheapness of lime as a defecator are obvious. Its use in the beet industry was copied from the cane-sugar makers, and at first it was often employed in excess, to the great detriment of the process. Thus it was that in 1792 a proposition was made to replace it by sulphuric acid, a still more dangerous agent, the excess of acid being neutralised by the addition of chalk. This process gained little favour, and the simple lime defecation continued in general practice till eminent chemists proposed to saturate the excess of lime by adding sulphuric acid. This last plan was succeeded by clarification with the aid of animal black and blood, decanting, and filtration through animal black. This system endured till 1849, when carbonic acid was proposed as a substitute for sulphuric acid in neutralising the excess of lime. This was unsuccessful at first, but Rousseau's plan, which overcame all practical difficulties, was as follows :—

The juice is raised to a temperature of 50° to 75° C. (122° to 167° F.), according to the time, and an addition of 1½ to 5 gallons of milk of lime at 22° Beaumé per 100 gallons of juice is made, the heat being thereupon increased to 85° or 90° C. (185° to 194° F.), or well below the boiling-point. The juice is drawn off clear, the scums are pressed, and the juice is collected in a boiler and treated with carbonic acid till the remaining lime is saturated; the excess of carbonic acid is finally driven off by a short boiling. The carbonic acid gas was produced by burning charcoal in a small furnace, and was injected into the mass by a pump. This process rapidly extended, as it economised 3 per cent. of the black formerly used.

Ten years later, Périer and Possoz, in combination with the house of Cail, introduced a novel system of applying this

process. It had long been known that lime had the property of preserving the juice from fermentation, and that a limed juice would keep unaltered for a long time. Dombasle recommended the application of a little lime to the juice before defecation, to avoid the fermentation which may be developed during the few hours the juice may have to wait in working; and Dubrunfaut insisted upon the necessity of adding a little lime to the cold juice immediately on its extraction, especially when dealing with large quantities. Out of these considerations, arose a patent process by Maumené, which was collateral with the plan of Périer, Possoz and Cail. Henceforward the process, termed "double carbonation" (*double carbonatation*), came into almost universal use; in Germany and Russia, it was connected with the names of Frey and Jelinek, who introduced it there with some trifling modifications.

The method of carrying out the double carbonation process is as follows:—

(1) Put lime into the juice as soon as possible, even into the mixture of juice and pulp, by introducing milk of lime into the rasper, or a weak solution of sucrate of lime, which, under proper conditions, does not appreciably alter the value of the pulp as a cattle-food.

(2) Let the contact of lime and juice be sufficiently long, such as when preserving juice in cisterns, in the store-tanks at the exit from the rasping, or when transmitting it through the Linard pipe system (p. 428). Thus the free acids which would alter the sugar are saturated, and a very satisfactory cold defecation is obtained.

(3) Introduce the turbid juices into the first-carbonation vessels described further on, there adding 15 to 30 thousandths of lime in the state of milk of lime.

(4) Pass carbonic acid gas in the cold up to about the middle of the carbonation; then gently admit steam to warm the juice; the supply of carbonic acid is stopped, when the juice does not contain more than 2 thousandths of lime.

(5) Turn the steam on full till the temperature reaches 90° C. (194° F.), to throw up the scum. Allow to rest, and decant.

(6) Transfer the clear juice to the second-carbonation boilers, add 2 to 10 thousandths of lime, and heat to boiling in order to destroy the nitrogenous matters not eliminated by the first carbonation.

(7) Pass carbonic acid till the lime is completely saturated.

(8) Give a rapid boiling, allow to settle, and decant.

The double carbonation process, simple in practice, and easily applied in all cases, became everywhere general in the beet-sugar industry, though a few have adhered to Rousseau's plan. The purification was effected in two ways. The carbonic acid in uniting with the lime in the midst of the juice, formed carbonate of lime, which on precipitating carried with it a large quantity of organic matters. In fact, the scums of the first carbonation were very dark; the supply of carbonic acid was stopped, when its further action would redissolve the colouring matters. In the second carbonation, the lime boiling destroyed the matters which resisted the first carbonation. The excess of lime was finally removed by carbonic acid.

The process of extracting the juice by rasping and pressing and by maceration having been universally displaced by the diffusion process, certain modifications in the carbonation were rendered necessary by the different character of the juice thus obtained. The cossettes being clean cut, yield far less fine pulp in the juice which, moreover, undergoes a filtration and preliminary defecation by heat in passing through the diffusion battery. Lime may therefore be safely added to the hot juice without any danger of forming gummy matters, and carbonation is thereby considerably accelerated.

Diffusion juice contains, besides its 10 to 14 per cent. of sugar, a quantity of inorganic and organic non-sugar constituents, which give the sugar made from it an ugly appear-

ance, hinder crystallisation, and therefore diminish the yield. These are in part removed by defecation chemically, by being rendered insoluble or volatile, and physically, by the non-precipitable matters being so modified as to be retained by the surface of the char.

The most varied substances have been proposed for the defecation of the juice, but lime has proved to be not only the cheapest but the best purifier. Lime is variously applied. In general it is mostly added to the hot raw juice and the excess in great part removed by precipitation with carbonic acid gas, but not completely. Before treatment with lime the juice is usually passed through a sieve, termed a depulper, to remove the greater part of the suspended loose pulp or coagulated albumen. Albumen begins to coagulate at 65° C., and the amount left in the juice naturally varies with the manner of working, the temperature now being about 80° C. in hot working. Any albumen which has not been coagulated by heat, or precipitated by lime, is altered by lime with evolution of ammonia. Asparagine and glutamine likewise give off ammonia during the treatment with lime, and are converted into alkali salts of aspartic and glutamic acids. The lime added to the warm juice, in so far as it is dissolved and not merely suspended in the juice, forms soluble mono-calcium sucrate. Even tri-calcium sucrate is immediately converted into this compound in the hot juice. The tri-calcium sucrate is mostly obtained from the desaccharification of molasses by lime, a process which would otherwise not pay, were not the sucrate produced utilised in the defecation of raw juice. This sucrate, although impure, is however purer than the juice to which it is added. The acids and acid-salts present in the juice, forming insoluble lime salts, and colouring matter are precipitated, so that the defecated juice is a transparent liquid of a pale yellow colour, and has lost a great part of its viscous or slimy character. Of the fragments of cells and the fibre present in the raw juice the cellulose is insoluble in alkaline liquids but the intercellular

substance is changed, by long boiling in one, into a modification of arabic acid, and gives to the juice a slimy character. The object of the pulp catcher is to remove these fragments and avoid this change.

The carbonated juice is left alkaline. The juice is thereby protected against the action of ferments, invert sugar is de-

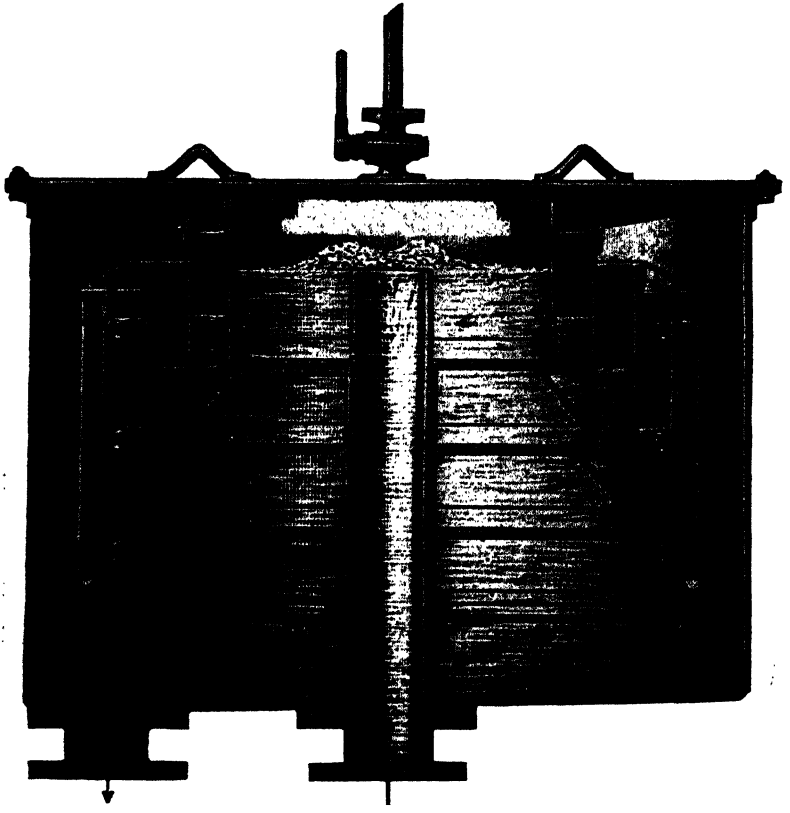

FIG. 143.—WAGNER'S DEPULPER.

stroyed and its deleterious influence avoided. Part of the non-sugar, which is soluble in strongly alkaline solutions and therefore separated during defecation, would redissolve in excess of

carbonic acid. The saturation is stopped when 0·05 to 0·02 per cent. of free lime or other equivalent alkalinity is still present in the juice.

Albumen and Pulp Sieves.—The filtration of diffusion juice is not yet sufficiently carried out, although the process is simple and destined to considerably facilitate the subsequent work by acting as a mechanical aid to defecation. The loose pulp and fibre not only act unfavourably during the carbonating and further on, during crystallisation, but the impurities are deposited on the tubes of the heating coils, and necessitate frequent cleaning to maintain the full capability of the apparatus to transmit heat. One form of depulper is that due to Wagner, Fig. 143, which consists of three or four cylindrical, concentric sieves in a closed vessel, the perforations being arranged so that the juice passes through the coarsest ones first, the holes varying from 5 to 1 mm. in diameter from the innermost to the largest and outermost sieve. On unfastening the cover the sieves are easily removed for cleaning. In Braunbeck's albumen filter, the coagulated albumen is removed from the heated juice by passing under slight pressure through a series of filter bags arranged in a rectangular vessel. Strohmer and Stift have given the following results obtained with one of these filters :—

—	Raw Juice	Juice after Filtration
Sugar	10·55	10·60
Water	87·02	87·44
Ash	0·55	0·49
Organic matter	1·88	1·47
Real purity	81·52	84·35
Nitrogen as albumen	0·096	0·066
Amide and ammoniacal	0·076	0·044
Amino-acids	0·030	0·008
Total nitrogen	0·262	0·155

Herzfeld has pointed out that by boiling the juice only 10 per cent. of the albuminates were coagulated and that the pre-

cipitate was in a form not attacked by lime under factory conditions. Notwithstanding this observation, the filters have come largely into use in Austria and Germany.

The juice from the diffusion battery requires further heating for effective defecation, and as the incrustations on the coils in the defecation pan soon render them less effective, special heaters have been introduced similar to the calorisers of the battery, but of larger heating surface. They are also frequently made to serve the purpose of measuring tanks.

Juice-Heater.—The juice is passed through a number of tubes *e e*, Fig. 144, contained in a cylindrical casing B, into which steam is admitted, and surmounted by a pan A.

Defecation and Saturation Pans.—Formerly two pans were used, the defecation pan being jacketed for steam. When defecation is complete, and a skin has formed, the clear juice below is syphoned off into the second, or saturation pan. The separate defecation pan is now used only in small factories, defecation and saturation being completed in one and the same vessel, now called the saturation vessel. When the old pans are adapted to the slime saturation, they are made higher and covered, being provided with an escape pipe for excess of gas and air, and are fitted with a perforated pipe for the introduction of the carbonic acid. There is no syphon, the turbid carbonated juice being run off at the bottom. During the process of carbonating, a good deal of consistent froth is formed necessitating the use of froth beaters. One form is that of a circular coil of perforated pipe, whereby steam is blown in to destroy the froth. Another, termed the centrifugal froth damper, consists of revolving arms or wipers to effect the same purpose. An improved form of saturators is the boxed-in chest, heated with steam coils. These take up less room than the old pans, and waste less steam.

Figs. 145, 146, show a saturator in elevation and vertical section. It consists of a rectangular iron box or tank, the bottom of which is strongly inclined forwards to facilitate the

removal of the scum which collects, and contains a heating coil, trapped below. The perforations in the pipe by which

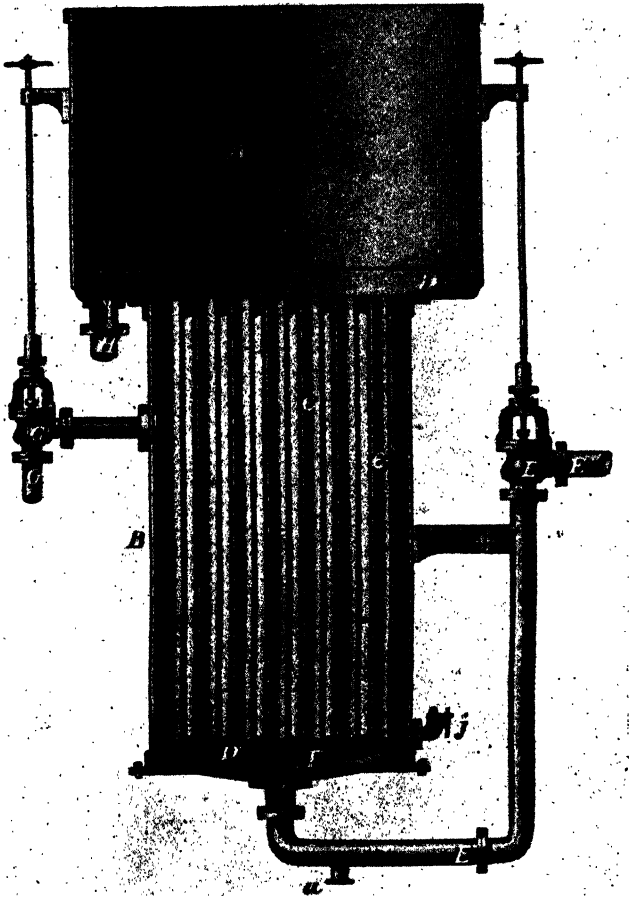

FIG. 144.—JUICE HEATER.

the carbonic acid gas enters being directed outwards to ensure thorough utilisation of the gas, and the perforations increasing in number towards the end of the pipe to secure uniformity.

of distribution as the pressure decreases. There is, nevertheless, a loss of carbonic acid from incomplete absorption, and in order to remedy this, saturators have been arranged in battery to utilise the gas escaping from one, by passing it into a second, and so on. There are also various forms of continuous

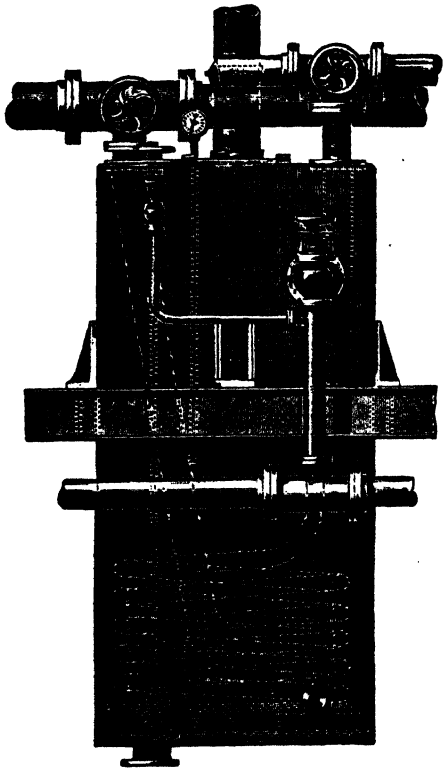

FIG. 145.—SATURATOR.

saturators. The Reboux system of continuous saturator (Fig. 147) is a zigzag of four pipes, the juice entering at the bottom. Inside the lowest pipe is a concentric perforated pipe to introduce carbonic acid. The precipitated carbonate is carried upwards with the juice. Valves regulate the supply

of gas and juice, so as to obtain the desired alkalinity at the exit. A wash down with water is sufficient to clean the apparatus, there being no crust or deposit formed. The space occupied is only about two thirds of the usual. It is somewhat doubtful, however, how far the saving is worth the extra

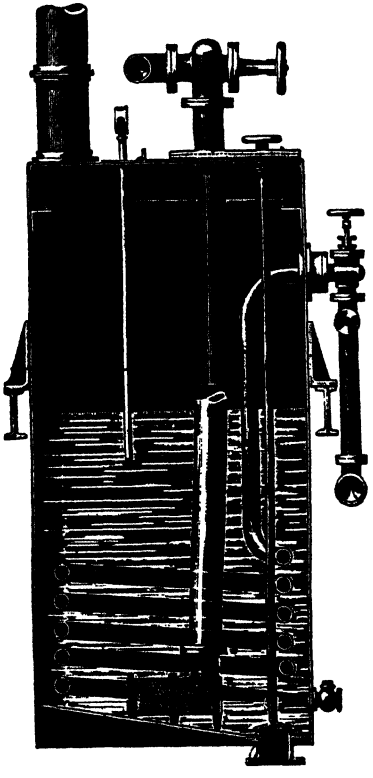

FIG. 146.—SATURATOR.

cost of the increased power necessary to force the gas against the extra column of liquid seeing that the kilns produce more gas than is sufficient to neutralise all the lime they produce. Körting's jet blower is another contrivance for effecting a more complete absorption of the gas. The inlet pipe for

carbonic acid ends in a number of mouthpieces on the principle of an ejector, each jet of gas drawing with it a thin stream of juice.

The saturating tanks are usually placed on a lower level than the battery. Where this is not convenient, the juice is

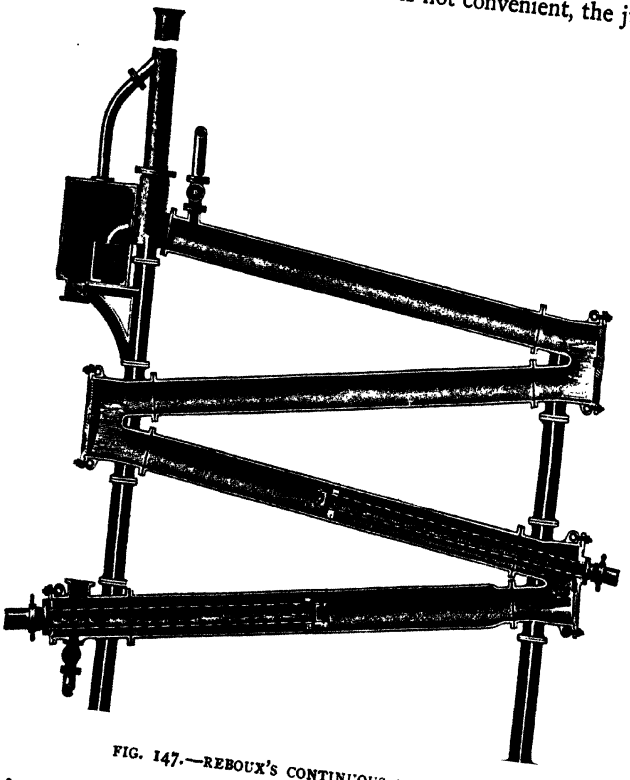

FIG. 147.—REBOUX'S CONTINUOUS SATURATOR.

raised by a *monte-jus*, Fig. 148, consisting of two cylindrical vessels worked alternately, in which the juice is driven out by steam pressure. They are constructed of strong boiler plate, and have a delivery-pipe reaching to a well at the bottom, with manometer and air-cock.

Quicklime.—For the preparation of lime for defecation

purposes only such limestones are fit as contain little matter insoluble in acid. They should be free from calcium sulphate and especially from magnesia, because it is not only inactive, but increases the amount of scum to be dealt with, and forms with silica incrustations in the evaporators. Dolomite or magnesian limestone must therefore be rejected. Lime should be white, and slake with water quickly and easily to a uniform paste. These qualities are affected by the physical

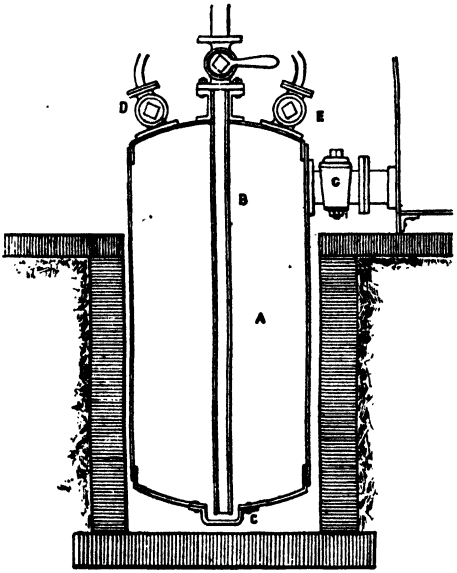

FIG. 148.—MONTE-JUS.

condition, apart from overburning, etc., as well as by chemical composition. Lime is usually employed as milk of lime, the density being about 20° Beaumé. The method of adding lime in small lumps, and allowing it to slake in the juice, to avoid unnecessary dilution, is attended with evils which have led to its abandonment in many cases, although some factories obtain excellent results in this way. The water used should be the purest procurable, but sweet washings may be utilised

to save evaporation. In a small way lime is slaked in pails into which the weighed quantity of lime is put. Any undissolved matter, flints, etc., are weighed, and the equivalent of fresh lime added to make up. Larger quantities are prepared in special tanks provided with stirrers, and measured quantities are strained off as required, the measure depending on the concentration as given by the density taken by a Beaumé hydrometer and reference to the table given below. 20 kilos of lime should make 100 litres of lime milk.

LIME IN MILK OF LIME AT 15° C. (Lunge and Blattner.)

°B.	Density	Grm. of Lime (CaO) per 100 c.c.	CaO per cent. by Weight
1	1·007	0·75	0·745
2	1·014	1·65	1·64
3	1·022	2·6	2·54
4	1·029	3·6	3·50
5	1·037	4·6	4·43
6	1·045	5·6	5·36
7	1·052	6·5	6·18
8	1·060	7·5	7·08
9	1·067	8·4	7·87
10	1·075	9·4	8·74
11	1·083	10·4	9·60
12	1·091	11·5	10·54
13	1·100	12·6	11·45
14	1·108	13·7	12·35
15	1·116	14·8	13·26
16	1·125	15·9	14·13
17	1·134	17·0	15·00
18	1·142	18·1	15·85
19	1·152	19·3	16·75
20	1·162	20·6	17·72
21	1·171	21·8	18·61
22	1·180	22·9	19·40
23	1·190	24·2	20·34
24	1·200	25·5	21·25
25	1·210	26·8	22·15
26	1·220	28·1	23·03
27	1·231	29·5	23·96
28	1·241	30·9	24·90
29	1·252	32·4	25·87
30	1·263	33·9	26·84

The quantity of lime required for defecation can only be determined approximately by outward indications. In general, it may be said that up to a certain point, an increased

quantity of lime gives increased purification; an excess, however, may be a hindrance to the separation of juice from the scum, and too little will leave the juice insufficiently decolorised and grey. The older processes used from ½ to 1¼ per cent., the newer, up to 4 per cent., and over. A small quantity does give purification, but the precipitate is gelatinous and slimy and difficult to filter.

In top defecation the juice is heated quickly to 80° C. ½ per cent. of lime added and the whole stirred. A sample is examined in a glass. If the scum separates leaving the juice yellow and clear, enough lime has been added; if not, 0·2 per cent. more is added, and so on until completely defecated. Then heat gradually until the suspended lime comes to the surface. As soon as the juice comes to the boil, stop the heat, allow to rest, and separate juice from scum. The clear juice is passed to the saturators. When larger quantities of lime are used and the juice brought to full boiling, the lime coagulum sinks, and there is what is termed bottom defecation. The great objection to these methods is that each different lot of beet-roots required the juice to be examined to find the treatment suitable, otherwise there were difficulties in clarifying. The more recent methods, rendered possible by the introduction of filter-presses suitable for dealing with large quantities of scums, use a larger quantity of lime and thereby ensure full purification, char is not necessary, or only partially so, and is replaced by one of the manifold forms of mechanical filtration. A further essential element is the use of lime kilns to produce the large quantities of carbonic acid required for saturation. Single saturation is carried out at 94° C., the 1½ per cent. of lime used, being added in two stages. Double saturation is carried out in varying detail in almost every factory, with the different average condition of the roots and their own way of working. The method of Périer and Possoz is chiefly valuable, because of the impetus it gave to further improvements.

In Jelinek's scum saturation, defecation and carbonating are combined in one operation at a lower temperature than was usual. From 2·5 to 3·5 per cent. of lime are added to the juice at 45° C., at the same time gas is passed in slowly at first, then more rapidly; finally the temperature is allowed to rise to 90° C., and the scum and juice passed to the filter-presses. Albumen is incompletely precipitated at the lower temperature used, but the advantages are that enough lime is used to obtain an easy separation of the grainy scum.

The following is a comparison of Jelinek's method with that of Périer and Possoz: The juice is heated to 50° C., and treated with 1½ per cent. of lime, calculated on the weight of the beetroots, its temperature is slowly raised to 60° C., and another 0·5 per cent. of lime added to it. The gas is passed in immediately after the first addition of lime and is continued until the scum separates in a sample. The juice is then heated to 88° C., allowed to settle for five minutes; the clear juice saturated again, allowed to settle, and heated to 78°, when it is filtered.

The Kuthe-Anders Process.—Diffusion proceeds at a temperature below 73° C., the juice is depulped and heated to 75° C. to coagulate albumen, 0·4 to 0·75 per cent. of lime is added, and the mixture stirred; then saturated to 0·18–0·24 per cent. of CaO, and filter-pressed. A further 0·8 per cent. of lime is added, the juice heated to 99° C., and carbonated until 0·3–0·2 of lime is left free, when it is heated to 100° C. The second saturation may be made with sulphurous acid and carbonic acid to reduce the alkalinity uniformly to 0·015 per cent. After mechanical filtration the purification is complete, and no char is needed. Strohmer and Stift speak favourably of the process.

Attempts have been made to utilise electricity in conjunction with the defecation and saturation process. Zinc electrodes were used. A current of 35 to 40 amperes, at 4–5 volts, were passed through the juice for about ten minutes. Albu-

men was coagulated, it is true, but a third of the precipitate formed was zinc oxide. 1 to 1½ per cent. of lime gave as good a purification as 3 per cent. of lime without electricity.

The boilers are the same for the first and second carbonation, except that the first produces a tenacious scum which must be beaten down. This is effected in two ways; either by furnishing the boilers with strong offsets, and a cover provided with a long chimney, when the scum stops at a small height in this pipe; or by placing at the top of the boiler, throughout its whole length, perpendicular to the side where the workman stands, and on each side, two pipes of small diameter pierced laterally with little holes, through which steam is passed at high pressure. The steam escaping at the holes forms a draught which blows the scum back into the boiler. This latter apparatus, termed "Evrard's skimmer," works well, but requires much steam.

Below each carbonating tank is placed a decantation vessel, generally of the same form and dimensions. Into these the liquid flows when let out of the carbonators by the plug. These decantation vessels, whose floor is also inclined and furnished with a plug, have in front a large external tap, connected inwardly with a flexible tube furnished with a float which maintains the mouth of the tube at the clear surface of the liquor. When the turbid carbonated juice has been run into these vessels, it is allowed to settle and clarify itself, and is then decanted. The clear juice is received in a conduit which conveys it to the second carbonation, or to the filtration. When the float reaches the deposit, the workman closes the tap, opens the plug, and lets out the semi-solid mass into a trough connected with the filter-presses, to be described presently. In most works, the decantation vessels are done away with, the operations being conducted in the carbonator.

Lime Kilns.—The lime and carbonic acid employed in the operations are usually made at the factory. With this object,

there is built near by a large continuous lime-kiln, as shown in Fig. 149. The gases escaping from the calcination of the limestone contain 25 to 30 per cent. of carbonic acid gas. The gases are drawn away from the exits of the kiln by the suction of a large pump, the speed given to the pump being regulated according to the state of the kiln. This pump forces the carbonic acid gas into the general pipe serving all the carbonators, which pipe is furnished with a safety-valve for

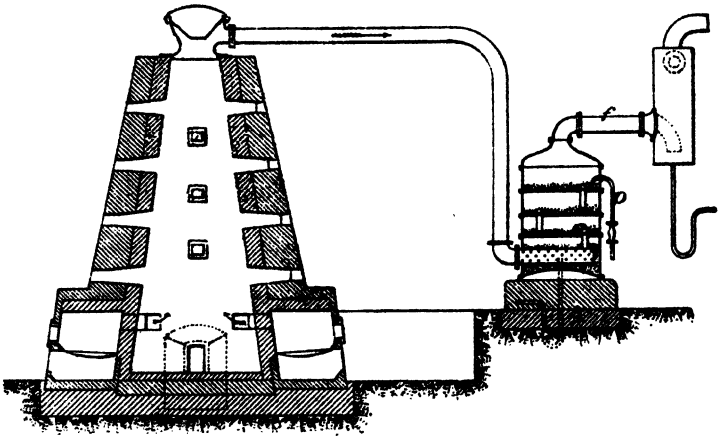

FIG. 149.—LIME-KILN FOR CARBONATING BEET JUICE.

letting out the excess of gas supplied by the pump. Between the kiln and the pump, the gas traverses a washer, a sort of vertical cylinder provided with perforated trays, entering at the bottom by a perforated pipe, and escaping at the top by the pipe *f*, while a stream of water, conveyed by the pipe *p*, falls in showers over the trays, and comes into contact with the ascending gas.

According to the richness of the gas, so the kiln is regulated. It thus becomes necessary to make frequent tests of the gas. A convenient instrument for this purpose is that of Possoz, shown in Fig. 150: *a* is a graduated glass tube; *h*, a

vessel filled with water; *b f*, indiarubber tubes closed by pinch-cocks, *e d*. The tube *a* is filled with the carbonic acid gas with the usual precautions, and a few c.c. of caustic potash are introduced at *b*, which is then closed; *a* is then taken in the hand and strongly agitated, that the potash may combine with the whole of the carbonic acid, and *d* is opened. The vessel *h* is next raised in the hand, till the level is the same in both the vessels, when the reading of the indicator in *a* gives the percentage richness of the gas.

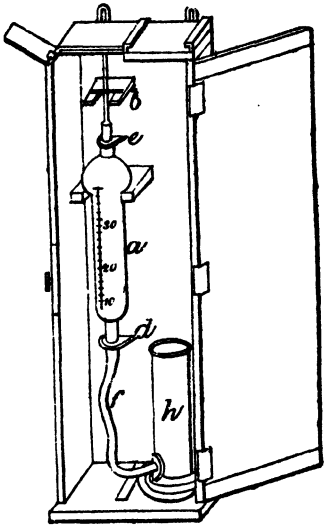

FIG. 150.—POSSOZ'S CARBONIC ACID GAS TESTER.

A still more convenient apparatus for the purpose, which is much used, not only in sugar works, but in other factories, is that of Wigner and Harland, Fig. 151. It consists of a glass tube about ¾ inch diameter, and 16 inches long. It is furnished at the top *a* with a tapering neck fitted with an indiarubber cock; at the bottom, it terminates in a narrow glass tube *b*, provided with a stopcock *c*. It is graduated into 100 divisions. The lowest division (0) being at about ¾ inch from the bottom, and the top division (100) at the base of the neck.

It is used as follows. The open end *d* of the narrow tube *b* is dipped into a saturated solution of caustic soda or potash, which is sucked up until the tube is filled to the 0 mark. The stopcock is then closed. The gas, when cool, is rapidly passed into the mouth of the tube for a few seconds by means of a leading tube, which passes well inside the apparatus. The contents are violently shaken for half a minute, and the

tube *d* is immersed below water, and the stopcock opened. As soon as the water has risen in the tube, the cock is closed, and the shaking is repeated. Water is then admitted again in the same way, care being taken to level the water inside and outside the tube before the cock is closed. The reading on the scale gives the percentage of carbonic acid. If a solution of pyrogallic acid is now introduced, the percentage of oxygen can be determined in the same way.

FIG. 151. WIGNER AND HARLAND'S CARBONIC ACID GAS TESTER.

The carbonic acid expelled from the limestone during calcination, increased by that contained in the gases produced by the combustion of the fuel, requiring to be utilised for saturation of the limed juice, the kilns in use in sugar factories are closed at the top, and the gases are drawn off by a pump. In some cases the mixture of coal or coke and limestone are added together in the kiln, so that the lime is largely contaminated with the ash of the fuel. The more usual plan is to have separate fires outside the kiln proper, and pass only the heated gases through the kiln. Besides avoiding the contamination of lime with the ash of the fuel, and the danger of fusion with it, the heat is more carefully regulated and the burning more regular. The limestone can also be used in large pieces, so that the labour of breaking it up is avoided; the larger pieces of lime thus obtained keep better in the air.

The following considerations indicate how the size of kiln necessary for a given work may be calculated: 2000 double centners of beetroots (200 tons), yielding 2000 hectolitres (44,000 gallons), on being treated with 3·5 per cent. of lime require 7000 kilos (7 tons) of lime, or 13,160 kilos (13·16 tons) of limestone. This will

have a volume of 12·53 cubic metres. 100 kilos of limestone require 6 kilos of coke for calcination. Now a hectolitre of limestone weighs 105 kilos, and the same volume of coke, 40 kilos; it follows that one volume of coke will calcine 6·35 volumes of limestone. The 200 tons of beetroots per day will, therefore, require a kiln of 47 cubic metres capacity, assuming that it takes three days for the production of well burnt lime.

Coke alone would only give on burning a gas containing a maximum of 21 per cent. of carbonic acid, and often 15 per cent. is very fair combustion. The gas obtained may contain from 25 to 30 per cent.

The temperature of the kiln was taken by Claassen and Herzfeld, with Prinsep's metal pyrometer consisting of thin strips of alloys of gold and platinum in varying proportions so as to melt at fixed temperatures. The strips were enclosed in holes in a fire-clay tile, and passed through the kiln. The temperatures thus found during normal work were from 1200° to 1250° C., the tile being usually 2 to 3 days in the kiln.

Some kilns are heated with producer gas from coke or anthracite. The Fichey and Heurtey kiln uses 7 to 9 per cent. of anthracite, and yields a gas containing 30 to 33 per cent. of carbonic acid. The body of the kiln is built very slightly tapering, being 2·90 metres in diameter at the height of the fire and 14–15 metres high, the gas being admitted at one-third of the height.

In kilns without external firing it is essential that the height of the hot fuel must be carefully regulated. If it is too great, there is danger of formation of carbon monoxide from the action of red hot coke on carbonic acid passing over or through it. Decluy distinguishes four zones in the kilns. The lowest in which the lime cools and the gases are heated; the second, in which dissociation takes place; the third in which the fuel and limestone are heated, and the uppermost or regulation zone. While the gas pump may be said to be dependent on the working of the kiln, it practically regulates the furnace.

If worked too strongly too much draught is caused and the kiln becomes too hot, if too slowly worked, the combustion is sluggish and the lime not well burnt.

The gases of the lime kilns show carbonic acid usually up to 25 per cent. Some kilns give 28 to 30 or even 35 per cent. The maximum is 44 per cent. as may be calculated from the fact that 1 kilo of chalk requires 370–400 calories for calcination; coke on burning produces 8000 calories, so that at least 5 per cent. of coke must be added. 100 kilos of limestone then yields 1440 cubic metres of gas of 44 per cent. carbonic acid.

Instead of the usual suction and force pumps for handling the gas a Körting's steam jet blast has been used. This jet is placed in front of the washer, so that no extra dilution of the carbonated juice occurs.

Kilns with Gas Furnaces.—A further improvement on the kilns with exterior hearths is due to the introduction of gasogene hearths where carbon monoxide produced from coke or other combustible enters the kiln by a series of openings at regular distances around the wall, the air necessary for complete combustion passing through the thick layer of burnt lime below these openings, serving to cool the lime before it is withdrawn, and being itself heated sufficiently to ignite the gas coming from the producer. The gasogene kiln of Toisoul and Fradet burns 13 cwt. of coke to 100 of limestone and gives a gas containing 28 to 30 per cent. of carbonic acid. The Naumann and the Kulmiz kilns have 3 or 4 hearths arranged around the kiln, whence the gases circulate through a series of flues to reach the limestone. The air necessary for combustion enters through the openings from which the burnt lime is removed. The air supplies and the working of the pump require careful adjustment in these kilns. In the Fichet and Heurtey producer, Fig. 152, the air is supplied by an injector in quantity exactly necessary for combustion, and it is only essential that the working of the pump should be regular. These kilns give a gas containing 30 to 35 per cent. of carbonic

acid, and burn 7 to 9 cwt. of anthracite to 100 of limestone. A is the producer with revolving hearth worked by the handle

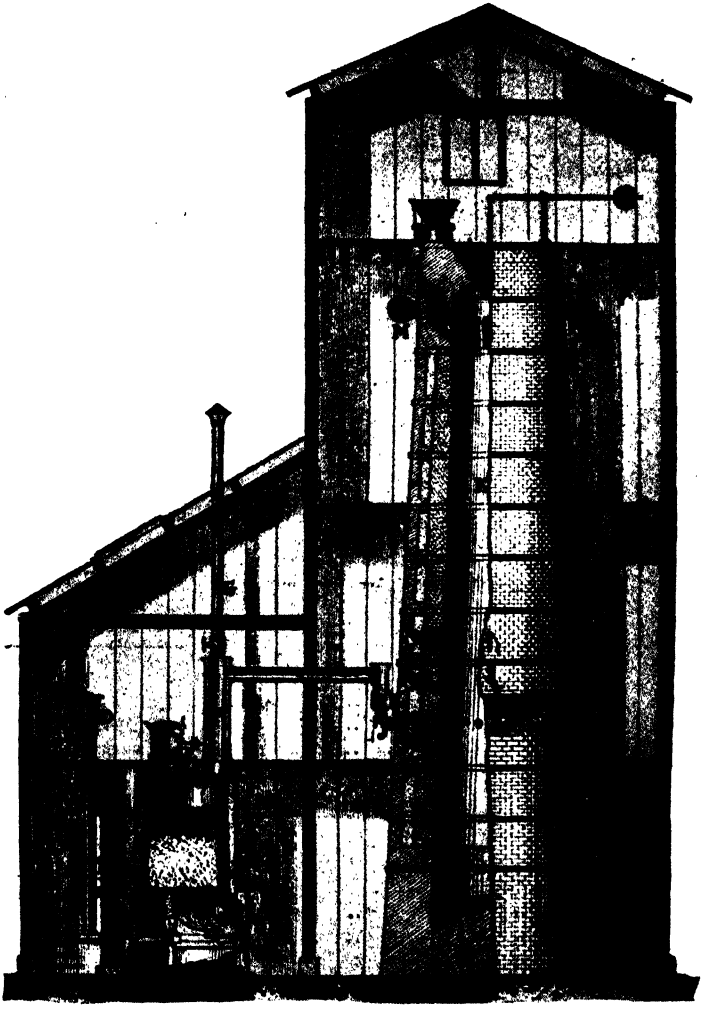

FIG. 152.—FICHET AND HEURTEY'S LIME KILN.

B, C the clinker covering the sole plate, D the steam air-injector, D the feed hopper, F gas outlet, G escape to the

atmosphere, H air inlet to producer, I distributing circular flue, J valves and sights, K kiln, L feed cone, M collector for the carbonic acid gas, N poke holes, O outlet for lime.

The steam entering along with the air decomposes in contact with the incandescent carbon producing carbon monoxide and hydrogen, the mixture of gases having a high calorific value. The steam, moreover, prevents the running together into lumps of the ash or clinker. Any fuel may be used, but coke or anthracite are preferable to avoid deposits of tar in the pipes.

The kiln may be of any type, but the inventors adopt the truncated cylinder with the gas admitted at one third of the height which is 45 to 48 feet, the diameter where the gas enters being 9½ feet.

The lime to be used in defecating is first slaked in special tanks furnished with agitators. It is then diluted with sufficient water, carefully strained, and constitutes a milk of lime having a density of 20° to 25° B.

Treatment of the Lime Scums.—The scums collected in the lime defecation process contain in the fresh state sugar, numerous nitrogenous matters, and other fertilising elements. Plicque, working upon scums, analysing

Water	52·70 per cent.
Sugar	3·50
Nitrogenous matter	3·72
Organic matter	9·24
Phosphates	4·77
Lime, silica, iron, etc.	26·07

obtained the following proportions of valuable products :—

Charcoal	50·0 per cent.
Lime	35·5 ,,
Alcohol at 85°	2·0 ,,
Sulphate of ammonia	1·0–2·0 ,,

Much better value is thus obtained for the scums than by selling them in a crude state at a low price for manuring purposes.

The method of treating the green scums to remove their excess of moisture is by the use of filter-presses. The scums of the two carbonations are collected in the same cistern, fitted with two *monte-jus*. The escape pipes from these *monte-jus* reunite into one, so that though the *monte-jus* are used alternately, there is no fluctuation in the supply of scum to the filter-presses.

Filter-Presses.—Trink's press is composed of a series of cloth bags, held in all parts against metallic plates pierced with holes. The *monte-jus* forces the dirty liquid into these bags; the juice runs away clear, while each bag fills with the solid scum, which is strongly compressed by the action of the steam in the *monte-jus*. When the bags are full, the juice no longer escapes; then, to remove the superfluous moisture from the scum, steam alone is forced in. The steam condenses and washes the scum, dissolving the last traces of sugar, and yielding a slightly saccharine liquor. The action of the steam is continued until, having forced a passage, it escapes at the lower part of the apparatus. Steam is then shut off, and the operation is concluded.

To enable the bags to be opened easily, they are formed of two quadrangular cloths put together, the four borders of which are pinched, two and two, between wrought or cast-iron frames, presenting only one opening for the passage of the scum and steam. The frames, and consequently the set of cloths forming bags, are separated by metallic plates, which permit the juices to escape; these juices run along the plates, and collect in a gutter closed by a tap, which serves to regulate the speed of the outlet, and even to suspend the working of a cloth, when it is torn for instance, without stopping the whole press.

The advantages claimed for it are that it is easy to adjust all the frames to the same height, and that the dismounting and replacing of the frames is much facilitated. According to another plan of Farinaux the working of the press is rendered

largely mechanical, so that one labourer out of two is dispensed with. The bags are made of sail-cloth, and last 24 to 30 days, while those of jute endure only 5 to 8 days.

In Johnson's filter press, Fig. 153, the patent pyramid drainage surface insures the maximum area of filter cloth in the condition of maximum efficiency, a free and unobstructed passage for the filtrate to the outlets after it has passed through the cloth, a free passage for the wash water to every part of the cake to be washed, and with thick liquids an increased efficiency of from 15 to 30 per cent. in the quantity of the liquid filtered. These presses are the easiest to clean, requiring only to be brushed horizontally and vertically. They are superior to any form of perforated covering plate, which are difficult to clean, rapidly corrode in contact with cast-iron plates, and obstruct the passage of the filtrate, owing to the greater portion of the filter-cloth being backed with solid impermeable metal. The patent hydraulic lipped collars as supplied in type D machines for making the joints in side lugs outside the cloths are the most efficient and perfect contrivance for the purpose and far superior to india-rubber rings let into the grooves which rapidly lose their elasticity, causing the joints to leak. The hydraulic collars pass right through the plates, and on being brought lightly into contact round the adjoining passage, the internal working pressure does the rest, and insures perfect tightness; the higher the pressure the tighter the joints become. By their use, no holes whatever are required in the cloths, a simple piece the proper length being cut from the web and hung over the plate; and there is also perfect adaptability to the varying thickness of the cloth. Filter paper can be used on these machines. The usual method of feeding the press is by means of a *monte-jus* worked by steam or compressed air; the latter of course is best.

On the Continent, the presses of Dehne, the Maschinenfabrik Grevenbroich, and the Braunschweigische Maschinenbau Anstalt are well known.

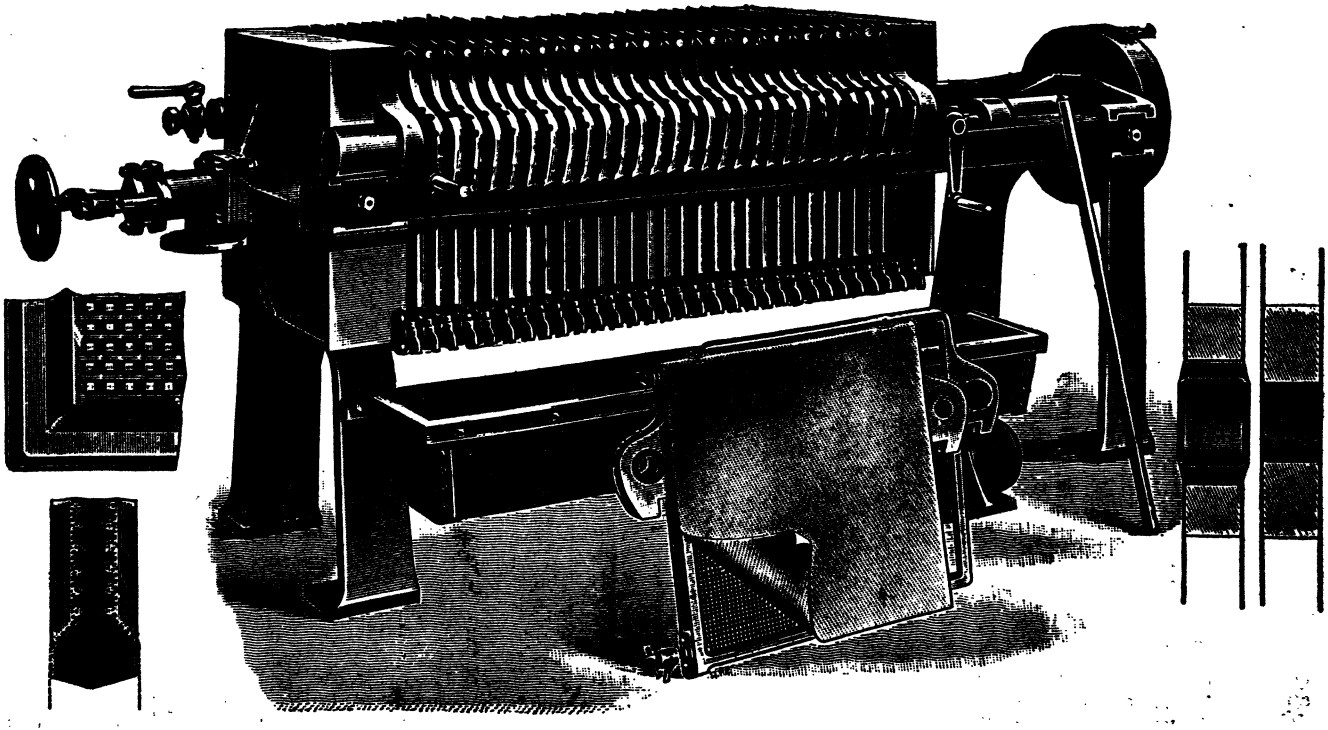

FIG. 153.—JOHNSON'S PYRAMID FILTER PRESS.

Filter presses, under the name of Howard's press filter, are said to have been used in English refineries as early as 1834 in place of Taylor's bag filter. Neadham and Kite used the chamber presses for filtering pottery clay and beer yeast. These presses having come to the notice of Jacquier, the engineer of Robert, at Seelowitz in 1864, he conceived the idea of forcing the whole of the saturation juice and scum through such presses specially arranged for the conditions of the sugar factory, and these presses were first made by Danek in Prague.

Those of Dehne solved the problem of washing the cake free from sugar in the press in an altogether novel manner, by providing separate channels for introducing juice and water and for the escape of air.

If the lime used is of poor quality or used too sparingly, and defecation is improperly carried out or saturation incomplete, the filter presses do not run satisfactorily, the deposit having a slimy character instead of being granular. Pectous substances, silicic acid, alumina, fat and fatty acids, and magnesium salts also tend to impede filtration.

Beanes was the first to suggest the use of ozone as a bleaching agent, and a large plant to work his process was erected at Gadesden's refinery in London in or about 1872, but its use was soon given up, as it was found that animal charcoal was cheaper and more effective.

Verley's Ozone Process.—Albert Verley in an addition to his process for the decolorisation of juice by means of ozone (French patent, No. 266525) describes the procedure for beetroot juice, although it is said to be applicable to cane juice or any sugar solution.

The juice is first made alkaline to the extent of 0·2 grm. CaO per litre by means of lime or any other alkaline earth, and then filtered and raised to a temperature of 20° C. The ozone or ozonised air, after washing with milk of lime, is then passed through the liquid with violent agitation. As the absorption of ozone is very rapid at the commencement, and

very slow towards the end of the process, he recommends a series of iron or lead-lined absorption tanks arranged in battery.

The juice is next treated with a reducing agent, such as Gladstone and Tribe's zinc-copper couple, which is applied to the juice at about 80° C. Other reducing agents are mentioned. Wincelas' aluminium amalgam (which has the advantage of acting in the cold); chromous or manganous sulphate, both preferably formed in the liquid itself by adding the persalt and a reducing metal. In every case where use is made of solid reducing agents, agitation is essentially necessary. For purposes of reduction, electrolysis may be applied directly to the juice, the cathode being formed of an oxidisable metal.

Finally, hydrosulphurous acid may be added to the juice. Fradiss, who has studied the mode of action of ozone on the juice, concludes that ozone may act as a purifying agent on new diffusion juice, but that it will never from its power or economy supplant carbonation, whether single or double.

Ozone removes the characteristic odour of all the products of beetroot sugar works, and, employed on first jet raw syrups, makes it possible to obtain sugar of the same quality as refined sugar. Ozone acts as a decoloriser in acid solutions, without destruction of sugar, at least at a low temperature. In alkaline solutions, and chiefly in presence of alkaline carbonates, ozone attacks sugar, converting it into carbonic acid and water. The presence of organic non-sugar seems to weaken the action of ozone in oxidising sugar.

The process has been applied to beetroot juice in France where favourable opinions were expressed, but nothing is known as to its application to cane liquor.

Beanes' Ozone Process.—A patent for the treatment of juice by means of ozone has also been taken out by E. Beanes (English patent, 11511, 1898), in which the defecated juice (either beet or cane) is treated by ozone during the whole time of evaporation. A current of 2000 to 10,000 volts is used, and

the liquid is skimmed or filtered as soon as a density of 30° B. is reached, the evaporation being then continued to grain.

The Ranson's Sugar Process, Ltd., have been granted a French patent for the purification and decolorisation of saccharine solutions, especially cane juice and syrups. It is first pointed out that cane juice is worked in two ways, either by defecation or carbonation. Defecation is simple and cheap, but does not give white sugars, whilst carbonation requires a large outlay and cheap lime, but yields white sugars. The object of this invention is to combine the advantages of both methods. The process is preferably applied to the syrups as they come from the evaporator, at a density of 20°–25° B., and temperature of 50°–55° C. To 2000 parts of syrup, 35–40 parts milk of lime at 10° B. are added and well stirred. The alkaline liquid is then treated with sulphurous acid until neutral to litmus, frothing being prevented by a little oil. To the neutral syrup 0·2 to 0·3 part of powdered metallic tin, or 0·5 to 1 part of zinc are added in the form of a paste and the liquid thoroughly mixed. The temperature is then raised to 90°–96° C., whilst stirring is continued, and the syrup is finally filtered. Two filtrations are desirable, first through coarse cloths in the filter press and then through fine cloth or sand. The treated syrup has a bright yellow colour, and is free from organic impurities; char filtration is unnecessary. The lime used is about 0·05 per cent. on the canes; the juice may be treated direct from the mills if preferred.

Filtration through Gravel.—The substitution of gravel for charcoal as a filtering medium has been adopted with success in Hanover. The process was introduced by Otto Licht and Co., of Magdeburg, who hold the patent rights and charge a royalty for its use. It is said that gravel is as efficient as good char, and far better than inferior char, while in the matter of cost it is enormously superior, the first cost being very much less, and no outlay being incurred for reburning.

Mechanical Filtration.—The filtered second carbonated

juice is always subjected to a further filtration whether it receives a treatment with sulphurous acid or not; and during this operation it is maintained boiling hot so as to throw down all the carbonate of lime possible. As the use of animal charcoal has been found too costly, unless specially fine sugars are to be produced, various methods of mechanical filtration have been adopted. The suspended particles being very fine, low pressures only (about 10 feet head) are possible, as greater pressures would force the particles through the filtering medium. Filter presses may be used, but it is more convenient to employ an arrangement with a large filtering surface. One of the forms is that of a tank containing a large number of frames over which cotton sheaths are drawn, the juice filtering from the outside to the narrow space within, the frame keeping the cloths apart. This is essentially the form of the bag filter of Kasalowsky and the Excelsior filter of Dehne. A simpler form is the gutter filter of Puvrez which consists of a tank about 6 feet long and 16 inches deep divided into narrow compartments in each of which is placed horizontally a stocking or bag the mouth being tied round the inlet and the other end tied to a wooden plug. The boiling hot juice enters the bag under a pressure of 3 feet of head; the bags should easily yield to pressure with the finger. The filters run for three or four hours, when fresh filters soaked in warm water are started. The Puvrez filters in common with Taylor filters have the disadvantage in filtering from the inside to the outside of enlarging the pores when the difficulty of filtration, and with it the pressure, increases, and they cool the juice rapidly and expose it to the air. Where the direction of flow is reversed these difficulties are avoided, and the separated matters instead of adhering to the cloth, in great part are deposited as a sediment in the filter, whence it may be run off from time to time.

The Kasalowsky filter, Fig. 154, is formed of a rectangular wrought-iron tank with sloping bottom. At the upper part is

a cast-iron rim forming a seat for the counterpoised cover, which makes a tight joint on the tank with an indiarubber ring and bolts. The filtering frames are suspended in the tank, each being formed of a web of spiral galvanised steel wire, supported on a pipe perforated on the lower side. The filtering cloths are of thick cotton, sewn in the form of a bag with flaps left at the top to wrap round the pipe after the frame is

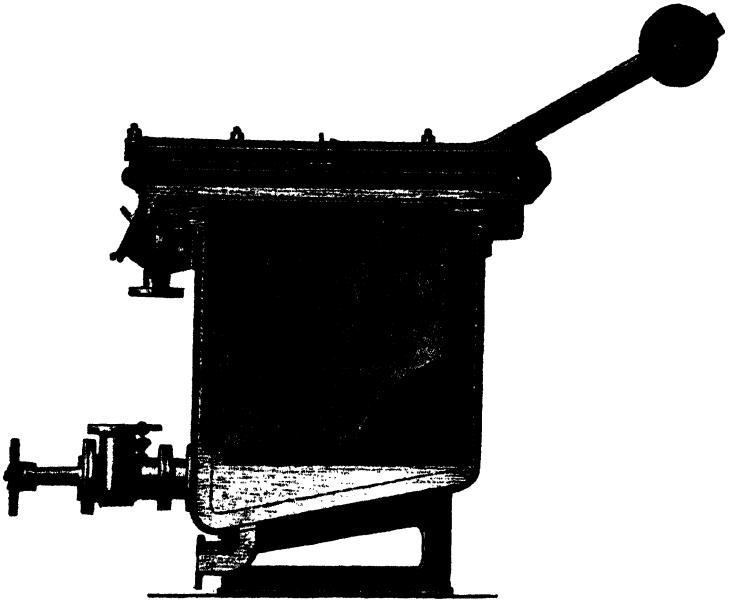

FIG. 154.—KASALOWSKY'S FILTER.

inserted into the bag. The whole is made tight by a zinc clip. The use of a metallic web of spiral thread has the advantage of leaving the whole of the filtering surface of the cloth free since it only bears on the exterior arcs of the spirals. The pressure necessary for filtration is regulated by the supply cock, which is opened more fully as the impurities accumulate on the cloth. One of the great advantages of this

filter is the ease and readiness with which it can be set up or cleaned, the frames being merely suspended in the tank, and the pipes forming a tight joint by their own weight. Each bag having about one square metre of filtering surface can filter 100 hectolitres (2200 gallons) of carbonated juice in 24 hours, or 35 hectolitres of syrup at 25° Beaumé, or 30 hectolitres of syrup at 30° Beaumé.

In the Maignen filter asbestos is used as the filtering agent.

The use of sand and gravel for filtering sugar juices was patented in 1878 by Mayer, who claimed that, as regards the mechanical aspect of filtration, it was equal to animal charcoal and far less costly. The sand was used of the size of lentils or peas, and was washed with dilute hydrochloric acid to remove lime.

The "Perfect" Sand Filter.—The Breitfeld-Danek Engineering Co., Prague, are the patentees and manufacturers of a sand filter suitable not only for defecated cane juice but capable of filtering molasses of 40° Beaumé at a temperature of 194° F. The filtration takes place under a pressure of about 9 inches. Sharp small grain river sand gives the best results. The only expense attached to the working consists in washing the sand, only a small quantity of sand being lost. The sand is washed automatically by means of injectors, either in the filter, or in special vats fitted with injectors, and is transferred between the filter and these by means of injectors, so that all difficulties of transport are overcome.

A "Perfect" filter containing 900 kilos of sand filtered 10,000 kilos of first running syrups in a raw sugar factory in 24 hours. The syrups were diluted to 30° Beaumé and heated to 176°–194° F. The washing took 45 minutes and required 700 kilos of water. The filter, Fig. 155, is filled with sand to the pipe D, by which the liquid to be filtered enters. The pipe is split at the upper side so as to distribute the liquid over the whole length of the filter. The liquid should be admitted very

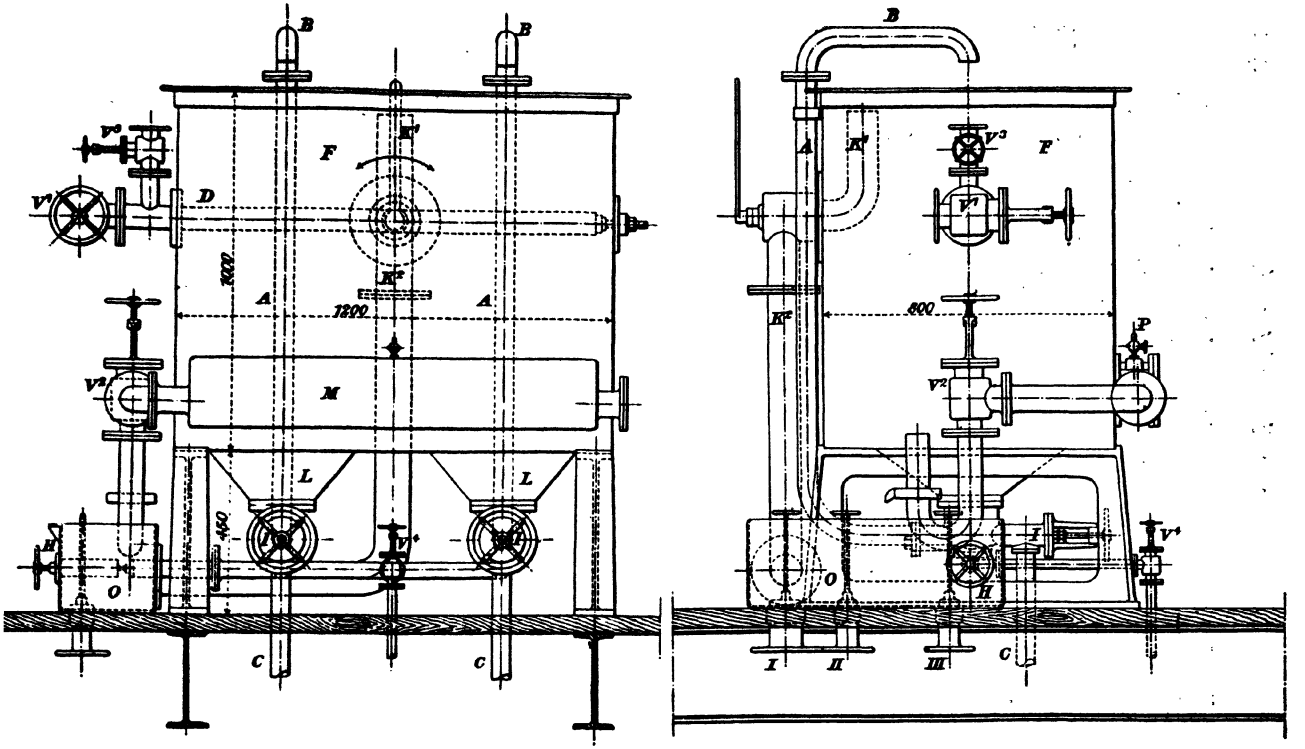

FIG. 155.—THE "PERFECT" SAND FILTER.

slowly at first to avoid disturbing the surface of the sand. As soon as the liquid is about 9 inches above the level of the sand, the inlet valve is set so as to allow the same amount of juice or liquor to enter as flows out filtered. On starting the filter the valve V_2 must be partly closed, until clear liquor is obtained. After a time the flow diminishes through the accumulation of dirt on the surface of the sand, even when the valve V_2 is fully open. The dirt may be moved by a scraper, and filtering continued without the necessity of washing the sand until the outflow, becomes again reduced. The valve V_1 is then closed, and the juice above the filter medium drained off through the movable knee, and hot water is allowed to enter through the valve V_3 and the pipe D to wash the filter. The valve V_2 is half closed while this proceeds, so that the water mixed with liquor may flow out in constant quantity and quality. The first portions are run among the filtered liquor, but the more impure portion is used for dilution; the remainder is drawn off from the sand through the cock H. When the sand is washed, it is steamed, the valves V_2 and V_3 being closed, steam being admitted through V_4, the cock H remaining open. The washing proper is made by opening the injector valves I I to admit hot water through C at a pressure of at least 30 lb. per sq. in. The water forces its way through A_B and flows through the sand from the bottom to the top, the dirty water passing away through the knees K_1 K_2 into the receiver N, and thence to the drain. The water remaining above the sand is drained off through K, and the surface of the sand smoothed. The pipe D must be removed before washing the sand.

CHAPTER XV.

CONCENTRATION OF THE SYRUP.

THE next operation is the concentration of the "thin" juice, the removal from it of the excess of water, so that the liquid may become sufficiently dense, or saturated with sugar, to enable the latter to crystallise out. In this section, the treatment of cane sugar and beet sugar are precisely similar; but there are a few variations in the apparatus employed, the forms employed in the cane-sugar industry being largely of English manufacture, while those used in beet-sugar factories are essentially Continental.

The first step is to boil the watery liquor in a double-effect or triple-effect apparatus till so much of the water has been evaporated that the density marks 25° B. It is then known as "thick juice." It next goes to a cistern where it is heated to boiling, and again filtered through animal charcoal, by which more colouring matter is removed, as well as some albuminous bodies that are more readily absorbed from dense than thin liquors. After this second filtration, the juice is brilliant transparent, and almost colourless, but still contains much water. This is finally removed by boiling *in vacuo*, by means of the vacuum-pan, already described at length under Cane Sugar (pp. 249–300).

CHAPTER XVI.

CURING THE SUGAR.

THE sticky mass of impure sugar crystals obtained from the vacuum-pan has next to undergo treatment which will separate the crystals in a pure white state. The old methods of drainage have been described under Cane Sugar (see p. 303); in the beet-sugar industry, centrifugal machines are now exclusively employed for the first operation. The principles and construction of these machines will receive detailed attention in a later chapter (see pp. 304–8).

It was formerly the usual custom to convey the massecuite from the vacuum-pan to the centrifugals in small trucks holding from 2 to 5 cwt. After the mass had cooled somewhat and set, it was broken up in a pug-mill and cutter as shown in Fig. 156, and made into a mash by the addition of syrup before being spun in the centrifugal. These small vessels have almost entirely given place to larger receivers, often jacketed for heating and cooling, and provided with stirring gear. The crystallisers, as they are often called, are long, cylindrical or U-shaped vessels capable of taking the whole charge of a pan. By suitable control of the rate of cooling, the formation of fresh points of crystallisation or "false grain" is avoided, and the motion prevents any tendency for the grain to settle out and allows the cooling mother syrup to deposit its excess of sugar on the grains already formed in the pan, so that the mass is in a suitable condition for centrifugalising, and the syrup leaves the crystals more freely than

it would from mixed grain. Fig. 157 shows a mixer as made by the firm of Grevenbroich near Cologne. It has a double

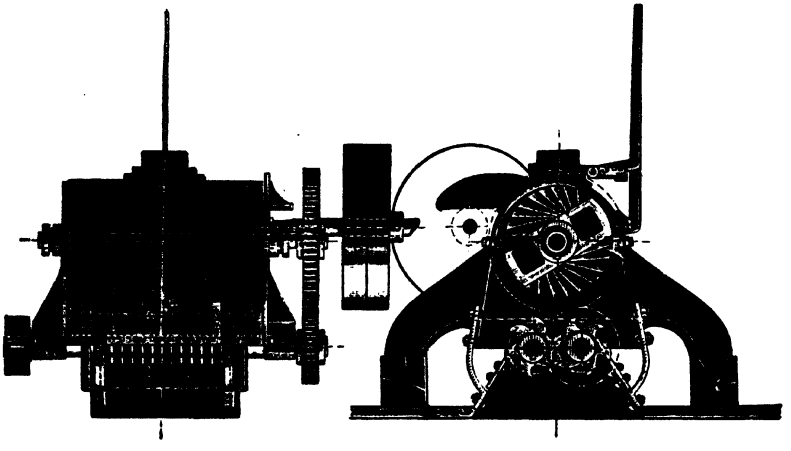

FIG. 156.—PUG MILL AND CUTTER.

casing all round except at the ends, constituting a jacket for cooling by water or maintaining the heat by steam. The

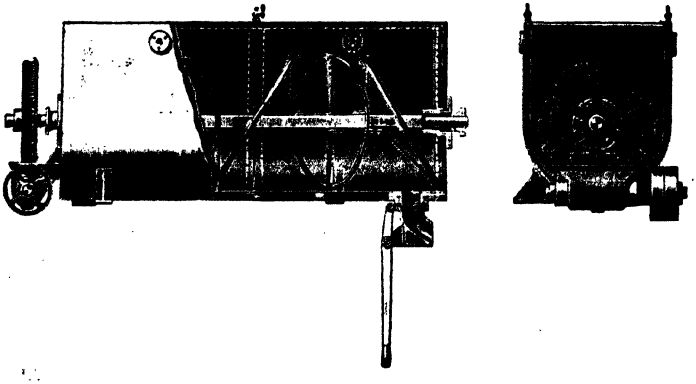

FIG. 157.—MIXER.

stirrers revolve slowly and consist of separately arranged ellipses driven by a worm and worm wheel. The casing is

provided with inlet and outlet cocks, and a slide valve outlet for the massecuite. In Fig. 158 is shown the general arrangement of vacuum-pan, crystallisers in motion and centrifugals as designed by the Braunschweigische Maschinenbau Anstalt.

First, Second, and Third Sugars.—The centrifugal charged with the dirty crystalline mass is made to revolve rapidly till the colour has changed to reddish, when, without stopping the rotation, a small quantity of *clairce* or pure syrup at 30° B. is poured in; the result of this is a clear yellow tint in the whole mass, whereupon dry steam is injected, and soon the sugar becomes perfectly white. This is termed sugar of *premier jet* or "first throwing." About $\frac{5}{7}$ of the total sugar recoverable in a crystalline form is obtained at this first treatment. The liquid flowing away thus contains the remaining $\frac{2}{7}$ of crystallisable sugar, besides that which is uncrystallisable. This liquor is run into large tanks, reheated, filtered, boiled to a stringy consistency, and stored in cisterns during the whole period while the first sugars are being cured. It is then taken to be passed through the centrifugals, either alone, or with the addition of a little pure syrup, and thus affords a certain quantity of second sugar. The molasses drained from this in the centrifugals is stored in immense reservoirs in a room heated to 40° C. (104° F.). At the end of a few months, these molasses are put through a centrifugal, and yield third sugars, with which are crystallised large proportions of saline impurities.

Yields.—The results ordinarily obtained in making beet sugar are as follows:—

100 lb. of beet affords 15 lb. of raw (uncured) first sugar (massecuite), which loses 33 per cent. of its weight in the centrifugal, thus leaving 10 lb. of polarisable sugar in the first sugars.

The flowings from the first sugars yield 75 per cent. of raw second sugars, which, after curing, furnish 27 per cent.

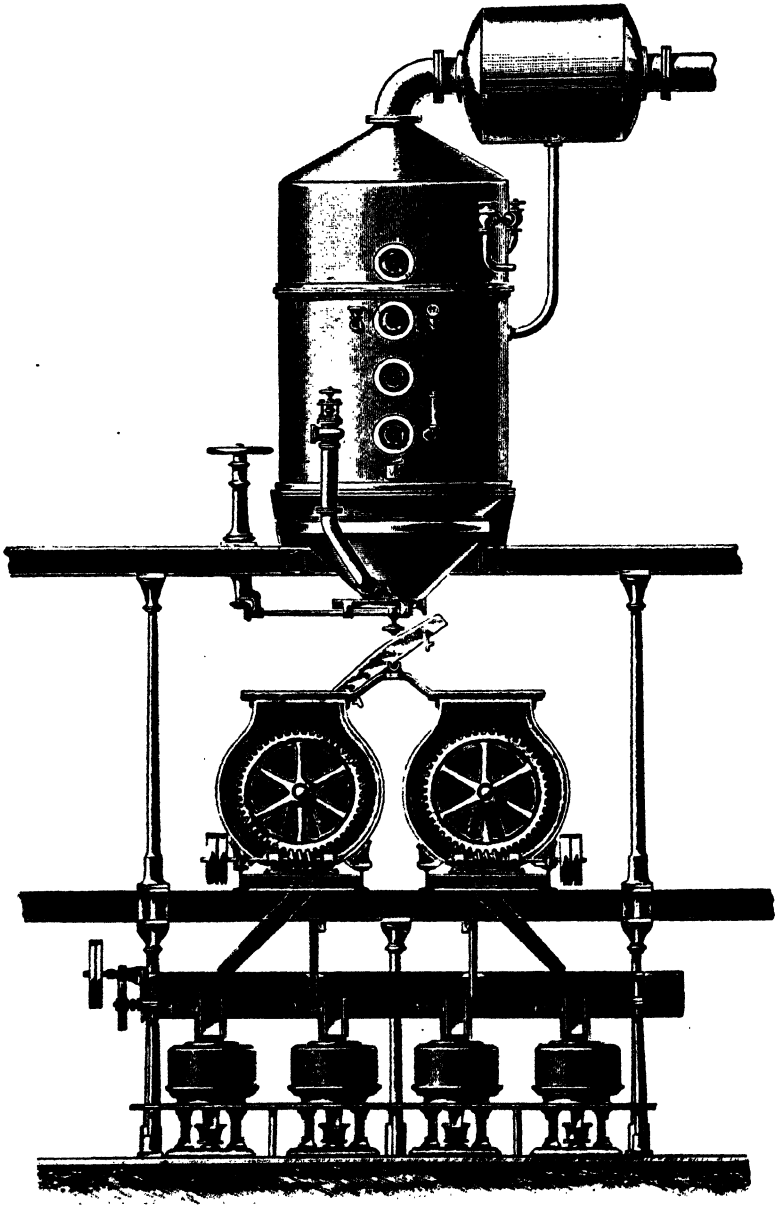

FIG. 158.—GENERAL ARRANGEMENT OF VACUUM PAN, CRYSTALLISERS IN SECTION AND CENTRIFUGALS.

of their weight of second sugars, or 1 lb. on the 100 lb. of beetroot.

The curing of the second sugars gives a very variable quantity of molasses, which renders up about 19 to 20 per cent. of its weight of sugar, or about ½ lb. of third sugars on the 100 lb. of beetroot.

The molasses properly so-called contain 50 per cent. of sugar, and as they amount to 2 per cent. of the beet, they carry away 1½ lb. of sugar on the 100 lb. of beet, bringing the total yield of sugar to 12½ per cent., out of the 14 per cent. originally contained in the roots, the 1½ per cent. difference representing losses during manufacture. Thus 100 lb. of beetroot give :—

First sugars	10·00 lb.
Second ,, ...	1·00 ,,
Third ,, ...	0·50 ,,
Molasses	1·00 ,,
Losses : Sugar in the pulp	0·50 ,,
,, ,, scums	0·35 ,,
,, lost in the filters, etc.	0·50 ,,
Miscellaneous	0·15 ,,
Total	14·00

Thus the average yield of crystalline sugar from the beet is 11½ lb. on the 100 lb. of root, or $\frac{8}{10}$ of what the root contains ; while the final molasses take away as much sugar (which is lost so far as its sugar is concerned) as is represented by the actual yield of second sugars. The recovery of this 1 per cent. of sugar in the molasses, and the better utilisation of the other constituents of the molasses, are subjects which have been much studied of late. The treatment of the molasses is discussed in the next chapter.

The following analyses due to Claassen are taken from the books of a sugar factory, and are average figures for a whole season.

(*a*) Analysis of a factory working the syrups boiled to string proof with subsequent cooling in tanks :—

—	Thick Juice	Massecuites			Molasses	Raw Sugar		
		1 Boiled with Syrup	2	3		1	2	3
Polarisation	47·9	83·5	67·1	58·7	47·8	96·1	92·1	90·8
Water	47·7	7·55	10·42	11·5	21·83	1·50	2·56	2·70
Ash	1·72	3·48	8·52	..	11·78	0·93	2·07	2·81
Organic non sugar ..	2·67	5·47	13·96	..	18·59	1·47	3·27	3·69
Alkalinity..	0·039	0·064	0·12	0·14	0·08	0·011	0·035	0·030
(*b*) Analyses of a factory boiling the syrups to grain :—								
Polarisation	54·9	84·65	70·35	..	49·7	96·15	94·0	..
Water	41·0	6·93	7·32	..	19·33	1·40	1·85	..
Ash	1·63	3·24	8·56	..	11·92	0·88	1·60	..
Organic non sugar ..	2·47	5·18	13·77	..	19·05	1·56	2·55	..
Alkalinity	0·034	0·062	0·137	..	0·14	0·013	0·020	..

Besides the utilisation of molasses for the production of spirit it has found applications in the preparation of various cattle feeds, and in smaller quantities for the manufacture of blacking and fire-proof stone, and it has also a certain value as fuel, one pound of molasses being capable of evaporating about two pounds of water.

MOLASSES

CHAPTER XVII.

PROCESSES FOR THE RECOVERY OF SUGAR FROM RESIDUAL SYRUPS OR MOLASSES.

THE following analysis represents the average composition of beet molasses :—

	Per cent.
Sugar	50
Other organic matters	20
Ash (mineral matter)	10
Water	20

All the sugar which can be profitably removed from these molasses by the ordinary process of concentration and crystallisation has been already taken out, the mineral and organic matters preventing the separation of that still remaining. The molasses are very dark in colour and have an exceedingly disagreeable taste and odour, so that they are utterly unfit for consumption as treacle, and therefore usually pass into the hands of the distiller, by whom they are fermented, yielding an inferior kind of spirit, the residue left, after distilling the alcohol, being employed as a manure under the name of "vinasse." The vinasse is often calcined, and a considerable amount of potash salts is obtained in this way. Many attempts of a more or less successful character have been made to recover the sugar from beet molasses, and a short account of the most important of these will now be given.

The Osmose Process of Dubrunfaut.—In the earlier part of this work a description has been given of the principles upon which the "diffusion process" is founded. In describing the action of a porous membrane, when brought into contact on both sides with various liquids and solutions, Professor Graham discovered that many substances could be separated in this manner, and he arranged these in two great classes, viz. "crystalloids" and "colloids." The first class embraces all soluble bodies of a crystalline character, and these pass through the membrane with a considerable amount of facility, whereas the bodies of the second class, colloids (glue-like), are almost entirely arrested by the membrane in question. Even with crystalline substances, there is a considerable difference in the rate at which they pass through such a membrane, thus most salts will pass through much more freely than sugar, and the object of Dubrunfaut's process is to take advantage of this fact. In carrying this into operation, an apparatus is employed termed an "osmogene" (Fig. 159), consisting of two chambers separated by a diaphragm constructed of parchment-paper, or of other suitable material. One chamber contains molasses, and the other water. Each compartment is a wooden frame, which may be of the following dimensions: 39 inches wide, 26 inches deep, and about ½ inch thick. Four wooden stays divide the interior of the frame into five compartments, communicating by means of openings. On each face of the frame are fitted leaves of parchment-paper, held in position by thin cords. The molasses entering at the bottom rise in a serpentine manner into the five compartments of the frame, and escape at the top. A second frame, exactly similar, and filled with water, is placed in juxtaposition to the first, so that the same sheet of parchment-paper serves to separate the two frames, and consequently the two liquids. This constitutes one "element" or couple of the osmogene. Several such placed in rotation form the complete osmogene.

The circulation of the liquids is established by means of channels in the frames, the one at the left, below,

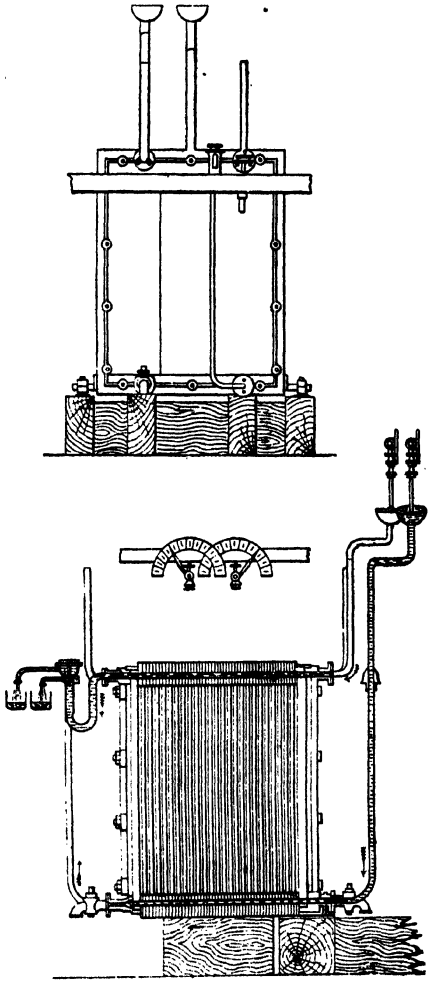

FIG. 159.—OSMOGENE.

communicating only with the molasses frames, the other, above on the right, for the circulation of water. All the

frames are screwed together by long bolts. They usually number 50, but sometimes amount to 100. To change the parchment-paper the screws are undone, and the frames are laid on the table. The molasses enter at a temperature of 60° to 75° C. (140° to 167° F.), and the water at 85° C. (185° F.); the density of the molasses is reduced from 41° B. to 30° or 25° B. It might be still further lowered, with corresponding cost incurred by the dilution.

A modification of the osmogene has been introduced by Lilpop, Rau, and Löwenstein, of Warsaw, in which it takes the form of Trink's filter-press. The frames to the number of 51, rest by means of projections upon two horizontal arms, and are screwed together. The discharge of the apparatus and change of liquid are facilitated by arranging the whole to rotate on its axis.

The increased purity of the osmosed molasses amounts to 5 or 10 per cent. with a corresponding increased yield of sugar. It is boiled to string proof and allowed to stand in vats to crystallise. Although the sugar is low in ash, it is dark coloured and difficult to refine, and the molasses from it is unsuitable for further recovery of sugar. The osmose water may be concentrated for use in the distillery, the resulting vinasse being converted into crude carbonate of potash.

Lime, Baryta and Strontia Processes.—These processes depend upon the fact that each of the above-named alkaline earths is capable of forming compounds with sugar possessed of only a slight degree of solubility. A compound of this class having been formed by mixing one of the bases in question with molasses, the almost insoluble precipitate obtained is next purified by washing with water, or with alcohol, as in the so-called "elution" processes, and afterwards suspended in water, through which a current of carbonic acid is passed. The sugar under these circumstances enters into solution whilst the base into which it was united is converted into an

insoluble carbonate, and may be regenerated by the action of heat. In the case of sucrate of lime, it is sometimes directly added to the raw beet juice, the free acids of which it serves to neutralise, being used for this purpose in place of milk of lime.

Owing to the low price of sugar the processes depending on the use of alcohol and the more costly methods have been abandoned, the only processes now used being of osmosis and separation, the latter being chiefly carried out at special molasses desugarising stations rather than in the beetroot sugar factories.

Elution Process.—In working this process, the molasses are well mixed with a quarter of their weight of lime, when the sugar is converted into tribasic sucrate of lime, and a solid mass is produced. According to the original method of Lair and Bilange, this crude sucrate of lime was washed with water to remove adhering impurities, but as the sucrate of lime is dissolved to some extent by water, Dr. Scheibler proposed to substitute alcohol, in which the sucrate is insoluble.

Seyferth's Process.— This modification of the elution process was carried out by Seyferth in the following manner: The molasses employed had a density of 43° to 44° B. at a temperature of 30° to 33° C., and to this was added 30 to 40 per cent. of quicklime, which had previously been made into a very fine powder, and mixed with just enough water to form a sort of cream. The whole was then well mixed, when the heat produced by the combination caused the mass to become solid. This crude sucrate was next reduced to small fragments and placed in a number of vessels called "elutors." It was then washed with alcohol of 35 per cent. in a systematic manner, each fresh lot of sucrate being first washed by the alcohol which had been already partially charged with impurities, and pure dilute alcohol being used for the last washing. By being thus washed five or six times, the impurities were almost entirely removed. Steam was then

passed into the "elutor," any alcohol adhering to the sucrate being recovered by distillation, and the sucrate itself being reduced to a paste capable of easy removal, which could be used in the defecation of beet-juice, or from which the sugar could be recovered by treatment with carbonic acid gas.

The various elution processes require a costly outlay for plant and in addition to the danger attendant on working with large quantities of alcohol, the sugars can only be obtained indirectly with advantage. On the other hand the juice obtained is of 84 to 88 purity, there is little loss of sugar and the residue after recovering the alcohol can be used direct as manure.

Manoury's Elution Process.—This bears considerable resemblance to the foregoing, and was carried out by Manoury at the factory of La Capelle, near Dunkirk. The molasses were intimately incorporated with milk of lime, in a specially constructed mixing apparatus, and, by this means, the sucrate of lime was obtained in small granules, which were afterwards lixiviated with alcohol of 40 per cent. in closed elutors.

Steffen's Process.—In working this process, the tribasic sucrate of lime is first produced in the following way: Beet molasses are diluted to 6·6° B., when they contain 7 to 8 per cent. of sugar, and small portions of freshly burned and finely powdered lime are added at frequent intervals, the temperature not being permitted to exceed 59° F. The sugar is thus precipitated in the form of tribasic sucrate of lime, which is but slightly soluble, requiring 200 parts of water to dissolve it. For the precipitation of 100 parts of sugar it is necessary to employ 93·4 parts of lime. The sucrate, which has the appearance of dirty milk of lime, is pumped into a filter-press, which is so made that the sucrate can be washed *in situ.* The liquor passing through the press is employed as manure, and the sucrate is washed with water, the washings being used to dilute a further amount of molasses. The nearly pure tri-

basic sucrate of lime remaining in the filter-press may be decomposed by hot water, which dissolves the monobasic sucrate of lime, leaving two-thirds of the lime in the filter-press; the rest of the lime may be thrown down by a current of carbonic acid gas. On allowing the carbonate of lime to subside, or on separating it by filtration, and evaporating the liquid, the sugar may be obtained. The tribasic sucrate of lime is, however, generally employed in beet sugar factories as a substitute for the lime in defecating the raw juice. This process of Steffen is, in some respects, the most successful mode of recovering sugar from beet molasses. It is not, however, adapted for the treatment of syrups in a refinery using cane sugar, as the glucose contained in the syrups is an obstacle to its employment.

Steffen's molasses process does not appear to pay unless worked with a beetroot sugar factory, the sucrate being added to the raw juice instead of fresh lime, the purity of the sugar obtained approximating to that of the direct juice. The sugars produced have, however, certain peculiarities of crystallisation, and contain raffinose and lime salts not separable in the process, so that they frequently sell at a lower price than other sugars.

Strontia Process.—Dr. Scheibler thus describes the nature of his modification of this process. If to a 20 or 25 per cent. solution of cane sugar there be added at 70° to 75° C., with agitation, an equivalent quantity of crystallised strontium hydrate, a super-saturated solution of strontium monosaccharate is obtained, from which, after a time, either unaltered strontium hydrate may be caused to crystallise out, or the monosaccharate to separate, according as either a crystal of the former or of the latter is introduced. Strontium monosaccharate has the following composition: $C_{12}H_{22}O_{11}$, SrO, when in the anhydrous state, and the same, plus $5H_2O$, when crystallised. It is soluble in cold and more easily in warm water, and is decomposed with formation of the bisaccharate, when a solution is

heated above 60° C. One litre of water dissolves the following amounts of the monosaccharate $C_{12}H_{22}O_{11}$, SrO :—

at 0° C.	28·4 grm.	equal to	21·8 grm.	of sugar,
at 58° „	185·1 „	„	142·1 „	„

In practically carrying out this process, a strong solution of strontium hydrate in rather more than the theoretical amount is added to the syrup, the temperature being kept at such a point that there can be no formation of bisaccharate. The mixture, which should remain clear, is then cooled, and a few crystals of monosaccharate are thrown in, when the separation of the same compound commences, and is complete in from twelve to twenty-four hours. The mother-liquor is then separated by a filter-press, supersaturated with strontium hydrate, and the whole brought to the boiling-point, when a formation of bisaccharate at once takes place. This is removed and mixed with a fresh quantity of syrup in the proportion of 1 molecule of total sugar to 1·25 molecules of strontium oxide. The mixture is cooled and a second small crop of monosaccharate obtained as before. From the monosaccharate resulting from these two operations, the sugar may be obtained after precipitating the strontia as carbonate by a current of carbonic acid gas; or better, if a crystal of strontium hydrate is dropped into a saturated solution, the whole being well cooled, a portion of the strontia then separates as hydrate, and the remainder is afterwards precipitated by carbonic acid.

Sucrate of Hydro-carbonate of Lime Process.—This process invented by Boivin and Loiseau, consists in the purification of saccharine solutions by the use of a compound or mixture called "sucrate of hydro-carbonate of lime," which is produced by passing carbonic acid gas into a solution of sucrate of lime, so as to partly, but not entirely, decompose the sucrate. The sucrate of hydro-carbonate of lime is sometimes employed directly in the treatment of cane juice. It is also used in

refining raw sugars of good quality not containing more than 2 to 3 per cent. of glucose. In this latter case the sucrate is mixed with a solution of the raw sugar, and the mixture is boiled and filtered. The lime is then removed as carbonate by passing carbonic acid gas through the filtered liquor. The glucose is destroyed by this process, and it is said without the usual darkening of the liquor which occurs when lime or other alkaline substances are heated with solutions containing glucose. This process is stated to effect a great saving of animal charcoal, whilst the yield of sugar is increased. The residual molasses, however, are only fit for converting into spirit, or to be employed in the manufacture of blacking.

Acetic Acid Process.—By well mixing beet molasses with strong acetic acid, nearly all the impurities may be dissolved out, most of the sugar remaining undissolved. For various reasons, especially the expense of recovering the acetic acid used, this mode of working has not been carried out on the large scale.

Margueritte's Process.—In working this process, sufficient sulphuric acid is mixed with molasses to convert all bases present into sulphates; a considerable quantity of alcohol is then added, and the whole mixture is well stirred, and afterwards allowed to rest, when the bases are almost entirely precipitated as sulphates. The alcohol is recovered by distillation and much of the sugar is left behind, freed to a great extent from its mineral impurities. This process when tried on the large scale was not attended with satisfactory results, there being a considerable loss of alcohol, and also some of the sugar being inverted by the treatment with acid.

Alum Process.—The alum process for removing potash, ammonia, and other impurities from saccharine solutions is the invention of James Duncan, John A. R. Newlands, and Benjamin E. R. Newlands. Beet syrups contain a notably large proportion of potash salts which interfere with the

crystallisation of the sugar. The salts in beet molasses, according to Dr. Wallace, are :—

Chloride of potassium	18·70
Sulphate of potash	4·18
Carbonate of potash	53·80
Carbonate of soda	20·81
Carbonate of lime	0·35
Magnesia	0·27
Moisture and loss	1·89

A sample of French beet molasses gave 10·86 per cent. of ash, 4·88 being potash.

Out of the 3·40 per cent. of ash from English beet syrup, 1·36 is represented by potash.

Low class cane sugars also contain notable proportions of potash :—

Dutch Bastards, 0·33; Guatemala, 0·40; Low Penang, 0·57; Medium Penang, 0·23; Egyptian, 0·63; Jaggery, 0·49; Clayed Manilla, 0·23; Ilo Ilo Manilla, 0·58 per cent.

The alum process consists of two parts: 1st, precipitation, of the potash in the form of alum; and 2nd, neutralisation of the residual acid liquor by means of lime.

1. *Precipitation.*—This is accomplished by adding to the cold syrup solution of sulphate of alumina, in quantity sufficient to form an alum with the whole of the potash present. It is convenient to work with syrup at a density of 38° B., and solution of sulphate of alumina at 27° B., or thereabouts. If the density of the syrup be much over 38° B. the alum cannot easily settle out. The mixture is well stirred for about fifteen minutes to one hour, and the whole is allowed to repose for one or two hours, until the deposit—which consists of small crystals of alum, technically known as "alum meal"—has completely subsided. The tank in which this operation is performed is provided with mechanical stirring gear, and may be called the "alum-tank."

The three principal points to be attended to in this part of the process, in order to obtain the best results and to prevent the formation of uncrystallisable sugar, are—

(1) To work at the lowest attainable temperature;

(2) To employ solutions as dense as possible;

(3) To perform the whole operation as quickly as is consistent with due separation of the alum.

The amount of potash present in syrups is generally equal to $\frac{2}{5}$ths of the ash. The ash is determined in the usual way by addition of concentrated sulphuric acid, followed by incineration and weighing, $\frac{1}{10}$th being deducted from its weight. It is sufficient for most practical purposes to assume that $\frac{2}{5}$ths of the ash is potash.

Every 1 part of potash requires for conversion into alum about $9\frac{1}{2}$ parts of sulphate of alumina, out of which $2\frac{1}{2}$ parts are required to convert the potash into sulphate, and the remaining 7 to combine with the sulphate of potash, so as to form alum. If the liquor contains any sulphuric acid, either free or combined, or, if the solution of sulphate of alumina contains any free sulphuric acid, the $2\frac{1}{2}$ parts of sulphate of alumina required to convert the potash into sulphate may be partly or entirely dispensed with.

For practical purposes it is sufficient to determine the percentage of ash, to assume $\frac{2}{5}$ths of this to be potash, then to multiply the percentage of potash by 9·5, which gives the dry sulphate of alumina, and, lastly, to ascertain the amount of solution corresponding to this.

2. *Neutralisation.*—The alum-tank is provided with several taps, at different heights, and, when the alum has well settled down, the clear acid liquor is run off, by means of these taps, into another tank placed on a lower level, and also provided with mechanical stirring-gear. This tank is called the "liming-tank." As soon as the acid liquor has been thus decanted into the liming-tank, a little finely-divided chalk, previously made into a paste with water, is added, so as to produce a

slight effervescence. Milk of lime is then added at frequent intervals, until the froth has nearly, but not entirely, disappeared: the gradual abatement of the froth serves to indicate when the neutralisation is nearly complete. This operation takes about one hour. The point at which the neutralisation is practically complete may be known by three simple observations :—

(1) The absence of any large amount of froth.

(2) The absence of any taste of aluminous compounds.

(3) The liquor should give only a *dull* red tinge to blue litmus paper.

When the neutralisation is thus practically complete, the treated liquor is subjected to the same routine as the ordinary solutions of sugar in a refinery; that is to say, it is heated in the blow-ups to 65° C. (150° F.), but not to a higher temperature, then passed through Taylor filters, and through char, and boiled down in the vacuum-pan.

To wash and dry the precipitated alum, it is convenient to employ a small centrifugal machine. After once machining for a few minutes, a little water being added as usual during the operation, the alum appears white and dry, but still retains a small amount of syrup. It is then mixed up with some cold water, and machined a second time, after which it will be found free from sugar and fit for sale.

The following analyses show the effect of the process on beet syrup, when treated on a large scale :—

	Beet Syrup	Ditto, after Treatment and before Char.	Ditto, after Treatment and after Char.
Sugar	60·18	40·54	41·60
Ash	3·61	1·33	0·47
Water, etc.	36·21	58·13	57·93
	100·00	100·00	100·00

The advantages of the process are—

(1) The removal of potash and ammonia from syrups without much dilution.

(2) The removal of a great deal of the colouring and albuminous matters.

(3) A considerable improvement both in flavour and odour.

(4) The alum produced is fully equal in value to the sulphate of alumina used, so that the expense of the process is not great.

(5) The plant required is of the simplest description, the cost of labour is small, and the entire process is of a continuous and rapid character.

This process was in constant operation during several years at the sugar refinery of Mr. James Duncan, Clyde Wharf, Victoria Docks, London, where the syrup from many thousands of tons of sugar was treated, several thousand tons of potash alum, of good quality, being, during the same time, produced and sold.

As regards the use of barium hydrate to form barium sucrate, or oxide of lead to form lead sucrate in Wohl and Kollrepp's method, the poisonous character of the reagents would cause any responsible person to hesitate before using them in a material intended for food.

SORGHUM SUGAR

CHAPTER XVIII.

THE saccharine value of the graminaceous plants, known as North China cane, Guinea corn, millet, durra, imphee, sorgo, etc. (chiefly *Sorghum saccharatum*, *S. vulgare*, and *S. caffrorum*), has for ages been recognised in Africa and China; and it would seem that sugar was extracted from maize (*Zea Mays*) by the ancient Mexicans. Attention has been attracted to these plants as sugar producers, principally in the United States, but to a less degree also in Canada, Australasia, India, England and France. It does not appear, however, that they possess any solid advantage over beetroot or sugar cane, and, owing to the character of the organic impurities in the juice, they are more suitable for making syrup than for preparing sugar.

Qualities.—The cultivation of sorghum, maize and pearl millet, and the manufacture of sugar from their stalks, have been made the subject of elaborate and extensive experiments by the Department of Agriculture in the United States.

These investigations appear to demonstrate that there exists little difference between the various kinds of sorghum as sugar-producing plants; and, that each of them is, at a certain period of its development, nearly as rich in sugar as the best sugar-cane. It is a matter, also, of importance, that this maximum content of sugar is maintained for a long period, and affords sufficient time to work up a large crop.

From the results of analysis of the plants in successive stages of development, it has been observed that the amount of uncrystallisable sugar diminishes, and the amount of true cane-sugar increases. It has also been observed that the plants differ widely in the date when the crystallisable sugar is at its maximum, but are alike in that the maximum is attained at about the same degree of development of the plant, viz. at full maturity, as indicated by the hard, dry seed, and the appearance of off-shoots from the upper joints of the stalk. Analyses were made of several sorghums after they had been subjected to a very hard frost, which continued for four days. There appeared no diminution of crystallisable sugar in any of the stalks examined as the result of this continued exposure to a low temperature. An examination was made after a few days of warm weather had followed this cold spell, and the influence of this subsequent thaw was noticeable in the diminution of the crystallisable sugar in each specimen examined.

Varieties.—The United States Department of Agriculture cultivated over thirty varieties of sugar-producing sorghums, all of them valuable to a greater or less degree, according to the varying soil, climate, cultivation, seasons and process of manufacture.

The Early Amber was the favourite variety with planters in Minnesota and the north-west. It receives its name from its early ripening, and from the bright amber colour which characterises its syrup when properly made. The period when it is suitable for cutting extends from August 13 to October 29, inclusive. It is very rich in saccharine matter, yielding 14·6 per cent. of crystallisable sugar. When scientifically treated, its products are destitute of that peculiar "sorghum" taste, formerly complained of; the flavour is very similar to that of pure honey. The syrup readily granulates, and yields sugar equal to the ribbon sugar-cane of Louisiana. A head of this variety is shown in Fig. 160.

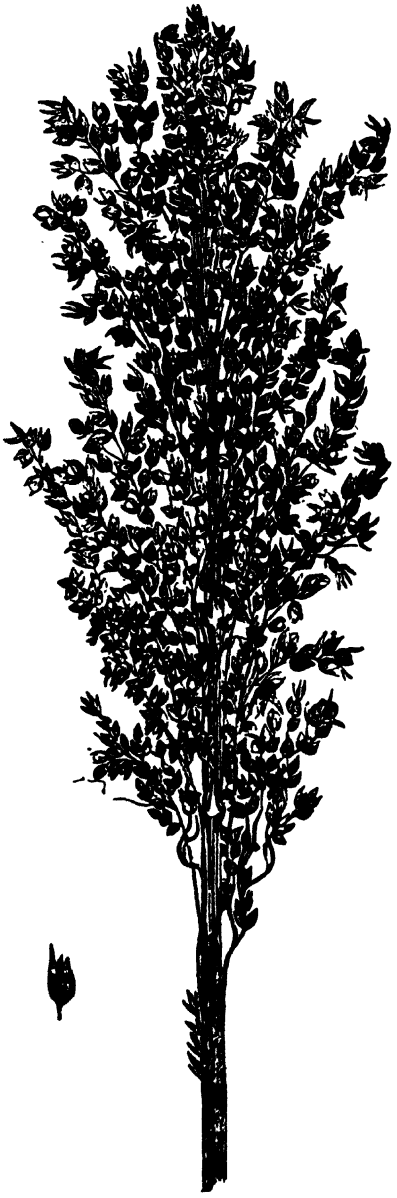

FIG. 160.—EARLY AMBER CANE.

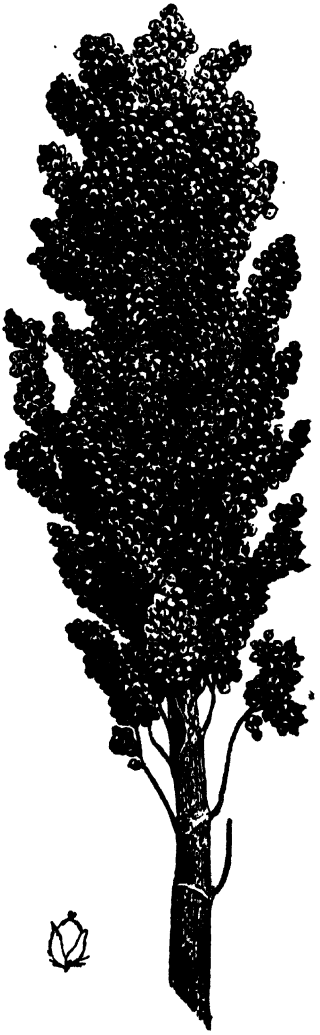

FIG. 161.—CHINESE, OR SUMACH CANE.

The Chinese sorgo cane, grown on the Department grounds, was about the same height as the Early Amber. Its seed-heads are fuller and more compact, and somewhat resemble a

FIG. 162.—WHITE LIBERIAN CANE.

head of sumach; hence the synonym "Sumach cane." It is also known as "Chinese cane." A head of Chinese cane is

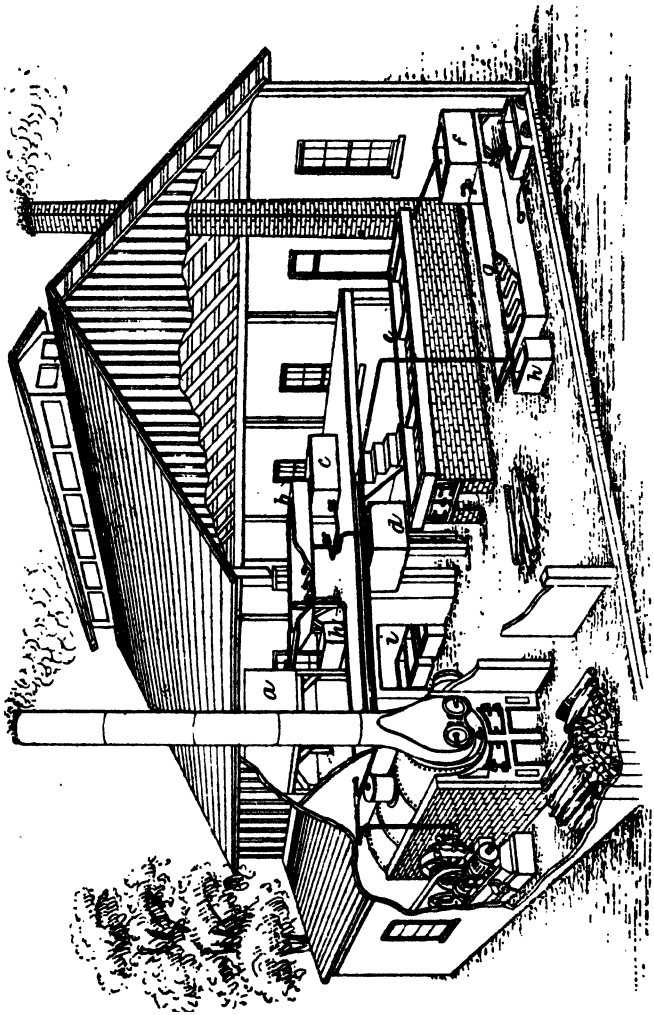

FIG. 164.—COMPLETE FACTORY.

shown in Fig. 161. The time of cutting for this variety is from September 13 to October 29, inclusive, and its sugar content, 13·8 per cent.

The White Liberian cane is rather taller than the Early Amber. The stalk curves at the top, leaving the head pendent; hence the synonym "Gooseneck." The seed-heads are shorter, more compact, and of lighter colour than the Early Amber. A head of this cane is shown in Fig. 162. The period of cutting is August 13 to October 29, inclusive, and the percentage of sugar is 13·8.

The Honduras cane grows about one-half taller than either of the above varieties. Its seed-top is reddish-brown in colour and spreading; hence its synonym, "Sprangle top." It is also called "Mastodon" and "Honey cane." A head of Honduras cane is shown in Fig. 163.

The soil required for the cultivation of the cane is not necessarily rich. Cane planted on ground too poor for wheat has realised 200 gallons per acre of excellent syrup. The seed has a value of its own for consumption on the farm, and is excellent feeding for hogs, sheep and poultry.

Manufacture.—The extraction of the juice from sorghum, and its conversion into sugar, is almost an exact repetition of the operations connected with the manufacture of cane sugar. The machinery and apparatus are identical in principle and purpose, but are usually constructed on a much smaller scale, as well as being often of a portable nature. A short description of a sorghum sugar factory will therefore meet all requirements.

Fig. 164 illustrates the arrangement of a complete sorghum-sugar factory. The juice, after running from the crushing-mill into a tank on a lower level, is pumped up into the juice-tank *a*; *b* is the defecator; *c*, settling-tank; *d*, supply-tank for the evaporator *e*; *f*, supply-tank for the strike-pan *g*; *h*, receptacles for scum; *i*, truck for conveying the syrup to the sugar room. The cost of such a factory is about 2000*l.* for a small size.

STARCH SUGAR AND OTHER GLUCOSES

CHAPTER XIX.

UNDER this section are included the various factitious sugars, syrups, and brewing compounds, obtained by the artificial conversion of starch into sugar, and recovered from the waste liquors and residues produced in the course of sugar refining.

Formation.—From the theories promulgated by different chemists concerning the formation of dextrine, and the transformation of starch into starch sugar and dextrine, the following conclusions may be deduced :—

(1) That starch torrefied in a temperature not exceeding 180° to 200° C. (356° to 392° F.) is largely transformed into dextrine.

(2) If the starch is heated with diluted acids, it changes in the first place into soluble starch, and then into starch sugar and dextrine. The quantity of the sugar forming depends on the concentration of the acids, and increases considerably during the period of its action, while the amount of the dextrine at the same time decreases.

(3) If the starch is heated with a solution of diastase (extract of malt), it will likewise at first change into soluble starch, of which the larger part is first turned into dextrine and the lesser into sugar. The quantity of the starch sugar formed will depend mainly on the temperature under which the

diastase operates. A larger quantity of sugar is formed at a temperature of 60° to 65° C. (140° to 149° F.); but at increased temperatures, say at 65° to 75° C. (149° to 167° F.), larger quantities of dextrine are formed, until finally, by continued increase of temperature, the diastase itself is destroyed.

(4) The sugar formation increases during the action, by the diminution of the dextrine, especially when the sugar formed is caused to ferment by yeast, and is thereby removed. The quantity of the formed sugar but little exceeds that of the dextrine, even in the most favourable cases.

Principles of Manufacture.—Starch sugar finds no application which common crystallisable sugar could not fulfil, and it must always be considered as merely a substitute. Hence, the manufacture of starch sugar is only advantageous when it can be produced more cheaply than cane or beet sugar. When it is known that the article appearing in commerce as starch sugar is very often far from being pure grape sugar, and contains upwards of 50 per cent. of water and unfermentable substances, it will be seen that starch sugar is used more than is profitable.

The transformation of starch into sugar by means of sulphuric acid and diastase has already been explained. The relative quantity of sulphuric acid used is of importance, as the time needed for conversion is dependent upon it. The transformation occurs, for instance, much more rapidly when 2 than when 1 per cent. of sulphuric acid is added. Boiling under increased pressure also reduces the time of the operation. The sulphuric acid remains unchanged by the process; but a full explanation of its action has not been given. It can be removed from the liquid by carbonate of lime.

According to calculation, every 220 lb. of dry starch should furnish 238 lb. of dry sugar, corresponding to 264 lb. of crystalline starch sugar, if the transformation were perfect. But complete transformation can never occur in practice. Perfect transformation could only occur after the lapse of 36

hours, or even longer, when, by the simultaneous action of the sulphuric acid upon the sugar that had been formed many hours previously, large quantities of other products must accumulate in the solution. The products of decomposition thus formed would be of greater injury for all possible uses of starch sugar than the small quantities of dextrine which might otherwise be retained in the finished article. Too long boiling of the starch with sulphuric acid produces an entirely useless article.

The transformation of starch into starch gum and starch sugar by diastase (malt) occurs most rapidly and completely at the so-called mash temperature of 60° to 65° C. (140° to 149° F.). The formation of soluble starch in this case takes place during a very short period. Starch gum and sugar ensue simultaneously, and the starch gum itself cannot be completely transformed into sugar, even by continual action of the diastase; if, to the solution thus obtained, about 1 per cent. of sulphuric acid is added, and then boiled, an approximately complete transformation of the starch gum into sugar will take place, especially if the boiling is done under pressure.

These general remarks suggest the following rules for practice: Pure crystalline starch sugar can only be produced by means of sulphuric acid, and only by long-continued boiling. A shorter boiling of the starch in sulphuric acid water produces a glucose which contains considerable quantities of an intermediate product between gum and sugar. The sugar thus obtained is not hard and crystalline, but soft and tough, and becomes moist in the air. From a syrup thus produced, no solid sugar separates, because the starch gum prevents the separation. With a syrup obtained by too long boiling, there ensues a separation of starch sugar in a grainy condition. This is considered as spoiled glucose. Syrup prepared by means of malt alone contains a considerable amount of starch gum. By the application of sulphuric acid, after the use of

malt, the gum can be transformed in a great measure into sugar. Starch sugar can be made directly from potatoes, grain, rice, maize, moss, wood, fruits, honey, etc. In the manufacturing industries, it is only made of starch. In the United States, corn starch is with but few exceptions employed ; in Europe, potato starch.

Starch sugar appears in commerce in five different forms, (1) starch-syrup ; (2) a sticky mass, termed "imponderable syrup" or "glucose" ; (3) granulated sugar ; (4) common solid sugar ; (5) refined solid starch sugar, distinguished by its whiteness and sweet flavour, which are secured by refining.

Manufacture.—The manufacture of starch syrup and starch sugar by means of sulphuric acid is divided into the following operations : (1) Boiling the starch in sulphuric acid water ; (2) removal of the sulphuric acid and the sulphate of lime produced from the solution ; (3) evaporating and refining the sugar solution.

These are performed in various ways.

Boiling.—The boiling of the starch in water containing sulphuric acid is best performed in a wooden vessel by direct admission of steam, with, however, the disadvantage of introducing much water. Lining the vessel with lead is not necessary, but increases its durability. Formerly the boiling vats were constructed in such a manner that they could be heated under pressure ; but they offered very little security, and their bottoms were often blown out. Such vats exist even yet in some old establishments, but are not used in manufactories of recent construction. Their only advantage was that the boiling was shortened ; but the starch became somewhat thin and liquid, because the steam entering the mass became condensed, diluting it to 14° or 15° B.

The modern stirring-tub (Fig. 165) has a spiral copper worm, through which steam circulates. By this means, the mass is brought to a boil without being diluted, so as to show 19° to 20° B. when done. There is thus a great saving of fuel.

The staves for the vat are of good pine, 2½ inches thick. A vat to boil twice a day 3300 lb. of green starch, should be 8½ feet high. Its diameter below is 5¾ feet, and above 5½ feet; it is open above, with a cover to be laid on, and a chimney. The chimney is square, and made of ¾-inch pine boards, 10½ inches wide in the clear, and of a height to project above the roof, to carry off the odours. The vat is placed upon a strong framework, so that the boiled starch can run into the neutralising-coops by means of spigots above the bottom. The copper worm has a diameter of ½ inch, so that it may be inserted in the vat without trouble. The rings are fastened with brass clamps. Nothing is made of iron; all screws and nuts must be of copper or brass. The condensed steam escapes at the side through a pipe connected with the copper worm and carried to the steam boiler.

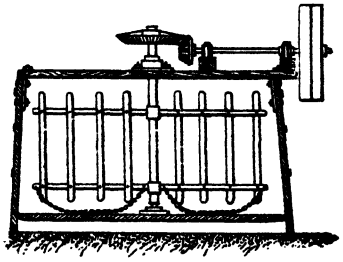

FIG. 165.—STIRRING TUB.

The requisite quantity of water is placed in the vat, and heated to a boil, when the previously diluted sulphuric acid has been added. The starch mixed with lukewarm water to a milky consistency, is gradually run into the vat from the stirring-tub, while the liquid in the boiling-tub is kept at a constant boil. As the starch deposits itself quickly from the starch-milk, it must be constantly stirred. The larger the quantity of the boiling liquid, the less readily it will cease boiling, and the less a paste formation will ensue. If no stirring-vat for the starch-milk is placed over the boiling apparatus, the starch-milk must be poured into the boiling sour water in portions. For each 220 lb. of air-dry starch. about 40 to 55 gallons of water, and generally 4½ lb. of sulphuric acid are used, when syrup is to be produced; for the manufacture of solid sugar, the acid may be increased to 8¾ lb.

The water stated includes that used for stirring the starch. The quantity must at any rate be such that the worm in the converter is covered. As the starch used in glucose factories is generally prepared there, and as the green starch can be well preserved in vats and barrels, it is generally applied in a moist condition ; hence, instead of using 440 lb. of dry starch, 660 lb. of green starch are taken, and the water contained in the green starch is allowed for.

When the entire quantity of starch-milk is in, the boiling is continued until the transformation is accomplished. If syrup is to be produced, the boiling is of shorter duration than for solid sugar. During the boiling, especially with potato starch, a very disagreeable, penetrating odour is developed.

At short intervals, the liquid is tested, first with a solution of iodine, and afterwards with alcohol. For the iodine test, a few drops of the sugar liquid are placed in a test-tube, diluted with cold water, and treated with a few drops of the iodine solution. When the liquid is no longer coloured violet or reddish, the transformation into gum and sugar is finished. The alcohol test now begins. To a little of the liquid in a test-tube an equal or double volume of strong alcohol is added. The stronger the white separation caused thereby, the larger is the quantity of dextrine still present. Even when the precipitation ceases, some dextrine is still unchanged into sugar ; a ready means for determining its complete transformation into sugar is not yet known.

Neutralisation and Filtration.—When the transformation is sufficiently attained, the sulphuric acid is removed by the application of carbonate of lime. The acid decomposes the lime, carbonic acid gas escapes, and insoluble sulphate of lime is produced ; the liquid loses its acid reaction, and becomes neutral. This operation can be conducted in the boiling apparatus, but in most cases, is performed in neutralising vats. Such are flat vessels, whose height stands to their width in a

proportion of 1 to 3. The most suitable form of carbonate of lime is chalk, but limestone free from clay can be applied. It is indispensable to grind them into fine powder. A handful of this powder is thrown at a time into the hot acid liquid, constantly stirred and mixed till no further ebullition ensues. Some manufacturers apply the chalk in bags, whereby the settling and refining are simplified. Each 1 lb. of sulphuric acid contained in the liquid requires 1 lb. of pure carbonate of lime; of chalk or limestone, more must be taken, as they are not pure carbonate of lime. An excess should be avoided, so as not to unnecessarily increase the sediment.

As soon as litmus paper shows a perceptible decrease of acid, the liquid is boiled for a short period before more carbonate is added. The cessation of effervescence is the best index of neutralisation. The final additions should be of chalk-milk—powdered chalk stirred in water to a milk, and used after the coarser parts have settled. Slaked lime is inadmissible, because it destroys the starch sugar.

Neutralisation being complete, the muddy contents of the boiling-tub are run into a wooden depositing-tank of greater height than width, supplied with spigots for drawing off the liquid. In large establishments, adjacent to the boiling apparatus, a reservoir is placed in the ground and lined with brickwork. Into this, the contents of the boiling apparatus are drawn, and afterwards pumped into the depositing-vat. After the lapse of 12 to 24 hours, the sulphate of lime is deposited, so that the saccharine liquid may be drawn off. The sediment still contains a considerable amount of saccharine liquor. For the recovery of this residue, various methods have been applied.

Filtering-barrels consist of vertically placed barrels with sieve bottoms. Above the sieve bottom, a piece of coarse cloth is spread, covered with cut straw or coarse river sand, for the reception of the residue. The liquid runs out by the stop-cock in the lower bottom, pure and clear. The first

portion is returned to the filter. Upon the residue, gypsum water is carefully poured, after the upper layer has been made even, and is somewhat loosened. The absorbed sugar liquor is thereby dislodged; or the residue is strained through bags or cloths, the press cakes being again saturated with water and the pressing repeated.

The most general practice is to use bag-filters (described on p. 586), or filter-presses (described on pp. 483–486).

Evaporation and Refining.—The evaporation of the clear sugar liquor is accomplished either over a direct fire or by steam. In the first case, flat pans are used, whose bottoms are only touched by the fire; in the other case, various vacuum-pans. The evaporating cannot be conducted uninterruptedly, since the solution yet contains dissolved gypsum, which begins to separate during the evaporation, by letting the liquid stand. The evaporating, therefore, is divided into two periods: (1) to a thin syrupy consistency, and (2) to a dense syrup after the removal of the gypsum. It does no harm to add sugar liquor to the pan in the same ratio as the contents diminish by evaporation. The scum produced during the process is taken off with a skimmer.

As soon as the separation of gypsum makes it necessary, or when the liquor has reached a concentration of 20° to 30° B., it is transferred into upright barrels, provided with spigots, for depositing and separating the gypsum. When finer cloths are put into a filter-press, the latter may also be used for removing the separated gypsum. When this is accomplished, after the lapse of several days, the clear liquor is drawn off and evaporated in the same pans, or in extra pans, to a dense syrupy consistency (40° to 45° B.). In large factories, vacuum-pans are used for this purpose. The deposits of gypsum from the barrels are placed in bag-filters, and then pressed.

Evaporation in open pans does not allow of utilisation of the steam or fuel; besides this, the liquor, while exposed to too high a temperature, receives a dark colour, and, at the

finish of the boiling, a strong formation of scum will ensue. Hence closed evaporating apparatus has for some time been used. Many forms of steam- and vacuum-pans have been described in foregoing chapters (see pp. 249–300).

As a brown colour is desired for glucose-syrup, if it is intended to substitute for or mix with cane-sugar syrups, decolorisation by means of bone-black (animal charcoal) is not always demanded. If the syrup is not to be decolorised, it is boiled down in the vacuum-pan to 40° or 42° B. at 60° to 65° C. (140° to 149° F.), and again forced through the filter-press. For this operation the first filter-press may be used after cleaning; but it is better to set up a second press of smaller dimensions, with lighter cloth. The syrup, while passing through the filter-press, must be kept at a temperature of 75° C. (167° F.).

The saccharine liquor is passed through filters of coarsely powdered animal charcoal (as is done in beet- and cane-sugar manufactories), or refined with fine charcoal and blood, to produce an absolutely decolorised syrup, and to improve its flavour.

The filtering through bone-black is best accomplished at 32° B. at 60° to 65° C. (140° to 149° F.). This is done after the gypsum has deposited itself by prolonged rest, the liquor being previously re-heated. If starch syrup is long kept at a temperature near its boiling-point, it assumes a darker colour and becomes sweeter.

On the manufacture of solid starch sugar, little needs to be added to the preceding remarks. Whether the syrup remains liquid, or in time congeals into solid, grainy sugar, depends less on its concentration than on its quality. If a quantity of dextrine is still present, the syrup will remain liquid even at 45° B. If the starch has been very completely transformed into sugar, the resulting syrup will, by good concentration, gradually congeal entirely to a grainy sugar. Such syrup is permitted to stand in moderately warm rooms,

in wooden or earthen vessels, until it congeals. For producing a solid, white sugar, the treatment with bone-black for the purpose of decolorising is indispensable.

Liquid syrup is generally packed in strong casks or tuns of soft wood, and is liable to excessive shrinkage. During hot weather, its transportation is almost impossible, since the syrup absorbs the water contained in the wood, the casks become dry, and the syrup leaks out. In case the boiling process has not been properly attended to, the product will easily ferment and spoil. Hence the article appears in commerce principally in a solid form. If the concentrated syrup, after cooling off, is stirred or beaten, it will coagulate in 8 to 10 hours so perfectly as to assume a soaplike consistency, without altering its quality. In this condition it can be far better preserved and more easily transported. But liquid glucose which coagulates very quickly is not adapted to form an article of the syrup trade.

The principal grades of starch syrup and starch sugar are:—

Starch syrup or glucose, an article which remains clear and liquid for a comparatively long time; common starch sugar, obtained by coagulation of starch syrup, and characterised by containing a relatively large amount of dextrine; purified or refined starch sugar, obtained by repeated refining of the common sugar; granulated starch sugar, obtained by coagulation, but containing the smallest possible percentage of dextrine.

When the product is to be disposed of as solid sugar, and not as syrup, the liquor is evaporated in flat vessels, to 40° to 42° B., and then placed in crystallising-pans. After the crystallisation has commenced, the sticky liquid is filled into small barrels where the mass in a short time entirely coagulates, and can be shipped. It may also be allowed to become solid in the pans, and then be ground and packed. Some manufacturers produce a dry and grainy sugar; it is then of importance that the transformation of the starch into sugar is

as complete as possible, since the presence of great quantities of remaining dextrine will hinder granulation.

Common starch sugar is identical with liquid starch syrup; but in general, the composition is so varied that scarcely two samples are exactly alike, as may be seen from the subjoined analyses:—

—	Starch Syrup		Common Starch Sugar		
	I.	II.	III.	IV.	V.
Water	21·8	20·8	27·8	27·4	26·0
Sugar	42·2	56·0	56·2	58·8	61·5
Dextrine and intermediate products ..	35·4	22·6	15·6	13·3	12·0
Mineral ingredients	0·6	0·6	0·4	0·5	0·5
	100·0	100·0	100·0	100·0	100·0

Johnson's Method.—A process by which large quantities of glucose are made is that patented by S. H. Johnson, of Stratford, which deals with "permeable" grain.

This term "permeable" grain is understood to include grain whole, crushed, bruised or broken, or granular amylaceous substances, being of such form and combined with only so small a proportion of water or liquid, that steam can permeate every part of a layer or bed of it with facility, it being an essential feature in this process that complete permeation of the steam should be effected; whole grain is generally preferred, but in some cases it may be more convenient or cheaper to employ broken grain. The grain, however, must not be in the form of flour, as it would then form a paste more or less gelatinous, and so prevent complete permeation by the steam.

Rice or other grain containing starch may be employed, provided it be kept in a permeable condition, so as to allow steam to penetrate and act upon it, until the starchy portion of all the grain becomes converted into dextrine. In previous processes the grain operated upon has been treated with so

much water as to allow of the starch to become so gelatinous and expand so much as to form a paste more or less impermeable to steam. This inconvenience is avoided by proceeding as follows: The grain is first macerated in a wooden vat with as much diluted hydrochloric acid, containing about 2 per cent. of real acid, as is necessary to cover the grain completely with the liquid. When the grain has absorbed as much as possible of the dilute acid, the liquid which remains unabsorbed is drawn off from a hole in the bottom of the vat.

The dilute acid which has been drawn off from the grain will be found to have increased considerably in specific gravity, due to the protein and albuminoid compounds which have become dissolved in it from the grain. It will have also acquired an aromatic odour, due to the essential oils removed from the grain by this treatment.

In order the more completely to remove the nitrogenous principles and the essential oils which still remain in the grain, it is macerated with clean water in such a manner that when the grain has become covered with the water the liquid is allowed to flow off at the bottom of the vat through an aperture provided with a filtering diaphragm. The water is supplied at the top at the same rate as the liquid percolates through the grain. This percolation is continued until the liquid running away from the grain no longer gives an acid reaction to litmus paper. When this neutral condition is attained, the grain is allowed to drain, and it is afterwards again macerated for a few hours in dilute hydrochloric acid containing 1 or 2 per cent. of real acid. This maceration is continued until the acid dialyses through the tissues of the grain to such an extent that it will contain enough acid to effect its conversion into glucose when subsequently treated.

The proportion of acid varies according to the nature of the grain, the temperature at which the conversion is effected, and the amount of water present at the time of the conversion. Rice, for example, ordinarily requires about

$\frac{1}{400}$th part of its weight, when dry, of real hydrochloric acid to be present in the grain to effect the conversion under the circumstances and conditions of temperature and moisture that would obtain; but the amount of acid necessary for conversion varies with different grains, and with different samples of the same species of grain. It is therefore necessary when treating a particular lot of grain to ascertain by experiment the least proportion of acid which, under all circumstances, it would be most desirable to employ, and so that during the process of conversion the grain shall not be exposed to the high temperature necessary for such a length of time as would materially affect the colour of the resulting product.

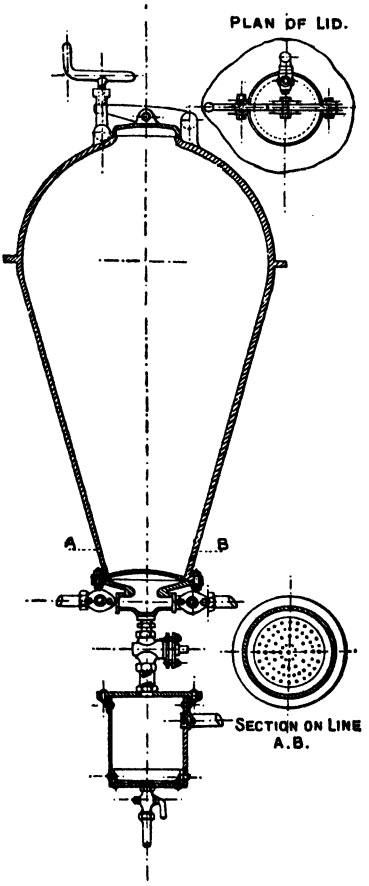

FIG. 166.—STEAM CONVERTER.

The grain, when prepared as above described, and well drained, is introduced into a strong wrought-iron vessel lined with lead or with a silicate enamel capable of resisting the action of the acid as represented in Fig. 166. The vessel should be of such a shape that when steam is introduced through a perforated diaphragm at the bottom, it shall be able to pass with facility through every part of the material contained in the vessel. For this purpose, the lower portion of the vessel has the

shape of an inverted truncated cone, the whole area of the small truncated portion being covered internally by a perforated diaphragm for the admission of steam. This vessel is further provided with a suitable opening at the top for the introduction of the prepared grain, which opening is capable of being hermetically closed. It is also provided with a steam-pressure gauge and a draw-off cock and sampling cock, connected beneath the perforated diaphragm before mentioned. There is also at the bottom a trap or small box to receive and retain any water which may be brought over by the steam. When the vessel is formed of wrought or cast iron lined with lead, it becomes necessary to perforate the iron at intervals with small holes so as to prevent the accumulation of steam in case any moisture or dampness existed between the shell and the lead lining. Such accumulation of steam would inevitably occur in the absence of the precaution indicated, and when the contents of the vessel were removed, thus withdrawing the internal pressure, the leaden lining would collapse.

When the prepared grain is introduced into the vessel it still retains its form, and the mass is consequently quite porous, so that the steam introduced beneath the perforated diaphragm at the bottom of the vessel immediately permeates every portion of the material under operation; and, owing to the form of the vessel and the porous condition of the grain the temperature of the mass is speedily raised without the aid of a mechanical agitator to the point at which the conversion into glucose takes place, the requisite degree of temperature being reached before a sufficient quantity of water has been formed by the condensation of the steam to destroy the porous nature of the grain under operation. When this point is attained, the contents of the vessel become liquid, and are put into a state of violent agitation by the ingoing current of steam. The pressure under which such steam is introduced should not be less than 50 lb. nor more than 100 lb. to the

square inch ; although lower pressures can be employed, yet it is not at all advantageous to use them. The pressure is varied between these limits according to the nature of the grain employed, or the required character of the resulting product. For example, if it be desired that the product should retain a certain amount of dextrine, then a lower pressure would be employed than that which would be necessary for the complete conversion of the grain into glucose.

The mass may be sampled during the process by means of the sample cock, and after dilution and cooling the samples may be tested for the presence of starch and dextrine by means of an aqueous solution of iodine. When the conversion is completed, which for rice requires from 5 to 15 minutes (provided the steam has been injected with sufficient rapidity), the contents of the vessel are forced out through the draw-off cock into large shallow coolers provided with suitable agitators, or into other suitable apparatus for reducing the temperature with rapidity. In these coolers the material is neutralised with an alkali or alkaline earth, or their carbonates in the usual way. If the product is required for the purpose of brewing or distilling, then the presence of the extraneous tissue, etc., is of little consequence. In such case, the syrup may be at once boiled down in a vacuum-pan to the degree of concentration necessary for its solidification. It is found that glucose so obtained is free from the unpleasant bitter taste of fusel oil, which is eliminated by the hydrochloric acid treatment in the first stage of the process.

Hitherto in order to remove this taste it has been found necessary to filter the glucose through animal charcoal, but such filtration for this purpose is rendered unnecessary by this process. The syrup is also produced in such a degree of concentration as has hitherto been found impracticable.

When it is required to separate the glucose from the insoluble matter accompanying it, it will be necessary to dilute

the syrup after neutralisation, and filter it by any convenient method, whether under pressure or otherwise.

If it be desired to produce glucose free from colour, it will be necessary to filter it through animal charcoal; but it will be found that after the treatment described a much smaller proportion of animal charcoal will be required than has hitherto been the case.

For the purpose of removing the fusel oil and nitrogenous substances, some other acids may be emyloyed in lieu of hydrochloric acid, such as nitric and sulphuric acids; but hydrochloric acid answers the purpose best. The hydrochloric acid may be employed in the gaseous state, and may also be replaced by nitric and sulphuric acids for the purpose of conversion; but a solution of hydrochloric acid is the most powerful and convenient, and effects the conversion with the smallest amount of coloration. Where hydrochloric acid is used, the quantity necessary is so small that the common salt produced by neutralisation with carbonate of soda remaining in the glucose is of no material consequence.

Before macerating the grain with dilute hydrochloric acid for the purpose of removing impurities, that treatment is sometimes preceded by maceration in a solution of caustic soda or other alkali for the purpose of more perfectly removing the nitrogenous portion of the grain. The alkali solution should contain ½ to 1 per cent. or more of alkali, according to the amount of nitrogenous substances in the grain.

After macerating a sufficient time (say 5 or 6 hours), the alkaline solution, which has dissolved in it a considerable portion of the gluten of the grain, is removed, and the alkali is washed out in the same manner as described in reference to the acid treatment.

When it is desired to produce glucose or dextrine at the cheapest possible rate for brewing or distilling purposes, or where it is desired to use amylaceous matters, such as sago,

tapioca, etc., which have already undergone purification processes for the purpose of freeing the starch from albuminous matter, the purification processes preceding the conversion may be omitted and the following plan may be adopted, viz.: Treat the grain in a revolving or other suitable vessel which procures the proper mixing of the grain with about 4 per cent. of its weight of dilute hydrochloric acid of specific gravity about 1·060, until the acid is absorbed by the grain. After the acid has been allowed to remain in contact with the grain for the time necessary for the disintegration of the tissues, the mass may then be treated in the converter in the manner hereinbefore described, when it will be found that after expulsion from the converter, neutralising and cooling, the mass will become solid, or nearly so, provided the grain employed for the purpose did not contain an undue amount of water. In such latter case, the excess of water above what is necessary for the conversion should be expelled by heat from the grain before it is employed for the purpose by means of a kiln or other convenient apparatus.

In order to reduce the quantity of water to the smallest possible proportion, it is desirable that the neutralisation of the acid should be effected with dry reagents. For this purpose, in the case of the employment of hydrochloric acid, dry carbonate of soda is good, but when using sulphuric acid, dry carbonate of lime.

When it is desired (for distilling purposes, for instance) that the product shall consist almost entirely of glucose, the conversion is similarly effected, but before removing the material from the converter, a quantity of water or very dilute acid (which by experiment is found to be sufficient for the grain employed), and which has been previously heated under pressure to the temperature of the contents of the converting vessel, is introduced, and maintained at this temperature until the desired result is obtained, which is determined by trial during the progress of the operation. The proportion or

description of acid must be varied according to the nature of the grain operated upon, the most convenient proportion having been previously determined by experiment.

Jebb's Method.—The process invented by W. T. Jebb, of Buffalo, comprises the manufacture of starch from maize and other grain, the treatment of starch for the production of solid grape-sugar and liquid glucose, the subsequent treatment of the grape-sugar for preparing it for consumption, and the treatment of the refuse for use as food for animals. Plate X. is a sectional elevation of a factory containing the necessary train of apparatus.

The grain is introduced from a receiving bin or other suitable receptacle or conduit into a steeping tank or vat A of any suitable and well-known construction, in which the grain is thoroughly steeped or soaked, preferably in warm water, care being taken not to boil the grain.

The steeping tank used by Jebb consists essentially of a closed tank or tub having in its top a central feed opening, which is opened and closed by a suitable valve. In the upper portion of the tub, under the feed opening, is arranged a spreading device, which distributes the grain in a spray over the entire circumference of the tub. The latter is provided with a conical bottom which terminates in one or more discharge spouts *a*, provided with suitable gates or valves. The tub is provided in its lower portion with an annular chamber having a perforated top, through which the steeping water is admitted to the tub, the water-supply pipe communicating with the chamber. The tub is also provided with a waste pipe, through which the water can be drained from the grain, and with a vapour-escape pipe, leading from the upper portion of the tub out of doors, to conduct the vapour out of the building.

The steeping tub is first filled with water having preferably a temperature of about 140° F. The grain is then introduced into the tub, the spreader operating to distribute the grain, so

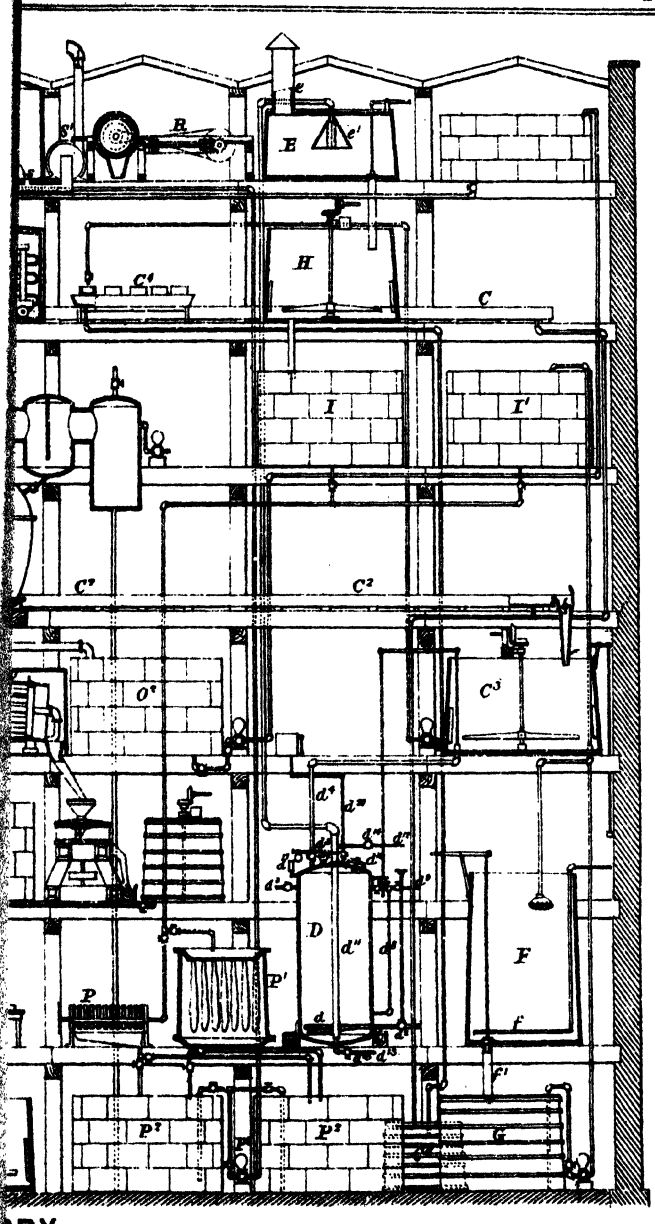

ORY.

that the kernels reach the water singly or nearly so. In descending through the water the kernels are washed and freed from the foreign matter, such as dirt, chaff, and the like, which latter float on the surface of the water and pass off through an overflow pipe with which the tub is provided. The temperature of the water is lowered by the introduction of the grain, and is preferably maintained at about 120° F. by renewing the water from time to time.

Maize or other grain is steeped in this manner for from 15 to 20 hours, or until the proper degree of softness is obtained.

When the steeping is completed, the water is drained off, and after the water has been removed, the grain is discharged from the steeping tub through the discharge spout *a*. By this method of steeping, the removal of the foreign matter and the steeping of the grain are accomplished simultaneously, the overheating or boiling of the grain is prevented, and the operation is effected expeditiously and with very little labour.

The steeped grain passes from the discharge spout *a* to grinding, disintegrating, or crushing mills A^1, by which the grain is ground or crushed and mixed with water. When two or more mills are employed, as represented, the grain may be discharged from the spouts *a* into a conveyor trough a^1, which conducts the grain to the several mills. Jebb prefers to employ for the reduction of the steeped grain a pair of millstones, between which the grain is delivered together with a stream of water which enters the eye of the running stone together with the grain. The quantity of water admitted to the mill is preferably so regulated that the material discharged from the mill has a gravity of about 10° B.

The ground grain passes from the mill into agitating vats A^2, which are provided with agitators by which the material is kept in motion. From these agitating vats the material is pumped to other agitating vats A^3.

The material passes next to a separating machine B,

whereby the starch water, that is to say, the water holding the particles of starch in suspension, is separated from the bran and other coarse offal.

This separating machine consists essentially of a shaking-sieve *b* covered with bolting-cloth of the requisite degree of fineness, and provided with perforated pipes, whereby sprays of water are delivered upon the bolting surface, so that the material in passing over the bolting surface, is separated in such manner that the water containing the starch is passed through the meshes of the sieve into a receiving hopper or receptacle b^2 below, while the bran and other coarse offal pass the tail of the sieve into a different receptacle b^3.

The separated starch liquid passes from the separating machine B into settling vats B^1, which are provided with revolving rakes vertically adjustable. The starch liquid is permitted to come to a state of rest in these settling vats, whereby the starch subsides. The supernatant water is then drawn off from above the subsided starch, the settling vats being provided with several draw-off cocks arranged at different heights, so that the water can be drawn off to any desired depth. The water so drawn off may be fed to the mills or sieves, or it may be utilised in the manufacture in any other manner.

After the water has been so drawn off, a solution of alkali is introduced into these settling vats. Jebb employs for this purpose caustic soda in about the proportion of 1 lb. caustic soda to the product derived from 2 bushels of maize. In warm weather the quantity of alkali should be increased, and in cold weather it may be somewhat less. Water is then added in sufficient quantity to work the mixture conveniently, and the quantity of water is so regulated that the gravity of the mixture will be about 10° B. The mixture is now thoroughly agitated so as to incorporate the alkali with the contents of the vats, the alkali operating to render the gluten soluble. The contents of the settling vats are pumped to

agitating vats B^2, in which the gravity of the mixture is further reduced, by the addition of water, to the density required for separating the starch from the gluten on starch runs or tables. Jebb adds water for this purpose in such quantity as to reduce the gravity of the liquid to about 3° B. The agitating and settling vats are employed in such numbers that the product coming from the mills and sifting machines can be delivered successively into the several tanks, which latter are successively emptied, so that there are always empty tanks to receive the product, permitting the manufacture to be carried on continuously.

The material passes from the agitating vats B^2 upon slightly inclined starch tables C, upon which the starch is deposited, while the gluten and other light or soluble refuse escape over the ends of the tables. The material escaping over the tables is preferably discharged into a vat in which the heavier valuable portion of the material settles, while the refuse passes off through an overflow pipe into a cistern C^6, from which it is removed to be used as food for cattle.

These starch tables consist essentially of long gutters or troughs, which are slightly inclined in the direction of their length and level in the direction of their width, and upon which the liquid containing the starch is delivered at their heads and caused to flow in a thin stream, from which the starch is deposited in a state of comparative security.

The starch which has been deposited on the tables is placed in a mixing tub C^1, which is provided with a revolving rake, and in which the starch is mixed with water, so as to produce a liquid of about the same gravity which it had when delivered upon the tables C. The liquid is delivered from the agitating tub C^1 upon another set of starch tables C^2, similar in construction, and upon which the starch is again deposited out of the liquid, while the light refuse which may be contained in the liquid runs off, and is collected as above described.

The operation of mixing with water and depositing upon

starch tables may be repeated a third time, if deemed necessary.

If it is desired to manufacture the various kinds of commercial starch, such for instance as the various grades of laundry starch and culinary starch, the starch is mixed in a tub C^3 with water to a creamy consistency, and is then pumped to boxes C^4, in which the water is permitted to drain off. These boxes are constructed of wood, open at the top and preferably about 7 inches in transverse section and several feet long, and are provided with perforations in their bottoms and sides, through which the water escapes. A lining of cloth is placed in them. The boxes are filled with starch liquid one after another, and placed to drain.

The water escaping from the boxes is conducted to the same receptacle which receives the water from the starch tables. After the starch has become sufficiently hard in these boxes to permit of its being handled, it is taken out of the boxes and placed upon a table, upon which it is cut or broken into blocks having approximately the form of cubes.

The starch is now ready for the dry kiln, which latter consists of a closed chamber C^5 having its walls and doors constructed so as to exclude the exterior air as much as possible from the interior of the kiln, the walls and doors being preferably made hollow and packed with sawdust or some other non-conducting material.

The kiln is heated preferably by means of steam coils to a temperature of from 120° to 160° F., and is provided with racks, on which the starch to be dried is placed.

The rack is supported upon a carriage, running on a track, so that it can be filled with the wet starch outside the kiln. The wet starch is permitted to remain in the kiln for a period of two days, or till comparatively hard and dry.

During this preliminary drying operation, a hard yellow crust forms on the blocks of starch, which crust is now removed by cutting or scraping. The blocks of starch are then

wrapped in blue paper, or they are put in wooden boxes each of a size to receive one block, and open at the top, or they are broken up into lumps and covered with a thin layer of an inferior quality of starch to exclude the air.

The starch so prepared is now again placed in the drying kiln, and remains there until the operation of drying is completed. The drying operation is carried on slowly and under exclusion of the exterior air, whereby the cracking of the wet starch is prevented.

After the drying operation is completed, the starch is removed from the kiln and either packed into boxes in the condition in which it comes from the kiln, or it is ground or otherwise treated according to the use for which it is intended and the demands of the trade.

When the starch is to be manufactured into grape-sugar or glucose, it is treated in the following manner: When it is desired to convert the starch under pressure for the manufacture of solid grape-sugar, the starch is reduced by an addition of water in the tub C^3 to a gravity of about 12° B.

The closed converter D used in connection with this process is constructed as follows:—

The shell or body of the converter is constructed of cylindrical form, with convex ends or heads, steam-tight, of copper or of iron lined with lead, and of sufficient thickness to withstand the internal pressure to which it is subjected in use. Within the converter and near its bottom a perforated steam-coil d is arranged for injecting steam. Steam is admitted to the coil through a pipe d^1 provided with a suitable valve d^2. The converter may have a diameter of 5 feet and a height of 10 feet. As it is most convenient for the operator to be standing near the top of the converter the latter passes through the floor or platform upon which the operator stands, and the valve d^2 is provided with a long handle extending upwards, and terminating within convenient reach of the operator.

In order that the steam may be permitted to escape from the converter, when it is desired that the temperature of the contents should not exceed the boiling point at the atmospheric pressure, the top of the converter is provided with a steam outlet pipe d^3. The upper end of the converter is provided with a pipe d^4, whereby the starch liquid or the diluted acid, or both, are conducted into the converter, and which is fitted with a suitable valve d^5. In order that the contents of the converter may be readily tested, two test cocks d^6 d^7 are provided. The cock d^6 communicates directly with the converter by being screwed into its cylindrical body. The cock d^7 is used for the purpose of testing the contents of the lower portion of the converter, and for this purpose it is connected with the pipe d^8, which is arranged on one side of the converter, and connected with the lower end thereof. In order that this pipe may be readily cleansed, it is provided with a steam pipe d^9, having a suitable valve d^{10}, and connecting with the upper end of the test pipe d^8, so that steam may be at any time blown through the test pipe for the purpose of removing its contents and cleansing it, thus enabling a correct sample of the contents of the lower end of the converter to be drawn by closing the steam valve d^{10} and opening the test cock d^7. This improved system for cleansing the test pipe is applicable to open converters as well as to closed converters.

In order that the contents of the closed converter may be discharged free from such heavy solid articles as may be accidentally introduced with the starch liquor, the blow-off pipe d^{11} is provided. This pipe extends centrally through the converter, and has its open lower end a short distance from the bottom. Consequently all the contents of the converter as low down as the lower end of the blow-off pipe, can be readily blown through it, while heavy solid articles, such as nails or pieces of iron, which are sometimes accidentally mixed with the starch, are left deposited in the bottom of the converter, and do not lodge in the blow-off valve. In order that

this blow-off pipe may be readily cleansed, two steam pipes d^{12} d^{13} are provided. One of these cleansing steam pipes d^{12} is connected with the blow-off pipe above the upper end of the converter, so that by the introduction of steam, when the blow-off pipe is closed, whatever starch liquor there may be in the blow-off pipe is blown downwards, and forced to mix with the starch liquor in the converter. The supply of steam to this upper steam cleansing pipe is controlled by the globe valve d^{14}. The other steam cleansing pipe d^{13} for the blow-off pipe d^{11} is arranged to enter the bottom of the converter and to project upward in the lower end of the blow-off pipe, so that steam can be introduced in an upward direction in the blow-off pipe, for the purposes either of cleansing the same or of assisting the upward flow of the contents through it while they are being discharged from the converter. This lower blow-off pipe d^{13} is fitted with a globe-valve d^{15}.

The converter is further fitted with a man-hole and man-hole plate d^{16}, and with a steam gauge d^{17}, so that the pressure of steam within the converter, and consequently the temperature which corresponds with such pressure, can be readily observed and regulated.

In order that the contents of the converter when discharged may be collected without material loss, the blow-off tank E is provided. This tank is arranged by preference considerably above the converter, so that the contents of the converter can be raised to a high level in the building, whence they can descend by gravitation to have other operations effected upon them. This blow-off tank is closed at the top with the exception of a vent pipe e, which is conducted by preference through the roof of the building, and permits the steam to pass off. The discharge end of the blow-off pipe is turned downwards into the blow-off tank E, and is perforated so that the liquid is discharged in small jets. The perforated portion of the discharge pipe is surrounded by deflecting plates e^1, which deflect the jets of liquor in a downward direc-

tion, and thus obstruct its passage toward the upper part of the discharge tank, and prevent the carrying off of the liquor with the steam escaping through the vent pipe. The liquor collected in the bottom of the blow-off tank E may be drawn off at intervals by means of a pipe and stop-cock, or it may be permitted to flow at once through an open pipe into a tank H arranged below the level of the blow-off pipe. In the latter case the vent pipe *e* should extend into the lower tank to conduct the steam to the exterior of the building.

When the converter is empty and clean, the starch liquor is admitted through the inlet pipe d^4, either mixed with the acid or separately, the acid in the latter case being let in before the starch liquor through a pipe d^{20}. Steam may at the same time be introduced through the perforated steam-coil *d*, so as to heat the starch liquor as it enters. The excess of steam and any air there may be in the converter are permitted to escape during the inlet of starch through the steam outlet d^3.

When the charge of starch liquor and acid is introduced, the starch-inlet valve d^5 is closed, and if the liquor is to be boiled at a temperature not exceeding its boiling-point under the atmospheric pressure, the steam outlet is left open while the steam for heating the contents of the converter continues to be introduced through the steam inlet pipe d^1.

When the contents of the converter are to be heated to a temperature higher than that of boiling under the atmospheric pressure, the steam outlet d^3 is closed or partially closed, and the pressure within the converter is permitted to rise to the desired degree by introducing steam through the inlet pipe d^1, as determined by observing the steam gauge and by regulating the inlet of steam by the steam valve. The condition of the liquor within the converter can at any time be tested by the test cocks d^6 d^7, care being taken to cleanse the test pipe d^8 of the latter cock by the introduction of steam by means of the steam pipe d^9 before each test. The contents of

the blow-off pipe d^{11} should also be discharged at intervals in a downward direction by steam admitted through the pipe d^{12}, so that they may become mixed with the mass in the converter.

When the contents have been converted to the desired extent, the valve of the blow-off pipe d^{11} is opened, and the contents of the converter are discharged in an upward direction into the blow-off tank E, to which the blow-off pipe conveys them. After the discharge, the blow-off pipe is thoroughly cleansed by admitting steam into it by means of the lower steam cleansing pipe d^{13}, and, if necessary, steam is admitted through this pipe during the discharge to facilitate the upward movement of the liquor.

In preparing the starch for this conversion, Jebb adds to the liquid starch in the tub C^3 sulphuric acid of a gravity of from 60° to 65° diluted with water in the proportion of about two parts of water to three parts of acid. The quantity of acid is preferably so regulated that 1 lb. of the said acid is employed for every 50 lb. of solid starch contained in the liquid. These proportions may, however, be varied if desired.

If preferred, the acid and the starch liquid can be introduced into the converter separately. In this case a portion of the acid is introduced into the converter through the pipe d^{20} before the starch liquid is supplied, and the rest of the acid is gradually supplied in the same measure as the converter becomes filled with starch liquid. In either case, a small quantity of water is first placed in the converter, so as to cover the steam jets in the bottom of the converter to a sufficient depth to prevent the issuing steam from coming in direct contact with the starch liquid, as it is introduced into the converter.

The water placed in the converter is first heated to the boiling-point, and the starch liquid is then introduced into the converter, preferably in thin streams or sprays. After the charge of starch liquid has been placed in the converter D,

the pipe through which the starch liquid is introduced is closed, and the contents of the converter are then boiled until the conversion is completed. This is readily determined by any of the well-known tests. The conversion is usually completed in about 20 minutes.

During the operation of conversion the steam pressure in the converter is maintained at from 40 lb. to 60 lb. to the square inch. When the conversion is completed, the discharge pipe d^{11} of the converter is opened, and the contents of the converter are forced out through the discharge pipe and delivered into the receiving tank E, in which the hot liquor parts with its steam. The steam pressure in the converter is temporarily increased, if necessary, to elevate the hot liquor to the receiving tank E.

When it is desired to convert the starch for the manufacture of solid grape-sugar in an open converter, the starch is reduced in the tank C^3 by the admission of water to a gravity of about 20° B. An open converter, suitable for this purpose, consists essentially of a tank or vat F, open at the top, and provided at or near its bottom with one or more perforated steam pipes *f*, through which fine jets of steam can be injected into the converter, and which has a suitable discharge pipe f^1 at or near its bottom, through which the contents of the converter can be drawn off. The starch liquid is mixed with sulphuric acid in about the proportion stated with reference to the conversion in a closed converter. If preferred a portion of the diluted acid is first placed in the converter and the rest of the acid is introduced into the converter in a small stream, as the starch liquid is delivered. The steam pipes on the bottom of the converter are covered with water to a suitable depth, which water is heated to the boiling-point before the starch liquid is introduced into the converter in several streams or in a spray, and the charge is then boiled until the conversion is completed, which generally requires about 4 hours, and which is easily determined by any of the well-known tests.

When the conversion is completed, the contents of the converter are discharged through the pipe f^1 into a neutralising tank G.

When the starch is to be converted in an open converter for the manufacture of liquid glucose, the starch liquid is mixed with water in the agitating tank C^3 to a specific gravity of about 16° or 17° B. Sulphuric acid diluted as before stated is then added to the starch liquid in the proportion of about 1 lb. of acid of a gravity of 60° to 65° to every 75 lb. of solid starch contained in the liquid. If preferred, a portion of the diluted acid can first be placed in the converter, and the rest of the acid introduced in a small stream as the starch liquid is delivered. The starch liquid is then introduced into the converter as before described, and boiled until the proper degree of conversion is reached, when the contents of the converter are discharged through the pipe f^1 into the neutralising vat G.

Instead of sulphuric acid, oxalic acid, muriatic acid, or nitric acid can be used, but Jebb prefers to employ sulphuric acid for converting the starch into solid grape-sugar and oxalic acid for converting starch into liquid glucose.

If it is desired to manufacture solid grape-sugar and liquid glucose at the same time, two mixing tubs C^3 are provided, in one of which the starch liquid is properly prepared for conversion into solid grape-sugar, while in the other tub the starch liquid is prepared for conversion into liquid glucose, and from which tubs the prepared liquid is conducted into separate converters.

If it is desired to manufacture white and hard grape-sugar of a superior quality the material is treated in the following manner: After the converted starch liquid discharged from the closed converter has parted with its steam in the tank E, it is drawn into a neutralising tank H, where the acid contained in the liquid is neutralised by adding suitable material, such as marble dust, chalk, or the like.

A quantity of pulverised bone-black is introduced at the same time for bleaching the liquid. This neutralising-tank is provided with a revolving rake, whereby the materials are intimately mixed. After this operation is completed, the liquid is drawn from the tank H into a settling tank I, in which the material is permitted to come to a state of rest, whereby the neutralising agent and bone-black are caused to subside or settle on the bottom of the tank. The supernatant liquid is now filtered through the press-filter P or bag-filter P^1, and the filtrate is collected in tanks P^2. From the latter the filtrate is pumped by a pump P^3 to one or more bleaching-tanks J, in which the liquid is subjected to the action of sulphurous acid gas for bleaching it. This gas is preferably generated by burning sulphur in a suitable furnace K, and is forced by means of a pump *k* through suitable pipes k^1 into the liquid contained in the bleaching-tanks J. The pipe leading from the sulphur furnace to the pump passes through a cooling vessel k^2, containing water and provided with a water inlet and overflow pipe for supplying the cooling vessel with cold water and removing the warm water. In passing through the pipe in this cooling vessel the gas is cooled before reaching the pump, and the latter is thereby protected against the injurious effects of hot gas. In passing from the pump to the bleaching-tank J the gas is conducted through a closed washing vessel k^3, in which the gas passes through a body of water, and is thereby freed from all condensible and soluble impurities. The pipes k^1 which conduct the gas to the several bleaching-tanks are provided with suitable stop-cocks or valves, whereby the admission of gas to the bleaching-tanks is regulated. Those parts of the pump *k* which come in contact with the gas are constructed of brass, or of iron lined with lead or other suitable metal which resists the action of the gas. A further quantity of powdered bone-black may be added, if desired, to the liquid in the bleaching-tanks J. The liquid is drawn from the said bleaching-tanks into a receiver L, in

which the liquid is permitted to come to a state of rest and in which the heavy material settles to the bottom. The supernatant liquid is then pumped to a press-filter or filters M, or bag-filters M^1, or both, and the filtrate is repeatedly passed through these filters until it has reached the desired degree of purity. The filtrate is collected in a receiving tank N, and is passed from the latter through a bone-black filter N^1, such as used for the filtration of the sugar-liquid in the manufacture of sugar from cane or beet. The filter N^1 represented in the drawings, consists of an upright cylindrical case filled with bone-black and provided at its upper end with a perforated pipe, through which the liquor is fed into the filter, and at its bottom with a pipe, through which the filtrate is discharged into a tank O. The filtrate is then drawn into the vacuum-pan O^1, and either entirely or partially concentrated therein. If only partially concentrated, the liquid is drawn from the vacuum-pan into a receiving tank O^2, and again filtered through pressure or bag-filters, or both, and through bone-black filters, and then again returned to the vacuum-pan, where the concentration is completed. If the concentration is completed in one operation, the concentrated liquid is filtered through bag or pressure filters and through bone-black filters after it comes from the vacuum-pan. The material is passed through the filters as many times as may be necessary to bring the material to the desired degree of purity.

When the bone-black with which the filters N^1 are charged requires to be revived, it is removed from the filters through the manholes near their bottoms, and is drawn into a carriage N^2, which is then removed over a hopper N^3, into which the contents of the carriage are dumped. The bone-black is fed from this hopper to a shaking sieve N^4, supplied with water spray pipes, whereby a portion of the foreign matter is separated from the bone-black. The water and the fine bone-black, which pass through the meshes of the sieve N^4, are collected in a box N^5 having suitable perforations through

which the water is permitted to drain off, while the bone-black remains behind. The coarse bone-black passes over the tail of the shaking sieve into a spout N^6, which conducts the same to a steam tank N^7, in which the bone-black is subjected to the action of steam, whereby another considerable portion of the impurities is removed. The bone-black is finally placed in a kiln of well-known construction in which it is subjected to heat, whereby the process of reviving is completed.

If the material is designed to be manufactured into solid grape-sugar, and derived from an open converter, it is neutralised in the tank G, and therein mixed with bone-black, and then permitted to partially settle. The liquid is then pumped to a settling tank I^1, in which the heavy material is deposited. The supernatant liquid is then filtered through press filters P or bag filters P^1 into receiving tanks P^2, and the filtrate is pumped from the receiving tanks to the bleaching-tanks J, if it is desired to bleach the material by means of sulphurous acid; the operation of bleaching is then carried on as before described, and the material is filtered through the press filter M, or bag filters M^1, or both, and into a tank N, then concentrated by one or more treatments in the vacuum-pan, and again filtered, if necessary. If the material is not to be bleached by sulphurous acid, it is taken from the receiving tank P^2 directly to the vacuum-pan for concentration, or first to the filters M or M^1 and is treated by filtration and concentration, as may be necessary to produce a product of the desired quality.

In treating material derived from an open converter F, for the manufacture of liquid glucose or syrup, the material is neutralised, settled, and filtered through press or bag filters, bleached, again filtered, and concentrated in the vacuum-pan by one or more treatments, as may be desired. If preferred, the liquid may be taken from the settling vats L directly to the vacuum-pan, and afterwards to the filters M or M^1.

If the liquid is concentrated in the vacuum-pan in more than

one operation, it is concentrated by the first treatment to a gravity of about 25° B., and afterwards in the final concentration to about 40° B. In all cases, the finished product obtained from the vacuum-pan is preferably filtered through bag or press filters. The liquid is maintained at a temperature of 145° to 160° F. in the neutralising tanks and in the succeeding steps until it reaches the vacuum-pan. This is accomplished by steam coils arranged in the several tanks. After the liquid has been concentrated to 25° B., its temperature should not exceed 140° F. An additional quantity of sulphurous acid is introduced into the vacuum-pan during concentration, if desired, to further bleach the liquid.

In manufacturing liquid glucose or syrup, the material, after the final concentration and filtration, is taken to a cooling apparatus Q, in which the material is rapidly deprived of its heat.

In the cooling apparatus which Jebb prefers to use, the material is agitated and caused to circulate in contact with coils of pipe through which flows a current of cold water. In this cooling apparatus, the liquid is agitated until cool, and is then drawn into barrels or other receptacles, in which it is disposed of to the trade; or it may be first mixed with syrup obtained from cane or beet, if preferred.

In manufacturing solid grape-sugar, the material, after final concentration and filtration, is cooled as above described, and then either drawn into barrels or boxes in which it is permitted to harden, or it is drawn from the cooling apparatus into pans or moulds *q* of suitable size, in which the material is permitted to harden, or it is mixed with dry pulverised grape-sugar and then permitted to harden, or mixed with cane or beet sugar either before or after becoming solid.

After scraping, cutting, or pulverising the solid grape sugar, by means of a scraping or cutting machine R, or by means of a grinding, disintegrating, or crushing mill, or both, it may be mixed with granulated or pulverised cane or beet sugar.

Another method consists in mixing a portion of the cane or beet sugar with grape sugar while the latter is in a liquid state, then permitting the liquid to become hard, then scraping or pulverising the compound, and mixing the scraped or pulverised material with an additional quantity of cane or beet sugar reduced to a similar degree of fineness. When the material is delivered from the cooling apparatus into moulds or pans, the latter are preferably placed in a drying chamber S, in or through which air is caused to circulate, by means of a suction fan S^1, or a blast fan, pump, or chimney, and in which the sugar is rapidly deprived of its heat and moisture. Air is admitted to the chamber through registers or openings *s* in its bottom. After the sugar has become sufficiently hard to permit its removal from the pans or moulds, it is taken out of the pans and placed in the drying chamber S, and therein fully exposed on all sides to the drying and cooling action of the air current.

The bran and other coarse offal which is separated from the starch water by the sifting machine B is taken to a squeezing machine T, consisting essentially of one or more pairs of horizontal rollers, arranged one above the other, and an endless apron of wire cloth, or other porous material, which runs over suitable pulleys and passes between the said rollers, and which conducts the wet offal between the said rollers, whereby the water is pressed out of the offal and caused to pass through the meshes of the endless apron, while the solid portions of the offal remain upon the endless apron and are carried off by the same. The rollers of the squeezing machine are covered with rubber, or other elastic material.

The offal is conducted from the squeezing machine to a centrifugal machine U, or to a hydraulic press, in which the offal is again subjected to pressure (preferably a more severe pressure), whereby the remaining moisture is pressed out. If the offal is very much compacted during the operation of

compressing, it is taken to a grinding or crushing mill, or a disintegrating machine U^1, whereby it is broken up and disintegrated and prepared for the drier. The offal is next placed in a drying apparatus V, in which it is dried by steam or other heat, and prepared for storage or shipment. The feed is sold in the condition in which it comes from the drier, or it is reground in a grinding, crushing, or disintegrating mill W, and sold in that condition, or after having been so reground it is mixed with corn, meal, or other ground grain in a disintegrating mill or other suitable mixing machine. The addition of corn, meal, or other ground grain to the offal increases the nutritive value of the feed, and renders the same more palatable to the cattle.

The tanks, vats, or vessels in which acid is used are preferably constructed of galvanised iron or lead.

A grain storehouse, containing a number of bins or receptacles arranged side by side, and constructed of planks laid one upon the other, as represented at X, and provided with endless belt and bucket elevators, whereby the grain is elevated to the bins, and with spouts for discharging the grain from the bins, is connected with the manufactory. The engines, shafting, and other machinery for actuating the various machines are not shown.

Payen's Method.—The conversion of the starch into sugar is performed in large wooden vats A (Fig. 167), each having a capacity of 350 bushels, and their staves a thickness of about 4 inches. A leaden pipe *b c d* runs into the vat A to the bottom *c d*, the parts *c d* having slits at short distances. The vat is filled to about one-third of its capacity with sulphuric acid water ; this is heated by admitting steam from the boiler *i* through the copper pipe *g e b* (fitted with a stop-cock *h*) and the leaden pipe *b c d*. During the boiling, the vat is covered, and the vapours drawn off are immediately conducted into a chimney, or passed through a main pipe into the worm E F, to be utilised for the evaporation. If these

vapours escape at once through the chimney, they will create a nuisance; whereas by the cooling off in the worm, the volatile oils become in a great measure condensed with the steam, and thus collect between the pipes F G in the vessels placed below. In this way the non-condensed parts escape through the pipe C along with the vapours, and are not noticeable. To

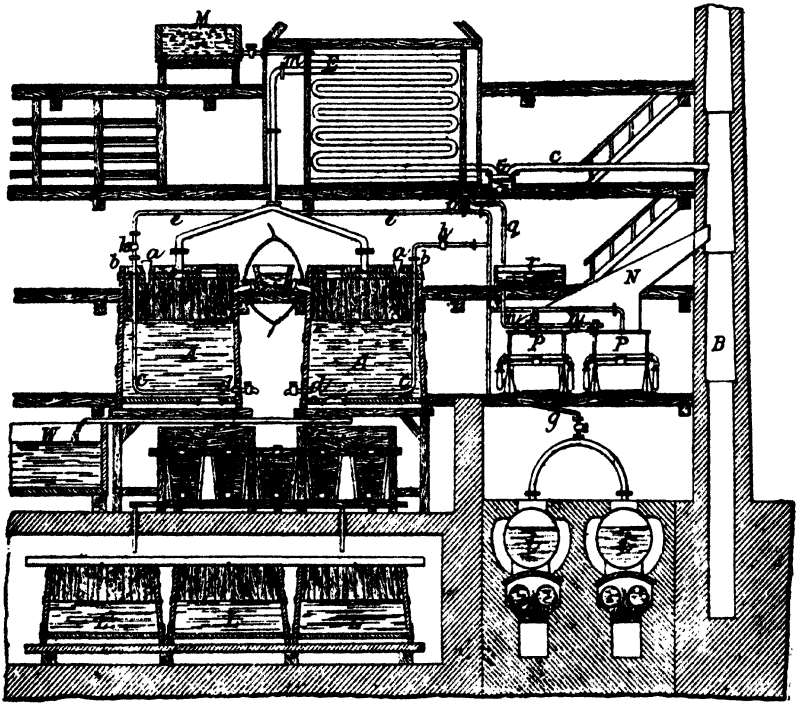

FIG. 167.—PAYEN'S CONVERTER.

entirely destroy the vapours, they may be conducted into the fireplace under the boiler.

Into the vat A, is poured about 6600 lb. of water, mixed with half the sulphuric acid necessary for the transformation of the starch, and heated to 100° C. (212° F.). Meantime 6600 lb. of commercial dry starch is placed in a vat of corresponding size set above the boiling-coop. Into this, the

other half of the requisite sulphuric acid (in the present instance 66 to 132 lb.) and a corresponding quantity of water have previously been poured, in order to produce starch-milk. This starch-milk is admitted into the boiling-coop by a cock situated in the bottom of the upper vat, and runs in a uniform stream through the funnel *a* into the boiling vat or "converter." The less the water, in comparison with the amount of starch to be converted, the more care must be taken during the admission of the starch-milk, so that the boiling is not interrupted for a moment. By the gradual admission of the starch-milk, the temperature increases, finally reaching the boiling-point of an equally concentrated sugar solution.

When all the starch-milk has passed into the boiling sulphuric acid water, requiring 1 to 1½ hour, the boiling is continued for 2 to 3 hours, in the case of glucose, and for 4 to 6 in the case of sugar.

When the transformation is finished, the free sulphuric acid is neutralised as usual, and the liquor is allowed to settle for 12 hours. This can be done either in the coop itself, or in the tank W. The clear liquor is drawn off, heated to 60° C. (140° F.), and refined through the charcoal filters H. The gypsum residue is placed over a linen filter and washed out.

The thin juice filtered through the bone-black, being 15° to 16° B., is collected in the lower reservoirs L, whence it is pumped into the upper reservoir M; thence it flows off into the horizontal chamber *m*, supplied with a number of slits, and runs down through the side slits over the heated worm E F. Under this, the syrup collects in a gutter *p*, and flows through the pipe *q* into the reservoir *r*, where it is finally drawn off as required by the pipe *s* and the spigots *n*, thence to run into the evaporating pans P. Over these pans is a wooden casing N, to conduct the steam into the chimney B. The syrup is evaporated in these vessels to 30° B.; again some gypsum

becomes separated, and must be removed by prolonged depositing.

The starch syrup thus obtained is at once serviceable for distillers and brewers. For many applications, however, as baking, cordials, etc., it is, after 24 hours, re-heated to 60° C. (140° F.), filtered through coarse animal charcoal, and immediately barrelled.

This method finds application in but few establishments.

Manbré's Method.—The conversion of starch into sugar proceeds much faster when the boiling takes place under pressure: upon this fact rests Manbré's method. The mixture of starch with diluted sulphuric acid is boiled at a high

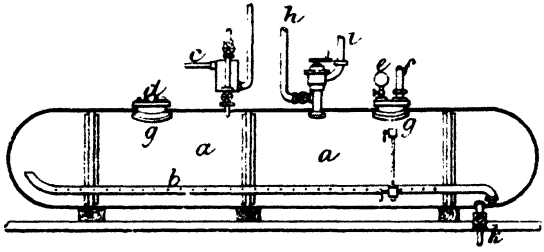

FIG. 168.—MANBRÉ'S CONVERTER.

pressure, and at a temperature of 160° C. (320° F.). By this treatment, the action of the acid is increased, the transformation is more perfect, and the volatile oils which impart a disagreeable flavour are distilled off and destroyed. Use is made of a steam-boiler, constructed to withstand a pressure of 99 lb. per square inch (6 atmospheres); it is lined inside with lead, and covered outside with a double casing. The intermediate space between the boiler and the casing is about 4 inches wide and filled with non-conducting material. In the boiler *a* (Fig. 168), is placed a perforated leaden steam-pipe *b*. The starch-milk is admitted by the pipe *c*, supplied with a stop-cock; the boiler is supplied with safety-valves *d*, test-cock *e*, thermometer *f*, manholes *g*, receiving-

pipe *h* for the products of distillation (volatile empyreumatic oils), steam-pipe *i*, liquor-gauge *k*, steam-pipe *l*, outlet-cock *m*, and water-pipe *n*.

The substances are prepared for the boiler as follows: 61½ lb. of sulphuric acid at 60° B. are diluted in 6150 lb. of water. While this mixture is heated in the boiler to 100° C. (212° F.), a further 61½ lb. of sulphuric acid is diluted in 6150 lb. of water in an open wooden tank, supplied with a stirring apparatus. This mixture is heated by steam to 30° C. (86° F.). Into this latter liquid, 2464 lb. of starch are well stirred, and heated to 38° C. (100·4° F.). The starch-milk thus obtained is gradually poured into the boiling diluted sulphuric acid of the boiler by the pipe *c*, and the mixture is kept at a boil. As soon as all the starch is in the boiler, the cock of the conduit-pipe is closed, and steam is admitted until a temperature of 160° C. (320° F.) and a pressure of 6 atmospheres are attained. The cocks *h i* are then opened for the outlet of steam and the products of distillation, while the temperature of the liquid is maintained by steam in the pipe *b* at 160° C. (320° F.), until samples taken out by the cock *k* indicate complete transformation. This is attained, according to the purity of the starch, in 2 to 4 hours. After ceasing to form sugar, the sweet liquor is to be drawn off, for the neutralisation of the sulphuric acid, into an open wooden vessel, supplied with a stirring apparatus and waste-cock, and 185 lb. of purified carbonate of lime are stirred into 550 lb. of water, and gradually added to the liquor. The sulphate of lime thus formed is allowed to deposit, which occupies 2 to 4 hours. The neutral saccharine solution is filtered, evaporated, cleared, and crystallised as usual. The product is entirely pure and free from any bitter or empyreumatic flavour.

Rössling and Reichardt's Process.—Rössling and Reichardt's apparatus for the manufacture of starch sugar on a small scale is shown in Fig. 169. *a* is the furnace opening; *b*, the fire-place; *c d*, the mechanism for supporting the barrel, consisting

of a ring-plate and pipe; *e*, the ashpit; *f*, apertures with pipes and cocks; *g*, the neck of the boiler; *h*, the barrel of white pine, with a bottom at least 1 inch thick; *i*, a tube made of linden or maple, 2 inches thick and ¾ inch wide; *k*, a pipe with four steam outlets below, two of which are visible at *l m*.

Anthon's Method.—Excellent sugar is furnished by the method invented by E. F. Anthon, and patented in many countries. The manipulation is as follows:—

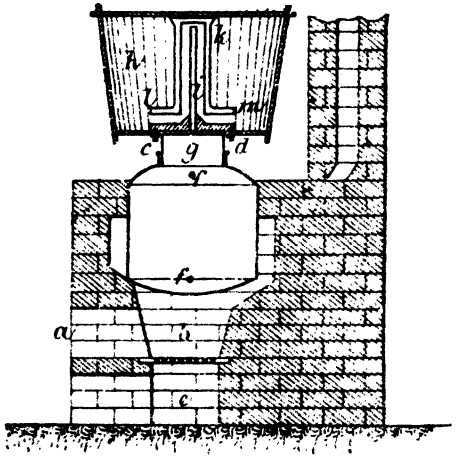

FIG. 169.—RÖSSLING AND REICHARDT'S CONVERTER.

Boiling.—2640 lb. of dry starch are stirred up in 370 gallons of water to a homogeneous milk, and run uniformly into the converter, previously charged with 53 gallons of water and 48 lb. of oil of vitriol, and brought to the boiling-point, so that the mass boils uninterruptedly. During winter, the starch may be stirred with tepid water, but not so warm that it becomes pasty. When the mixture has been kept at a boil for about one hour after the entire mass has been emptied in, the boiling is continued for 4 to 5 hours longer

for making hard crystallised sugar, but when syrup is intended, 3 hours' boiling suffices.

Neutralisation.—For this purpose, 66 lb. of good bone-black and 55 to 66 lb. of purified chalk are used. The chalk must previously be mixed in water and strained through a fine sieve. At first, 22 lb. of bone-black are gradually thrown in, and then the chalk-milk is poured in through a leaden pipe reaching down to the lower half of the boiling-vat. But great care must be taken that the seething liquid does not flow over. When the mixture reacts but moderately acid, the adding of chalk is interrupted, and the balance of 44 lb. of bone-black is added. It should be made a rule that one-third of the bone-black is to be added before throwing in the chalk, and two-thirds afterwards.

The finished mixture is boiled gently for about 10 minutes, and passed through a Taylor filter.

Evaporation.—For common coagulated sugar, the syrup is concentrated to 33° or 36° B. (hot); but for hard sugar, to about 33° B. (hot). The syrup is passed through a small Taylor filter, cooled, and a few lb. of half-congealed sugar of a former boiling are added and thoroughly stirred in. After 10 to 30 hours, the mass will become so stiff that for common sugar it can be put into barrels and left to harden. For hard sugar, the evaporation is stopped at 33° B., the stirring is not so strong, and is not so often repeated when the partly coagulated sugar is being added. When the body of the sugar has attained a completely stiff consistency, so that it can only be scooped out with difficulty, it is then to be subjected to pressure in a filter-press or centrifugal machine (see pp. 570–575).

To make loaf-sugar, the press-cakes or sugar taken from the centrifugal are broken up into small pieces and melted, without adding water. This is done in a kettle over a steam-bath, aided by occasional gentle stirring, in a temperature as low as possible, continued until all lumps have crumbled, but

not until the fine parts are dissolved. For 880 lb. of sugar, the operation occupies 3 to 4 hours. Complete solution of the sugar must be avoided, since those particles which float in the solution favour crystallisation. When the mass has attained the proper consistency, it is cast into the moulds; in 2 days it is entirely solid.

The press-syrup can either be mixed with such syrup as contains a large amount of dextrine, and sold as such, or boiled and worked over again so as to make a second product of press-cakes. To this end, it is evaporated to 36° to 37° B. (hot), cooled off and coagulated as usual, and pressed out. The press-cakes thus obtained are inferior, and it is best to dispose of the press-syrups as such.

To obtain a product of the whitest possible colour, the application of sulphurous acid is resorted to. After half the chalk has been applied in the neutralisation, 3 to 4 lb. of dry or 11 lb. of liquid sulphate of lime is added, continuing the boiling for 10 minutes, and then adding the rest of the chalk. It is imperative to carry out the process with great cleanliness, and to use no water which contains hygroscopic ingredients, or will be turned brown by sulphuric acid.

In Anthon's method for producing 3 to 4 cwt. of starch sugar per 24 hours, the ingredients for a boiling are:—

370 lb. of air-dry starch.	2·46 to 3·70 lb. of pure burned lime.
11 ,, of sulphuric acid of 66° B.	4·95 lb. of prepared chalk.
3·70 ,, of bone-black.	

The apparatus is very simple, and is represented in Fig. 170: *a* is the pan; *b*, a vat of about 8½ bushels capacity, with a wooden spigot *g* at the bottom: *c*, a Taylor filter in a case 4 feet high and 2 feet wide and deep, arranged for the reception of 9 bags, each about 2½ feet in length, and 6 to 7 inches diameter when filled, and set up so that the thin liquor can be drawn off by a small gutter into *e*. The bags are made of grey linen of prime quality and uniform weft, and are fastened over the funnels *f* with strong cord.

Capillaire-Syrup and Sugar.—Some few establishments manufacture a water-clear syrup, which in a very condensed state, is known in the market as "capillaire-syrup," and is extensively used by confectioners and others in the United States. The mode of producing it is as follows: After the usual boiling and neutralisation, the clear, thin liquor of 16° to 20° B. is concentrated in a vacuum-pan to 30° B. (boiling hot). The vacuum-pan is of copper, because by this process the gypsum deposits itself on the copper pipes as firmly as stone, and the pipes have to be frequently cleaned by aid of muriatic acid.

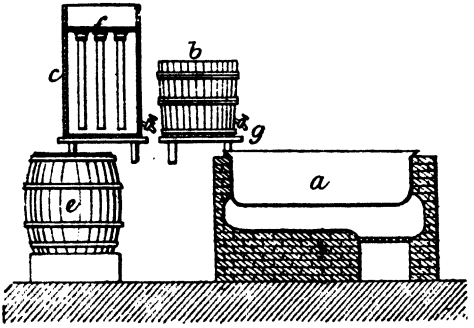

FIG. 170.—ANTHON'S APPARATUS.

If the temperature can be maintained at 57½° to 63¾° C. (145½° to 146¾° F.), the syrup will remain of a lighter colour, as also with rapid evaporation. Since the gypsum never completely separates from this heavy syrup, filter-presses are used. Thus the clarifying is much accelerated, and the thin syrup issues from the filter-presses free from gypsum, and entirely clear. It is directly pumped into the reservoir, thence to the bone-black filter, and is then sucked into the vacuum-pan, and evaporated at 56½° to 62½° C. (133¾° to 144½° F.). If the syrup is for exportation, the concentration is carried to 44° B. at 61° C. (142° F.) The evaporation goes on very quickly, since the syrup already possesses a consistency of

from 28° to 30° B. It has to be filled into the casks while yet lukewarm. If it cools off entirely, it will not run out of the vats at all.

The perfectly white and finest quality of starch sugar which also passes through the bone-black filters, is known as "capillaire grape sugar," and is manipulated in a similar way with this difference, that the syrup at the last stage is concentrated to 44° or 45° B., while for the production of sugar, the process of evaporating must be stopped as soon as the syrup has reached the consistency of 40° to 41° B. This sugar has been mostly packed in cases of 1 cwt.; but more recently it is cast into blocks and loaves, which are afterwards grated, and the sugar packed in bags. This method of packing in bags is more practical and advantageous than packing it in boxes, since the sugar adheres to the wood of the boxes, and much of it is lost.

Soxhlet, of Munich, takes the ordinary starch sugar of commerce and mixes with it 70 or 80 per cent. of alcohol of 80° Tralles, or pure wood naphtha (methyl alcohol). Pulverised starch sugar is then added to this syrupy mixture, and the whole is left to solidify at a temperature *above* 30° C. (86° F.), with frequent stirring. The syrup obtained in making starch sugar can also be treated in this way. The mass of crystals thus obtained is pressed and put into a centrifugal machine. The alcohol is recovered by distillation.

For making solid transparent starch sugar (dextrose hydrate, $C_6H_{12}O_6H_2O$) the starch sugar solution is concentrated in a vacuum to 46° B. (taken at 90° C.), and put in moulds to crystallise at a temperature between 35° and 50° C. (95° to 122° F.). At lower temperatures the well-known warty crystals form.

This method depends, it will be observed, upon the removal of uncrystallisable and unfermentable substances from the sugar by means of ethylic or methylic alcohol, in which grape sugar is itself but slightly soluble.

Granulated Starch Sugar.—The manufacture of granulated starch sugar was introduced by Fouchard, at Neuilly, France. The transformation of the starch into sugar is accomplished in the ordinary manner, but at an increased temperature and pressure, as a great amount of dextrine would hinder the granulation of the sugar.

The liquor, saturated with lime, is run through a bone-black filter, to impart to it the colour of a nice clear "covering" sugar. The filtered liquor is evaporated in summer to 30° B., in winter to 28° B. (boiling), and run into capacious clearing-tanks, where the greater part of the gypsum settles; the tanks are in a cool place, or the cooling is accelerated by the use of worms in which cold water circulates, so as to avoid fermentation. After the lapse of 24 to 30 hours the syrup is cool and clear, and is then placed in vertical barrels, left open above, and whose bottoms are perforated with small holes, thus forming a sieve bottom. During the process of crystallisation, these openings are kept closed with small wooden pegs or taps. The barrels stand on a frame-work over a lead-lined gutter.

In 10 to 12 days, crystallisation begins by the formation of small accumulations in the syrup, which gradually increase. As soon as the syrup is about two-thirds filled with crystals, the holes in the bottom of the barrels are opened, draining off the molasses, while the soft crystalline accumulations remain in the barrels.

As soon as the draining appears to be finished, this is perfected by placing the barrels in an inclined position. The molasses thus obtained is again boiled in sulphuric acid water to transform the dextrine present into sugar. The granulated sugar is then placed on gypsum slabs to the thickness of 4 inches, and dried at 22° to 25° C. (71½° to 77° F.). By increasing the temperature, the crystals would melt and stick together. This lump formation cannot be entirely avoided. If the lower part of the layer begins to become dry and white,

it is turned. In 3 or 4 days the sugar becomes perfectly dry and is then, for the purpose of an even separation, ground through a sieve, while the lumps which do not pass through the sieve are ground between a pair of porcupine rollers. Usually the sugar is again spread on gypsum slabs.

Uses of Starch Sugar and Glucoses.—These products are used chiefly for the manufacture of table syrups, candies, bee-food, brewing, and artificial honey-making. All soft candies, waxes, and toffies, and a large proportion of stick candies and caramels, are made of starch-sugar syrup. Very often a little cane-sugar is mixed, in order to give a sweeter taste to the candies, but the amount of this is made as small as possible. A very large percentage of all the starch sugar made is used for the manufacture of table-syrups. Some kind of cane-sugar syrup is added until the tint reaches a certain standard. The amount of cane-sugar syrup required varies from 3 to 10 per cent., according to circumstances. These syrups are graded A, B, C, etc., the tint growing deeper with each succeeding letter. Small quantities of starch-sugar syrup are used by vinegar-makers, tobacconists, wine-makers, distillers, mucilage-makers, and perhaps in some other industries.

The solid sugar is also used for many of the purposes enumerated, but chiefly for the adulteration of other sugars. When it is reduced to fine powder, it can be mixed with cane sugar in any proportions, without altering its appearance. Since starch sugar costs much less than cane-sugar, this adulteration proves immensely profitable.

The cost of manufacture is about ½*d.* a lb. Some 26 to 32 lb. are made from a bushel of corn. It is sold by the manufacturers at 1½*d.* to 2*d.* a lb.

SUGAR REFINING

CHAPTER XXI.

THE processes described in the preceding part of this book for the manufacture of raw sugar from cane, beet-root, and other sources, yield in some cases sugar more or less fit for direct consumption, such as "Demerara" and "Beet crystals," but generally speaking, raw sugar contains impurities which are evident in its colour, odour, and taste, and which prevent its use in any highly civilised community, until it has been submitted to a process of refining. To separate these impurities, two modes of treatment are successively made use of: in the first of these, various ingredients, such as sand, colouring matters, etc., are removed from the sugar solution by the Taylor filter and by charcoal, and in the second, the sugar itself is separated by crystallisation and machining, from the rest of the impurities which remain in solution.

In some modes of refining, such as the so-called "in and in" system, whilst the insoluble matters and part of the colouring substances are removed, most of the soluble mineral ingredients remain in the lower qualities of sugar turned out, no syrup being produced.

The following are the chief considerations to be borne in mind in selecting the site of a refinery: The ground should be capable of affording a foundation of a substantial character. There should be an ample supply of water for dissolving the

raw sugar, and for washing the charcoal; soft water is best for these purposes, but if only hard water can be had, it should be softened previous to use by Clark's process, or some modification of the same. A considerable amount of water which need not, however, be of such good quality, is needed for the purpose of condensation. The site must be well chosen both for the purchase of raw sugar and the distribution and sale of the refined products, it should therefore have direct access to railways and navigable water. Lastly, fuel should be procurable at a moderate price, and the rate of wages should be low. Refineries are usually seven or eight stories high, and the sugar having been hoisted to the topmost floor, descends by gravitation during the different processes, so that the operation of pumping is, to a great extent, avoided. Sometimes, however, a refinery is constructed with only three or four stories, and then it is necessary to frequently raise the liquor by means of a pump or *monte-jus*, from one stage of the process to another.

Plate XI. gives a general idea of a sugar refinery, as designed by Duncan Stewart and Co., Glasgow, to turn out centrifugal sugars; it is useful as showing the relative position of the various apparatus which are described later on in detail. The building is in two parts; one containing the char cisterns, and the other the rest of the refining plant, as may be seen by reference to the following letters: A, hopper to which the char from the kilns (situated in another building and not shown in the illustration) is conveyed. B, conveyor delivering the char into C, receiving tank, from which it is delivered to any pipe. D, a short pipe, being temporarily attached to the end of these pipes, leading to the cisterns during the filling operation. E, char cisterns. F, wet char bands delivering char from cisterns to kilns. G, water tank forming the roof of the refinery. H, garret. I, melting pans or blowups. J, steaming tank for washing empty packages. K, Taylor filters. L1, tanks for washing filter bags. L2, raw

Co. Glasgow.

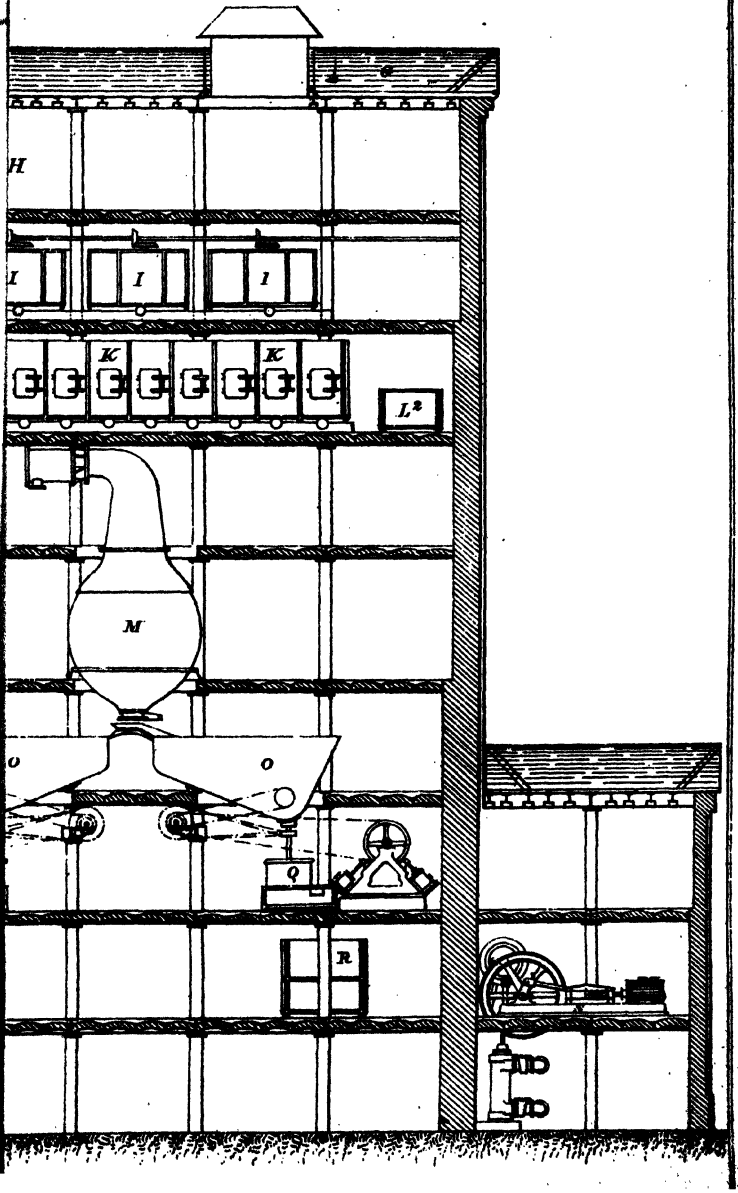

liquor tanks. M, vacuum-pan. N, vacuum-pump. O, heaters. P, refined liquor and syrup tanks. Q, centrifugal machines. R, tanks for receiving syrup from centrifugal machine. S, water pipe and engine for driving same.

Preparatory Treatment of Raw Sugar.

It is now quite usual, both in this country and on the Continent, to partially purify low grainy raw sugar, particularly beet sugar, by means of steam, water, or syrup, in a centrifugal machine, generally of special construction. In this way the purchase of high-class raw sugar is rended unnecessary, as, by the process of washing, the low raw sugar yields a product containing a large percentage of sugar, which can be employed in the manufacture of any variety of white-refined, and a residual impure syrup, which is either suitable for making pieces or refined syrup. If raw beet sugar be treated in this way, and one or two crops of sugar are boiled from the syrup, the final residue is only fit for distillation or cattle food. Special centrifugal machines have been devised for washing sugar with steam, etc., by Weinrich, Duncan and Newlands, Walker and Patterson, and by Frémaux, and many others. When the washing is effected by water or syrup without steam, centrifugal machines of any kind are used ; but as the use of these purifying agents results in a less yield than in the case of steam, it is not advisable to employ them.

Weinrich's Process.—This mode of working is the invention of Moritz Weinrich. By means of his centrifugal machine, beet sugar can be purified by steam to such an extent that it is fit for consumption, and indeed most of the German and Austrian so-called granulated sugar, which finds its way to the English market, is merely beet sugar washed in this way. Crushed loaf-sugar and a soft kind of cube sugar are also produced by a slight variation in the mode of working. Fig. 171 shows the construction of the machine. The basket *b* is

provided with a movable ring *h*, which rests in a recess in the top of the framework of the basket, and is held down in its place by a number of bolts *i i*. The vertical shaft *c* passes through a cylindrical closed box *d*, which contains a number of flat iron balance rings *x*. The diameter of the central holes in these rings is larger than the diameter of the shaft, so that they can move freely, and thus by changing the centre of

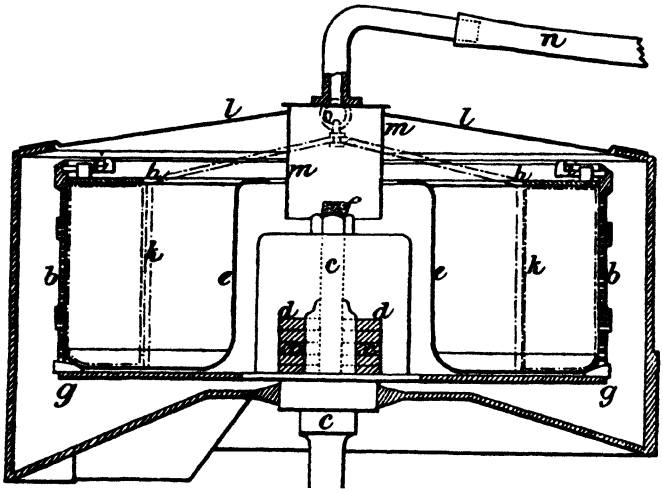

FIG. 171.—WEINRICH'S CENTRIFUGAL.

gravity, correct any unequal movement of the basket. The annular guard *e*, which is carried up above the steam inlet *f*, serves to catch any condensed water and convey it away. The bottom of the annular guard is raised slightly by means of radiating strips of metal or wedges *g g*, so as to provide a space for the egress of the water. The mode of working is as follows: The ring *h* having been removed, a filling drum *k*

is inserted, and the sugar is filled into the annular space surrounding it, and pressed slightly with the hand. The ring is then replaced, the bolts being driven into the bolt holes with a wooden mallet, and the basket is caused slowly to revolve. When, owing to centrifugal force, the sugar leaves the drum, the latter is withdrawn, and the lid *l*, which carries the mouth of the steam-pipe *n*, is shut down. The speed is then increased, and steam of from 1 to 5 lb. pressure is turned on. The steam passes into the guard *e*, which removes any water it may contain, and then flows over the top of the guard into the space behind the sugar, and finally condenses in the latter, passing away as impure syrup. When the sugar is washed sufficiently, the machine is stopped, and the steam is turned off. The sugar is then taken out of the basket and melted to produce refined sugar of high quality. If it is desired to produce a white sugar for consumption, the raw sugar is first intimately mixed with a small quantity of ultramarine, and the final product is sifted in the warm state as soon as possible after being machined. To produce hard sugar, the raw sugar is blued as in the case of granulated, and 4 wooden wedges are fixed vertically in the basket at an equal distance apart to facilitate the removal of the sugar. The operation is conducted as before, except that after the steam has been turned off, the basket is allowed to revolve for some minutes to dry the sugar. The wedges are removed by means of an iron rod, which is inserted into rings with which they are provided, and the sugar can then be removed in the form of blocks, which are either sawn into slabs and cut into cubes or reduced in a mill to the state known as crushed sugar. This and similar processes yield with good grainy and raw sugar a product weighing 80 to 90 per cent., and polarising from 99 to 99·75 per cent., and in the case of a low raw sugar, a product weighing from 65 to 70 per cent., and polarising from 97 to 98·5 per cent. The time required for the operation varies with the quality of the raw

material and the degree of purity desired in the product, from 10 to 40 minutes. With low sugars deficient in grain, such as China and Jaggery, it is necessary to prepare them for the washing by melting and graining in the vacuum-pan, the *masse-cuite* being run into the machine, and the syrup being again evaporated in the vacuum-pan, so as to yield a second or even a third crop. In this way about 45 per cent. of the total sugar is obtained from the first *masse-cuite*, 15 to 20 per cent. from the second, and 8 to 10 from the third, the residual molasses being only fit for distillation, or cattle food. The following analyses show the effect of the Weinrich process when working with grainy beet and cane sugar.

BEET SUGAR.

—	Before Treatment	After Treatment
Sugar	93·30	98·60
Ash	1·58	0·16
Moisture	2·64	0·06
Undetermined substances	2·48	1·18
	100·00	100·00
Rendement or available sugar ..	85·40	97·80

CANE SUGAR.

	Before Treatment	After Treatment
Sugar	90·70	98·60
Glucose	2·70	0·36
Ash	1·14	0·31
Moisture	3·74	0·12
Undetermined substances	1·72	0·61
	100·00	100·00
Rendement or available sugar	82·30	96·69

The syrup is generally boiled up to obtain one or two

crops of sugar, which are again steamed, the final syrup being sold for distillation.

Water-Driven Centrifugals.—In addition to the many other advantages which can be claimed for Watson, Laidlaw and Co.'s patent water-driven centrifugal of the Weston type

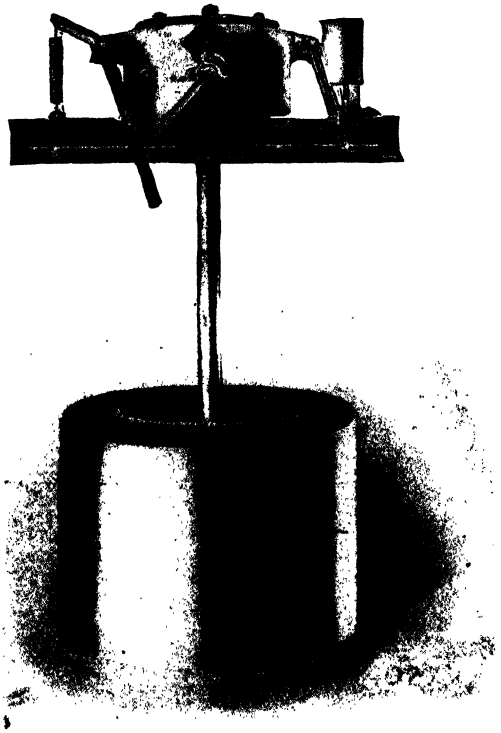

FIG. 172.—WATSON, LAIDLAW AND CO.'S WATER-DRIVEN CENTRIFUGAL.

over the belt-driven machine is its perfect adaptability to the treatment of all classes of sugar. It is well known, that to obtain the best results in drying different grades of sugar, the centrifugal should be got up to full speed very quickly for fine sugars, and more slowly for the lower grades. These machines

with 42-inch baskets, each discharging 600 lb. of dry crystal sugar, with the charge run in while the machine was running, was fully charged and up to full speed in 45 seconds from starting. This gave a uniform thickness of the wall of sugar in the basket, and consequently turned out a uniform sample of sugar, besides getting the work done very rapidly. On the other hand, when drying fine grained low sugars it is important that the machine should not attain full speed under 3 or 4 minutes, according to the weight of the charge run in. If the speed be got up too quickly with low sugars, the maximum centrifugal force is too suddenly developed, and the sugar being heavier than the molasses, is thrown against the lining and packed so closely that the molasses floats to the inside, and is with great difficulty caused to pass through the sugar and out into the molasses collector. With belt-driven machines, this change of speed can only be effected by altering the speed of the engine, whereas, with the water-driven machines, the water pressure can be modified at any moment to effect the desired change in the speed of the machine. The water motors which drive the baskets of the centrifugals are of the Pelton type, and each is fitted with two separate water jets, operated in conjunction or separately as may be convenient. Economy of water is not lost sight of, inasmuch as one jet is automatically closed as soon as full speed has been attained, and by increasing or diminishing the size of this accelerating jet, the time required for the centrifugal to attain its maximum speed can be varied at will.

Electrically Driven Centrifugals.—Watson, Laidlaw and Co. have also applied electro motors to drive centrifugals, the motors being applied directly to the spindle of the machine, the whole weight of the motor being carried directly from the frame work beams, and therefore does not form an addition to the load on the spindle. These are made to suit the voltage in use and for either continuous or alternating currents, Fig. 173.

The motor drives the centrifugal through the medium of an ordinary centrifugal friction clutch. The motor does not oscillate with the centrifugal, and the clearances between the

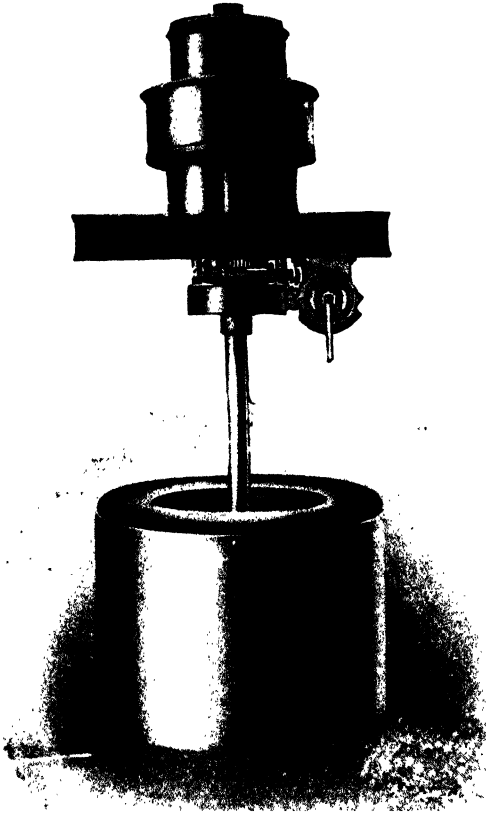

FIG. 173.—WATSON, LAIDLAW AND CO.'S ELECTRICALLY-DRIVEN CENTRIFUGAL.

moving and stationary parts of the motor may therefore be as small as possible to meet electrical demands. As the motor is independent of the centrifugal, it can be designed on its own merits in the most efficient manner. The centrifugal is

as simple in construction as the ordinary Weston machine, and hangs on a rubber buffer in the same manner. The use of the centrifugal friction clutch between the motor and the centrifugal allows the motor to attain its speed rapidly, the centrifugal following until both are running at the same speed, the action being exactly the same as in the standard Weston centrifugal friction pulley, and dispenses with the need for electrical resistance when the motor is first started. While the motor is fixed to the framework, it is so constructed that it can be disconnected from the centrifugal in a few minutes, a worm and wheel, N, Fig. 174, being provided for this purpose, and the removal is effected without disturbing any of the electrical connections. The operations of starting, stopping and applying the brake are made by one lever, and, as the act of applying the brake opens the switch of the motor, there is no possibility of the motor being started when the brake is on. In Fig. 174, I is the patent hollow post, J the pin attaching the motor to the stool, K the driver keyed to the motor spindle, L friction shoes, N worm and wheel, Q nut to adjust buffers, R brake, V outer revolving spindle, Z switch.

In Patterson's patent syrup classifying centrifugal, the machine is charged with massecuite in the position shown (Fig. 175). The syrup spun out is caught on the cones A A, and directed against the suspended guard B, whence it passes into the ordinary gutter in the bottom C. When washing commences, the guard B is lowered into the position shown by the dotted lines, by the hand wheel D, and chain pulleys E, below the lip of the cones F; thus permitting the washings to be projected against the thick copper wire cloth G, and conducted with little splash into the special gutter H, whence it is conveyed by the spout I, to a suitable receptacle, to be returned to the pan, separately from the syrup. The separated washings can then be used for boiling the same class of sugar as that from which they were washed instead of mixing with the

ordinary spun syrup and passing to the next lower grade as is the usual method.

Systematic Washing.—William Ritter in 1843 took out an English patent for a process of *clairçage continu,* or "continued

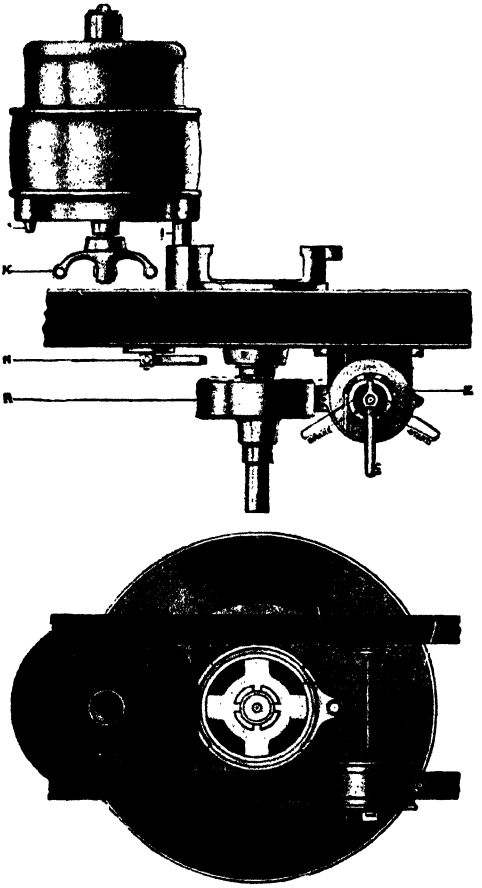

FIG. 174.—OUTSIDE VIEW AND PLAN SHOWING ELECTRO-MOTOR DETACHED FROM ITS "WESTON" CENTRIFUGAL.

purification," which consists in pouring upon the smoothed surface of the sugar successive coats or coverings of a saturated solution of sugar increasing in purity as the sugar becomes

more and more purified and cleansed from molasses, colouring matter, etc. The effect of this continued purification is to concentrate the whole of the matters which soil the crystals of the sugar into the smallest possible solution of sugar. The liquids resulting from these washings are collected separately, and are thus employed in future operations.

From experiments made by Anthon, an account of which he published in 1868, he was led to the conclusion that raw sugar consisted of pure crystals each covered with a film of molasses. Steffen shared this view and claimed in his wash-

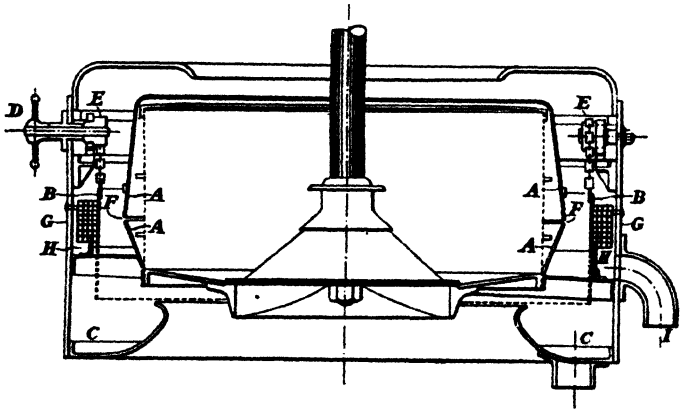

FIG. 175.—PATTERSON'S CENTRIFUGAL.

ing process, in which raw sugar is methodically treated with cold saturated solutions of sugar of increasing purity from molasses to white clairce, to separate raw sugar into white sugar and molasses. In practice, this expectation is not fully realised, the final syrup having a purity of about 70, while that of molasses properly so-called should not exceed 60. No other process, however, gives so high a yield of white sugar at so little expense, and it has been largely adopted in refineries in Germany, Austria, France, and Belgium.

The mode of procedure is the following :—

The raw sugar is introduced into large open cylinders with

false bottoms composed of perforated sheet iron, on which is placed gauze as used for centrifugals; the collecting space below is placed in communication with the aspirating pipe of a syrup pump. The first syrup which has about the composition of molasses, is then run on to the sugar, when this has disappeared under the crystals, the second syrup is added, and so on until 32 syrups have been added. Each of these syrups represents 7 per cent. of the weight of the sugar put in process, and requires from 20 to 30 minutes to disappear under the crystals. The pump is started after the addition of the ninth or tenth syrup, and is regulated so as to maintain a vacuum of 8 to 12 cm. of mercury under the false bottom.

Let us suppose the following sugar has been used:—

Crystallisable sugar	95·80
Uncrystallisable sugar	nil
Sulphated ash × 9/10	1·40
Water	1·28
Organic matter	1·52
	100·00

This sugar, according to Steffen would yield 92·98 per cent. of crystals, and 7·02 of syrup. The syrup would contain:—

Crystallisable = Water × 2·2 = ...	2·82
Uncrystallisable	nil
Ash × 9/10	1·40
Water	1·28
Organic matter	1·52
	7·02

In this determination of syrups Steffen does not take into account the solvent action of the water on the sugar, or the molasses-forming power of the salts and organic matter. In practice he obtained 89·84 per cent. of dry crystals, and 10·16 per cent. of syrup having the following composition:—

—	Dry Crystals	Syrup at 78·7 Brix
Crystallisable sugar	99·85	54·00
Uncrystallisable sugar	nil	nil
Ash × 9/10	0·07	11·85
Water	nil	21·30
Organic matter	0·08	12·85
	100·00	100·00
Quotient of purity		68·60

The series of 32 syrups vary from the lowest 78·3 Brix and 69·70 purity, or slightly purer than molasses, to 66·4 Brix and 99·90 purity, the purity and density of the successive syrups varying very little from one to the other which permits of nearly rigorous displacement of one by the other without mixing and without reciprocal diffusion of the substances which they take into solution.

When each of the syrups up to the 32nd has been drawn off to the extent of 10 per cent. on the weight of the raw sugar, 40 to 50 per cent. of white clairce is added to remove any remaining syrup. The various syrups are run into a special reservoir divided into 32 compartments, into which, after the first syrup is set aside, the syrups aspirated by the pump are run, and at the same time fractionated to the extent of 7 per cent. on the weight of the raw sugar placed in process. Owing to the methodic fractionation, these syrups may be used indefinitely.

The sugar thus treated is centrifugaled, losing therein about half of the added white clairce; this clairce is utilised in the following operations. The sugar is then dried in a granulator, the yield being as follows:—

Dry crystals	89·84 to 89·84
Dry sugar from the clairce retained around the crystals	12·00 ,, 16·00
Net rendement of	101·84 ,, 105·84

Massecuites may be treated in the same manner. The cost of this treatment is 1·25 franc per quintal; and this is not the only advantage of this process. There is no destruction of sugar during the work in the factory, neither any loss during evaporation and boiling to grain. A finished product is obtained in less than 24 hours. In the case where the sugars are to be purified with a view to remelting them, the cost will be about half a franc per quintal with suppression of centrifugals and granulator.

In order that the syrups shall run freely, it is imperative to keep them from becoming oversaturated through drying, when fine grain would form and hinder the running; water must therefore be added to the syrups as far as is necessary to maintain them at the saturation point. As the saturation is dependent on the temperature, the room in which the washing vessels are placed must be maintained at a uniform temperature. The viscosity of each of the syrups will in that case remain constant also. The low temperature at which the washing syrups are kept leads to danger from micro-organisms, the syrups are therefore kept alkaline by the addition, if necessary, of sodium carbonate, and the clairce is treated with a small amount of antiseptic.

All sugars are not equally suitable for washing, for unless the grain is uniform, the drainage is very slow. Such sugars are preferably treated by the process introduced by E. Langen, the sugar, mixed with syrup or water, is drawn into the vacuum-pan, and boiled until the fine grain has dissolved. The mass is then subjected to crystallisation in motion, and the larger grain grown in the surrounding syrup forms ultimately a sugar mass eminently suitable for washing in the Steffen process.

Ordinary Refining Processes.

The raw sugar, either after it has been washed in the manner just described, or in its untreated condition, is un-

packed, the empty casks or hogsheads being steamed, and the bags washed twice or thrice to remove the adhering sugar.

Solution.—The sugar is passed through gratings in the floor of the garret into the blow-up (melting-pan), Fig. 176. This is an open cylindrical vessel 4 or 5 feet deep and of varying diameter, capable of holding from 3 to 10 tons of sugar in the form of a solution. It is provided with mixing gear and one or two steam worms for heating its contents with close steam or a perforated pipe for the admission of live steam. These worms are generally protected from damage by a perforated

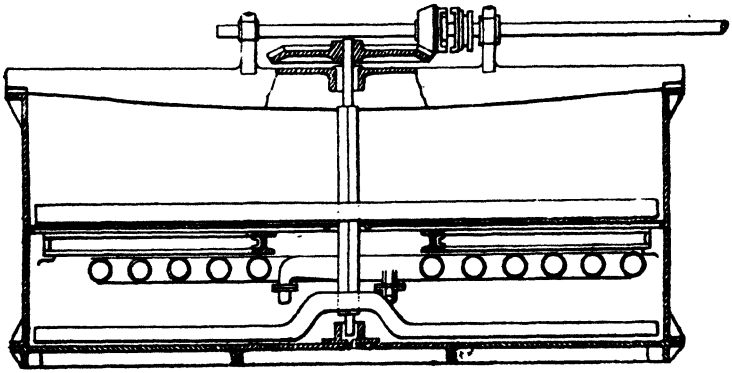

FIG. 176.—BLOW-UP.

false bottom or grid. There are cocks at the top for the admission of hot water, sweet washings, and syrup.

Fig. 177 represents an improved form of blow-up, designed by Blake, Barclay and Co., of Greenock. This apparatus is similar in most respects to that already described, the principal point of difference being that the liquor is drawn off through strainers extending the whole height of the apparatus, so that the grosser mechanical impurities are prevented from passing on to the Taylor filters. It contains four worms, arranged so as to produce an equal heating over the whole bottom of the blow-up.

Blow-ups have been made with close tops so that the suga

could either be melted *in vacuo*, in which case they were connected with a condenser or vacuum pump, or they could be employed as *monte-jus*, their contents being forced to a higher

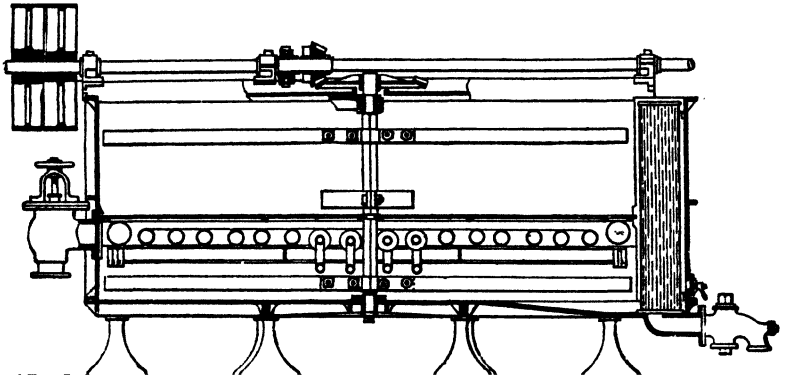

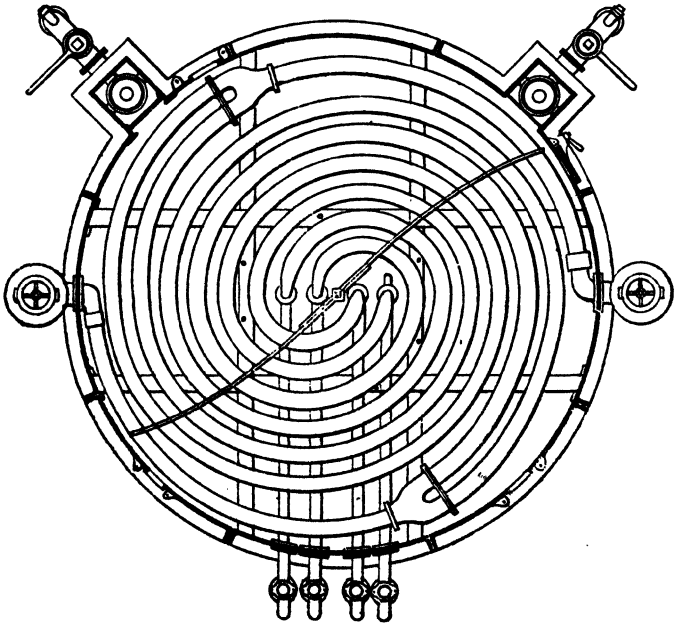

FIG. 177.—BLAKE, BARCLAY AND CO.'S BLOW-UP.

level by air or steam pressure. In many refineries the melting is effected on the ground floor of the raw sugar store outside the refinery, the blow-ups being placed in a well below the floor and covered with a grating. The liquor, roughly made up to the required temperature and density, is pumped by means of plunger pumps into a second blow-up on the top floor of the refinery, where the temperature and density, are care-

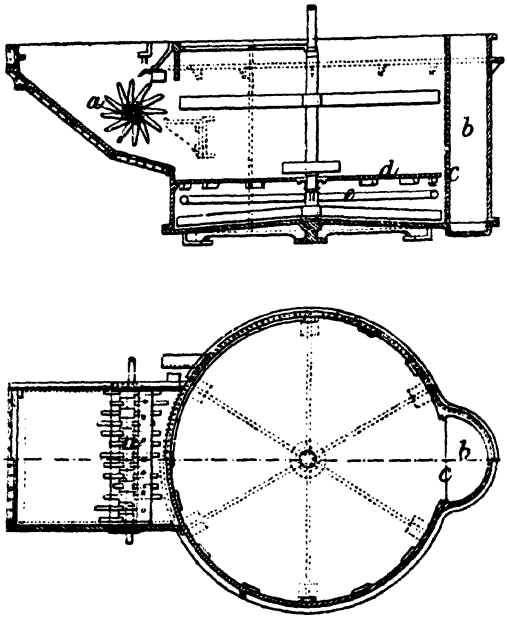

FIGS. 178, 179.—DEELEY'S BLOW-UP.

fully adjusted. Crushing apparatus is usually fixed above the blow-up, and particularly where low sugars are refined, for the purpose of reducing the large pieces of sugar to such a size as not to injure the stirring gear.

Figs. 178 and 179 show a sectional elevation and plan of a blow-up, designed by R. Deeley and Co., of New York, and used in the United States refineries. Attached to this

blow-up and directly communicating therewith is a chamber containing a crushing mill, *a*, so arranged that the sugar while being crushed is partially or totally immersed in the liquor, and it has a chamber, *b*, on one side, separated from the blow-up by a perforated metal plate, *c*, through which the liquor runs away when the charge is complete. It has also a perforated false bottom, *d*, placed over the steam worm, *e*, and is provided with suitable stirring gear.

The melting process is carried out as follows: A sufficient quantity of water or sweet washings to cover the worms, having been run into the blow-up, steam is turned on, and sugar and water are added in such proportions that by the time the charge is complete the density is from 28° to 30° Beaumé, and the temperature from 150° to 170° F. Some refiners prefer to raise the temperature higher than indicated in the case of low sugars to help the filtration, but the use of a high temperature is not to be recommended on account of the resulting injury to colour.

Defecants of various kinds are often employed to aid in the separation of the colouring matters and other impurities, and particularly to facilitate the operation of filtration. The acid in cane sugar is in some refineries neutralised with lime, and the employment of phosphoric acid in conjunction with lime has come into pretty general use. In the latter case the precipitated phosphate of lime produces a considerable improvement in colour and in the rate of filtration. It is important that the phosphoric acid so employed should be free from lime, sulphuric acid, arsenic, iron, and other impurities. A. Boake, Roberts and Co., of Stratford, London, are now producing, by a very ingenious process, phosphoric acid in a high state of purity and well adapted for this purpose.

The addition to the liquor in the blow-ups of alumina, sulphate of alumina, or alum with sufficient lime to throw down the alumina, has been employed with similar results. Nearly every common soluble substance, mineral or organic,

which is capable of being precipitated by the addition of another substance has been patented for this purpose, and the question of the poisonous nature of the materials does not seem to have struck some of the inventors as being a matter of any importance. The addition of many porous and granular insoluble substances has been patented, and to some extent employed with the object of rendering the after process of filtration more rapid.

Kieselguhr or Fossil Meal is an eminently suitable material for filtering sugar solutions, the filtrates being strikingly limpid and brilliant. Heddle, Glen and Duncan Stewart patented the use of this substance in 1886 in this country, and Wiechmann took out a patent the same year in the United States. As he used it chiefly for cane sugars, he proposed the addition of 2 to 3 per cent. of fossil meal; for beetroot sugars 1 per cent. or less is sufficient. Soxhlet followed in 1893 with a mixture of fine sawdust and kieselguhr, a few tenths per cent. of each material being added to beetroot juice which was then filter-pressed. The chief merit of Soxhlet's process lay in the fact that the solution was filtered cold, thus avoiding the destruction of sugar which is found to occur when sugar solutions are maintained for long periods at a high temperature.

Sugar is sometimes analysed and mixed before melting so as to ensure an even quality, and this is chiefly done in refineries where loaf or cube sugar is turned out, so as to render the product uniform.

Filtration.—The liquor on leaving the blow-ups runs through a perforated metal or wire strainer to remove any coarse mechanical impurities, and is conveyed by metal gutters to the Taylor filters which are placed on the floor below. A pair of these filters is shown, in elevation, in Fig. 180, with the front plate partly removed.

The use of bag filters was introduced by Cleland in 1824, and the apparatus was modified and greatly improved by

Taylor in 1830. As at present employed the Taylor filter, Fig. 180, consists of a chamber *a*, made of cast-iron plates, open at the top, and having a horizontal divisional plate *b* about one foot from the top, forming a receiving tank or filter head.

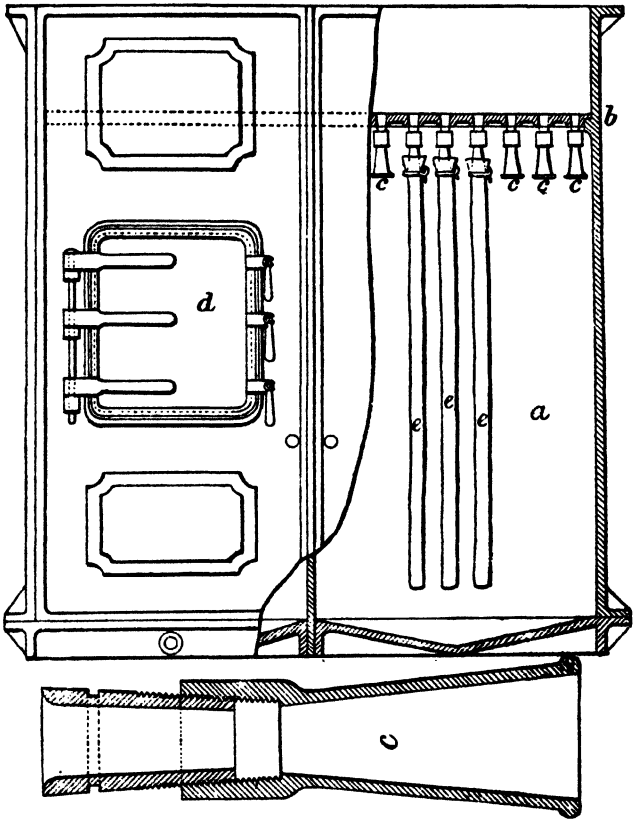

FIG. 180.—DOUBLE TAYLOR FILTER.

This plate is perforated with holes, in rows a short distance apart, these being fitted with gun-metal sockets furnished with screw threads for the reception of gun-metal bells *c*, to which the bags are tied. The filter chamber is provided with a tightly fitting door *d*, and cocks for supplying steam, and the

bottom, which is doubly inclined, has a cock for the egress of the liquor. The rows of holes in the divisional plate are sometimes divided by partitions, so that every row of bags may receive its due charge of liquor. The bottom of the filter head is usually inclined, its lower end being under the liquor cock, so that each row of filters may be filled in rotation, and the work of the filter be rendered more uniform, thus attaining the same object as is effected by the use of partitions. The bags *e* are made of twilled cotton, and when laid flat are about 6 feet long by 2 to 3 feet wide, and they are either woven without a longitudinal seam or sewn up. These bags are crumpled up and slipped inside of coarsely woven hempen sheaths which are open at both ends and are about 6 inches longer than the bags, and from 6 to 9 inches wide when laid flat. These serve to restrict the expansion of the bags, thus giving a large filtering surface in a small space. The bell is inserted up to the screw part into the opening of the bag, and the latter, together with the upper end of the sheath, which is brought level with it, is firmly tied on with cotton cord. The bell is then screwed in its place, and on account of its shape causes a tight joint to be made, when the bag is weighted with liquor. The number of bags contained in each chamber varies from 100 to 500, or even more in different refineries. The amount of liquor that can be filtered through each bag mainly depends upon the kind of sugar, and also, to some extent, upon the temperature and degree of dilution and use of defecating agents. It is therefore impossible to give precise figures as to this point, but it may be said generally, that in a refinery working with a medium quality of sugar, consisting of half cane and half beetroot, from 10 to 13 bags per ton are required. The mode of conducting the filtration is as follows: The chambers having been filled with bags, the doors are screwed up, and steam is turned on for a few minutes, so as to thoroughly warm the filters. Any condensed water is then allowed to flow away,

and the liquor is run on to the filter-heads. As the liquor flows from the filter, it is frequently sampled, and should it prove cloudy, owing to the rupture of any of the bags, it is run away into the sweet-water tank. By carefully inspecting the filter-head, the faulty bags can generally be detected by the unusually rapid currents of liquor passing down them, and their nozzles should be immediately closed up. The clear liquor from the filters runs into fine liquor tanks on the floor below. When the bags become dirty and practically cease to allow the liquor to flow through them, the inlet cock is closed, and the bags are allowed to drain for some hours. Steam is then turned on, and the bags are filled with hot water and left to drain the second time, and this operation is repeated until a sample of the washings, or bag-water, no longer shows any indications of the presence of sugar, when tested by a hydrometer. The bag-water is run into a tank by itself, and is used in place of water for dissolving raw sugar. When the filter is sufficiently cold, the bells are unscrewed, and the bags and sheaths are removed from the chamber, and the cords being untied, the sheaths are slipped off the bags, and the latter are then washed. The washing is conducted in a series of three or four tanks containing warm water; the first of these tanks contains the dirtiest water and the last the cleanest. Each bag is turned inside out in the first tank, and by a dexterous movement on the part of the workman it is filled with air, which is imprisoned in it by closing the opening with one hand. The bag is then forced under the water, and the air is driven through its pores, thus removing the adhering impurities, and this operation is repeated in each of the other tanks, and finally the bag is turned with the right side out.

Wringing machines, consisting of a pair of rollers, are sometimes placed between the tanks, and through these the bags are passed, thereby removing the dirty water which is caused to flow into the preceding tank. The mode of washing sugar out of the bags *in situ* is generally employed in the

United Kingdom, and, when high-class sugars are used, gives satisfactory results, but, with low sugars, containing a large amount of insoluble impurities (sometimes sufficient to half

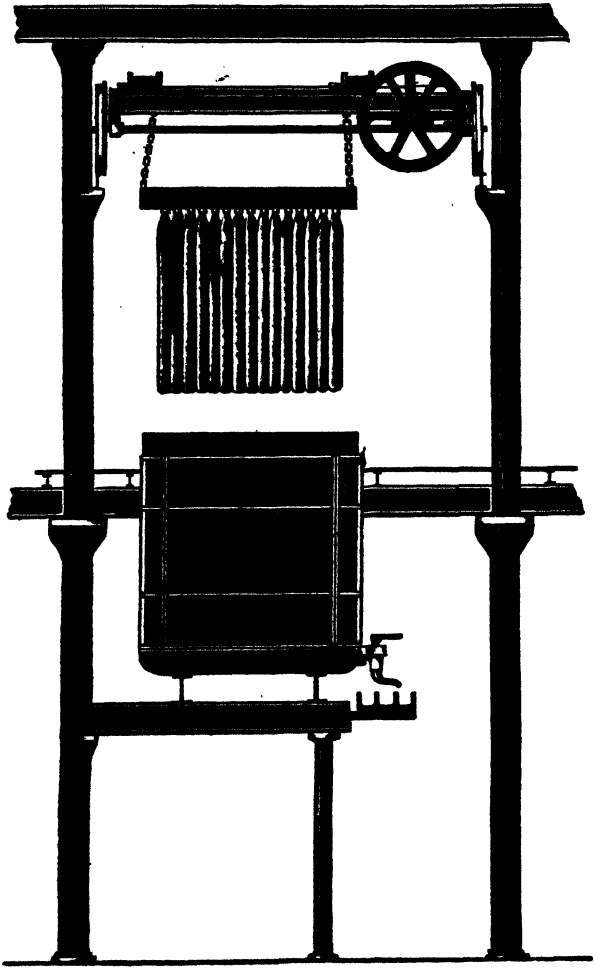

FIG. 181.—FAWCETT, PRESTON AND CO.'S IMPROVED BAG FILTER.

fill the bags), the muddy deposit always retains a notable proportion of sugar, even after the most careful and repeated washing. The use of steam also tends to injure the fibre of

the bags, and some refiners, therefore, instead of washing the bags in the filter chambers, remove them direct to the washing tanks, the operation of washing being conducted in the way just described. The wash-water, however, after the addition of lime, or other defecant, is filtered through a scum or filter-press, and is used for dissolving raw sugar.

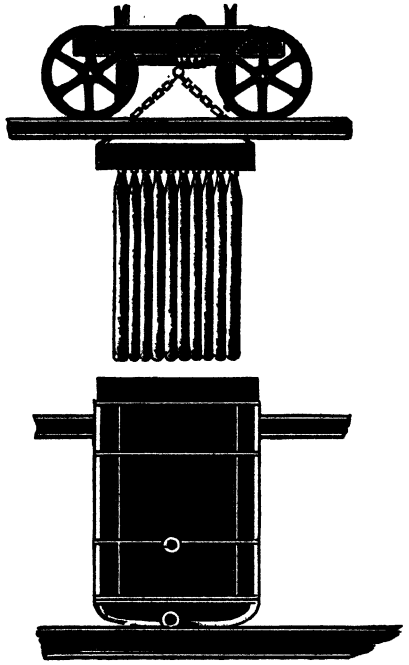

FIG. 181A.—FAWCETT, PRESTON AND CO.'S IMPROVED BAG FILTER.

Fawcett, Preston and Co. have constructed a modification of the Taylor filter, the top plate being made portable, and fitting into a groove with a rubber joint in the side plates. The top plate is held down by wrought-iron bolts at each corner. When the bags are dirty, the plate is removed, together with the bags, by means of an over-head crane, and replaced by another plate with clean bags attached to it, and the filter can be got in this way to work again in a few minutes. In addition to a saving in time there is also an economy in labour, as the men have no occasion to work in the hot interior of the filter.

In some refineries, especially on the Continent, where beet-root sugar only is refined, filter presses take the place of Taylor filters, but they do not give satisfactory results with cane sugar. Various proposals have been made to add certain substances to the liquor, with the view of rendering filter presses available for cane sugar; thus, Remmers has

patented the use of powdered wood charcoal, Kleeman that of lignite, and Cassamajor that of sawdust, and all of these have been tried on the large scale, but without any decided success.

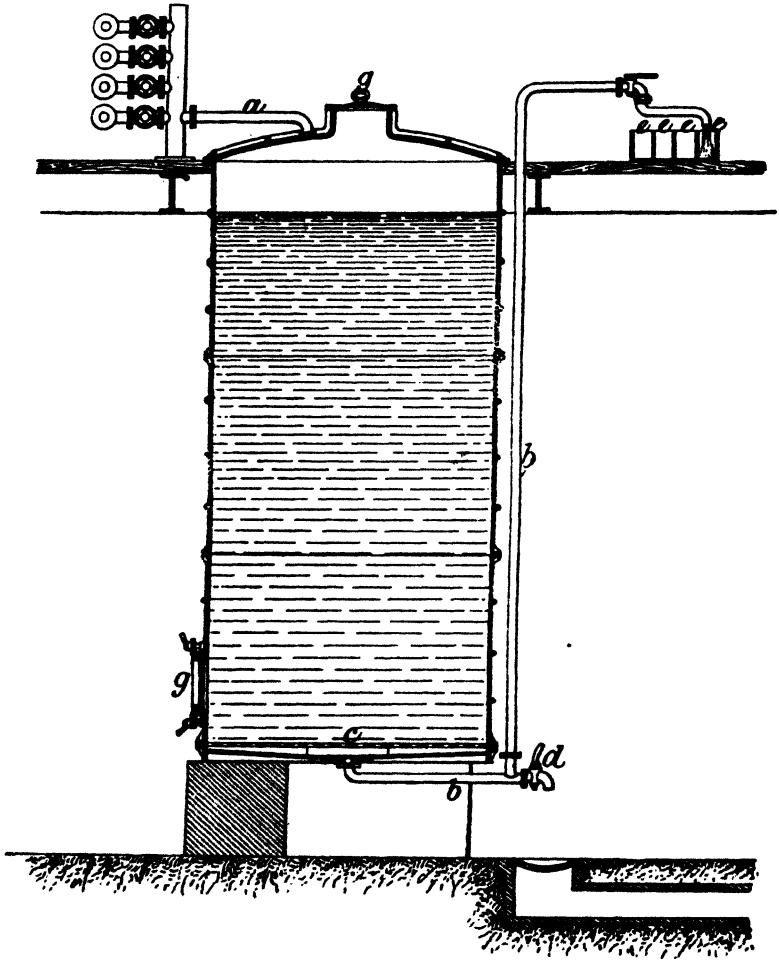

FIG. 182.—CHAR CISTERN.

After being filtered, the liquor is decolorised by means of animal charcoal, or "char," as it is technically termed.

Decolorisation.—The apparatus, Fig. 182, employed for this

purpose is known by the name of a char cistern. These cisterns consist of large cast- or wrought-iron cylinders, and are usually about 10 feet in diameter, and 20 feet high, but the dimensions preferred by different refiners vary considerably. They are provided with manholes, *g g*, at the top and side for the introduction and withdrawal of the char.

The raw liquor and water for washing find their way into the cistern through the pipe *a*, which communicates with an upright main connected with various tanks containing a supply of water and of the different liquors.

The bottom of the char cistern inclines towards its centre so as to cause the liquor to run to the outlet pipe *b*. A short distance above the bottom is a perforated wood or iron false bottom *c*, which, when in use is covered with a blanket or with a flaxen cloth to prevent the passage of any fine char. As shown in the engraving, the outlet pipe *b* is represented as terminating at a level above the top of the cistern head, and this is usually the case, the liquor being forced into the charcoal cistern under pressure. The water, however, is discharged by the cock *d*, at the bottom of the charcoal cistern. The outlet pipe *b* terminates in a pipe having a swivel joint, and thus enables the liquor to be discharged into any one of the four gutters *e e* leading to at least as many storage tanks.

The cistern is filled with reburned char through a jointed pipe surmounted by a hopper into which the char falls from a band conveyor. As the char descends it is levelled by a man inside the cistern, who also removes the pipe, in lengths, as the filling progresses. Though the char is usually levelled in this manner, the work is both disagreeable and dangerous, and the man is therefore in some refineries replaced by a mechanical leveller. It is questionable whether this levelling is of much consequence, but the prevailing opinion is that less sweet water is made than when the char is not so levelled.

On the cistern being filled with char to within a short

distance of the top, the cover of the upper man-hole is closed, and, the cock at the bottom of the cistern having been opened, to allow the air to escape, cold water is passed through the char to reduce its temperature, and this is followed by liquor. The whole of the liquor put upon a char cistern, may be of one quality, but it is usual to begin with a good quality, and to follow on with one or more lower qualities, the last liquor being made from syrups, or char-washings resulting from previous operations. One advantage of this method of working is, that the sweet char-washings, which contain many impurities, are made from a material of low value.

When the liquor commences to come through, the outlet-cock is turned off, and the liquor is allowed to rest or "settle" for some time before it is run off.

If good raw sugar is being refined, it is not necessary for it to remain in contact with the char for a longer period than the time requisite for its passage through the cistern, which is from 3 to 6 hours, the time varying with the depth and degree of fineness of the char and other circumstances. The liquor is run off in a steady even stream, the speed of the flow being so adjusted as to leave the liquor sufficiently long in contact with the char to utilise its full decolorising effect. As the liquor runs away, it is replaced by more raw liquor, until the increasing colour of the refined liquor indicates that it is no longer advisable to run on more. When this point is reached, the raw liquor is replaced by water at nearly the boiling-point, which forces out the liquor in front of it. The liquor, as it leaves the cistern, is usually divided into different qualities according to its colour and the analysis of the raw sugar from which it is made, and these are employed in the production of white, nearly white, and yellow, refined products. Sometimes, and particularly in refineries where sugar of a uniform high grade is melted, the whole of the liquor is mixed together and boiled into one quality, such as loaves or crystals. The last portion of the

liquor running from the char is reduced in gravity, owing to its admixture with water, and becomes cloudy and grey, and on this account has to be kept separate from the liquor, and it is therefore run into a tank by itself. This sweet water, which contains organic and saline impurities derived from the raw sugar, is known as char-water, and is either used for dissolving sugar or is boiled into a low kind of sugar, which is again refined. When by means of a hydrometer, it is ascertained that the amount of sugar present will no longer pay for recovery, the washings are run to the drain. The washing, however, is continued for many hours longer so as to remove as far as is economically possible the impurities which have been absorbed by the charcoal. The quantity of water employed in the operation of washing may be roughly stated as being from once to twice the weight of the charcoal. The cost of the water, the quality of raw sugar melted, and the degree of fineness of the charcoal, influence the refiner to a considerable extent in deciding upon what is the best quantity to use. If water is dear and charcoal cheap, it is certainly better to replace the latter more frequently, and save the extra cost of doing so by washing less freely. Hawley's water heater is particularly well adapted for heating up the large quantities of water required to a few degrees above boiling point. This temperature is obtained by fitting to the discharge a vertical pipe giving a head of water to balance the pressure of about 4 lb. per square inch in the vessel, so that the temperature at discharge is at the boiling point. In Fig. 183, A is a piston regulating the steam supply, which is effected by the pressure of steam inside the vessel acting on the piston, forcing it up and shutting off the supply in case of an excess of pressure. The weight B maintains the balance at normal pressure; C are the heating nozzles; D, the steam inlet pipe; E, the equilibrium valve on the steam inlet; H, the perforated water inlet pipe; J, the safety-valve, set for 5 lb. per square inch; and P, the float

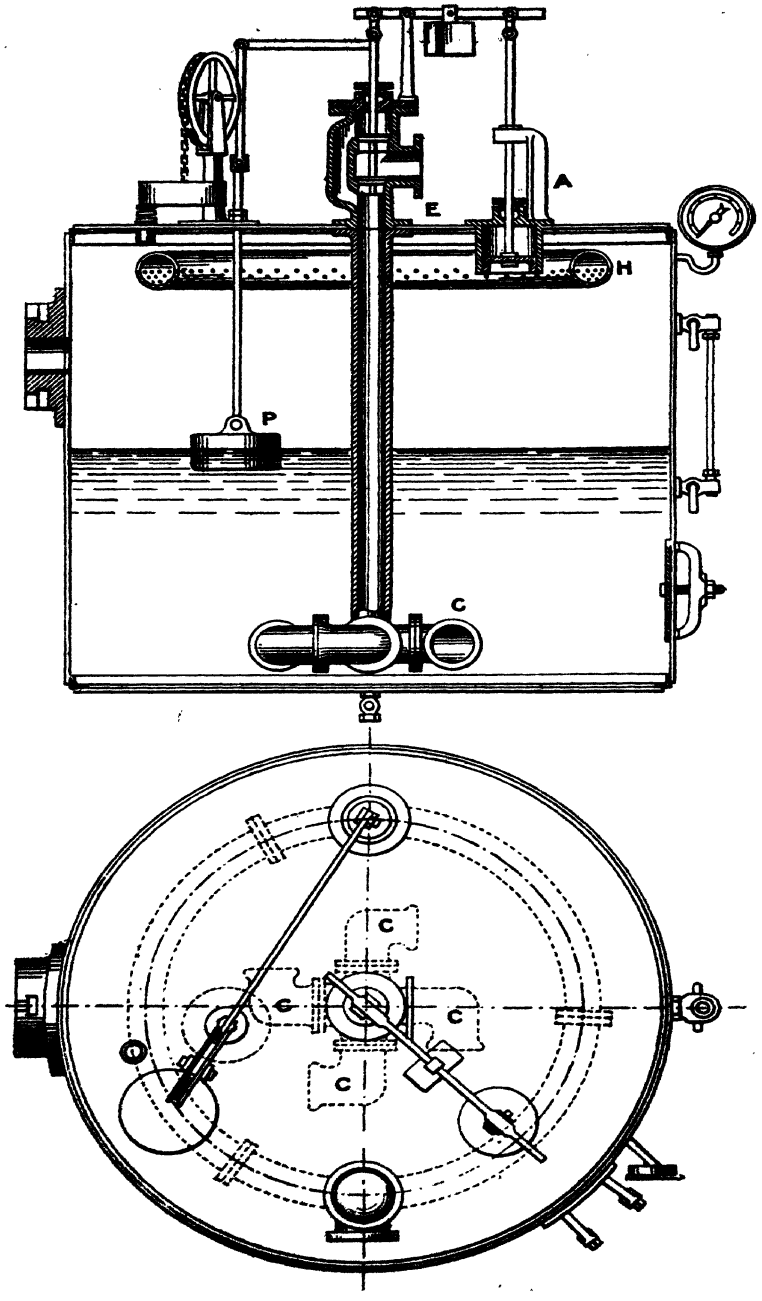

FIG. 182.—HAWLEY'S WATER-HEATER.

regulating the water level. To regulate the washing operation it is advisable to run a fixed quantity of hot water on each cistern. Oxalate of ammonia, soda, and other reagents capable of precipitating the lime, or iron, which are always present in the washings, are used as rough tests of the efficiency of the washing. If the total solid matter in the last washings is similar to the amount in the water employed, this will indicate that the operation has been carried as far as it can be. Such a result is only practically attainable where water and the fuel for heating it cost little, and one has generally to be content with far less perfect results. The quantity of liquor that can be economically dealt with by the char is usually in this country about twice the weight of the latter, but the amount depends in a great measure upon the quality of the raw sugar from which it is made, and the nature of the after processes of refining adopted. For example, in loaf-sugar refineries the purification is to a considerable extent the result of an after process of washing, or liquoring, so that in some refineries on the Continent only about one third of the quantity of char we have mentioned is required. The use of a large quantity of char, while it results in a gain in the colour of the products, also increases the loss of sugar. Char cisterns are sometimes worked in sets of two or even three, the liquor in such cases being passed through the cisterns in succession, and when the first one is exhausted, the liquor is turned on the second, and another freshly filled cistern is added to the set. This method of working secures the full decolorising effect of the charcoal, but on account of the length of time necessary for the passage of the liquor through the increased depth, the liquor has a tendency to become sour. The cisterns are also sometimes worked in pairs, both being washed off after the liquor has run through them.

The washing process having terminated, the char is removed from the cistern through the lower manhole, and is usually conveyed by means of hanging-trucks travelling on

rails, or by conveying vans, to the top of the kilns, the latter being generally placed in a separate building, though in some refineries they are immediately under the charcoal cisterns.

Revivification of Char.—Various processes have been devised at different times for revivifying the char, that is to say, restoring its power of absorbing colouring matters and other impurities, but the only process in general use in refineries is that of carbonisation. This operation is almost universally conducted in what are known as pipe-kilns, of which various modifications are employed. The apparatus shown in Fig. 184, made by Manlove, Alliott and Co., consists of a brick chamber supported by iron columns, and firmly bound together at the corners by angle-irons, and which are held together by wrought-iron tie rods.

In the front of the kiln near the bottom are two cast-iron plates, which have eyelet holes with movable lids, through which the internal temperature can be observed, and between the plates is a furnace door. There are two banks or groups of vertical carbonising pipes *a a*, each bank consisting of two rows, or of three as shown in drawing. The pipes are constructed of cast-iron, and are of a round, or more often of an oval section. They are kept in place, at the top, by cast-iron distance plates, which close all the intervals between them, and through which they project an inch or two, the space above the plates being filled up with cement to level the top of the pipes so as to prevent the char from leaking through. The bottoms of the pipes rest on collars cast on the bed-plate, and in the centre of each of these collars is a hole which serves to communicate with a sheet-iron cooling pipe or "cooler" *b* fixed to the bottom of the bed plate. Two slide-valves *c c* at about a foot apart are placed at the lower end of each row of coolers. The slide-valves are formed of one strip of metal for each row of pipes, and perforated with a number of holes corresponding with that of the

pipes. Between the beds of carbonising pipes is a central fire, the heat from which plays around the pipes, the products of combustion passing away to the chimney through flues.

In the United States it is customary to utilise the waste heat of the gases on their way to the chimney for removing

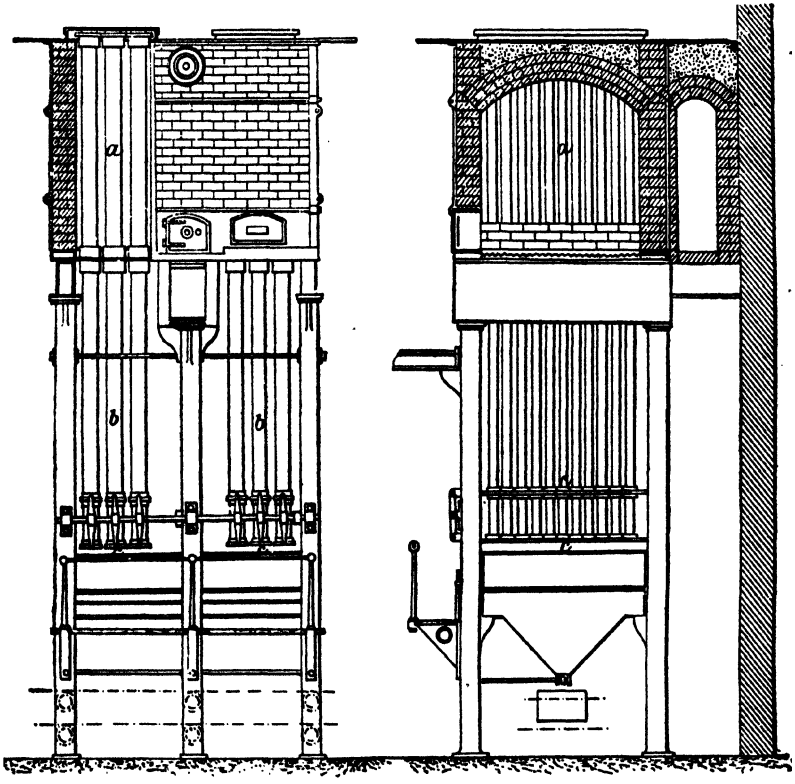

FIG. 184.—MANLOVE, ALLIOTT AND CO.'S CHAR KILN.

the water which the wet char contains previous to its passing into the kiln-pipes. The apparatus which is employed for this purpose is placed between two beds of retorts immediately over the fire, and it is raised sufficiently high to allow the char, after being dried, to run on to the mouths of the pipes.

There are two forms of this apparatus which are generally used :—

(1) *The Colwell Drier.*—This consists of a long sheet-iron box extending the whole length of the pipe bed, and containing pipes ranged in rows one above the other, and made in the form of a Gothic arch, with the apex upwards. The heated gases pass through the pipes, and the char which runs down between them is in this way dried, the steam escaping through passages formed underneath the flue pipes by a prolongation of their sides, the removal of the steam being assisted by currents of fresh air.

(2) *The Farley Drier.*—This consists of an A-shaped chamber divided longitudinally so as to cause the gases to pass backwards and forwards several times before they reach the chimney. The char is placed in a hopper at the top of the drier, and falls through slits extending the length of the drier down the outside of the latter. The char is loosely held up against the sides of the drier by means of an iron louvre arrangement. A successful modification of this drier, designed by R. Deeley and Co., New York, is shown in Fig. 185. The outside plates are made zigzag, and mechanical arrangements are provided for altering the incline of the louvre plates so as to regulate the flow of the char. The drawing shows transverse and longitudinal elevations in section. The construction of the apparatus is explained by the drawing, but it may be mentioned that the gases pass through two openings at the bottom and find their way out at the opening in the side near the top.

Buchanan and Vickess's Kiln (Fig. 186).—This kiln, designed by James Buchanan and Co., of Liverpool, has now, to a great extent, replaced the ordinary pipe kilns, and combines in itself several most important advantages over the latter. It contains 22 pipe retorts, each 12 inches in diameter and 9 feet 6 inches long, and these are provided with internal vapour pipes of a smaller diameter. The vapour pipes are

perforated with holes, over each of which is placed a shield or louvre, which serves the double purpose of preventing the char occupying the annular space between the pipes from escaping into the interior pipe, and at the same time alters the direction of the char, thereby giving the whole of it an equal chance of being heated to the same extent.

There are drying-pipes connected with the top of the retort-pipes, and those also have perforated escape-pipes, connected with steam-collecting boxes having outlets and shut-down air-tight valves, with pipes to conduct vapour out-

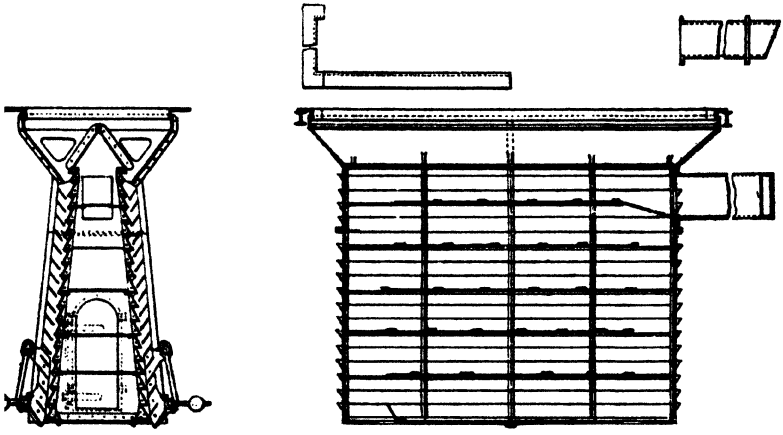

FIG. 185.—DEELEY'S CHAR DRIER.

side the building, or into a condensed apparatus, or over a fuel furnace as may be arranged. In the latest form of these kilns, two hoppers are placed on the kiln head, holding a large quantity of char which runs on to a false top-plate with bevel sides. These plates have an air space underneath to keep them cool, and prevent injury to the char. The char descends by gravitation only through the drying-pipes, then into the retort-pipes, where it is revivified. It then enters the coolers, of which there are 7 or 8 to each retort-pipe, having a large cooling surface. From the coolers the char falls into

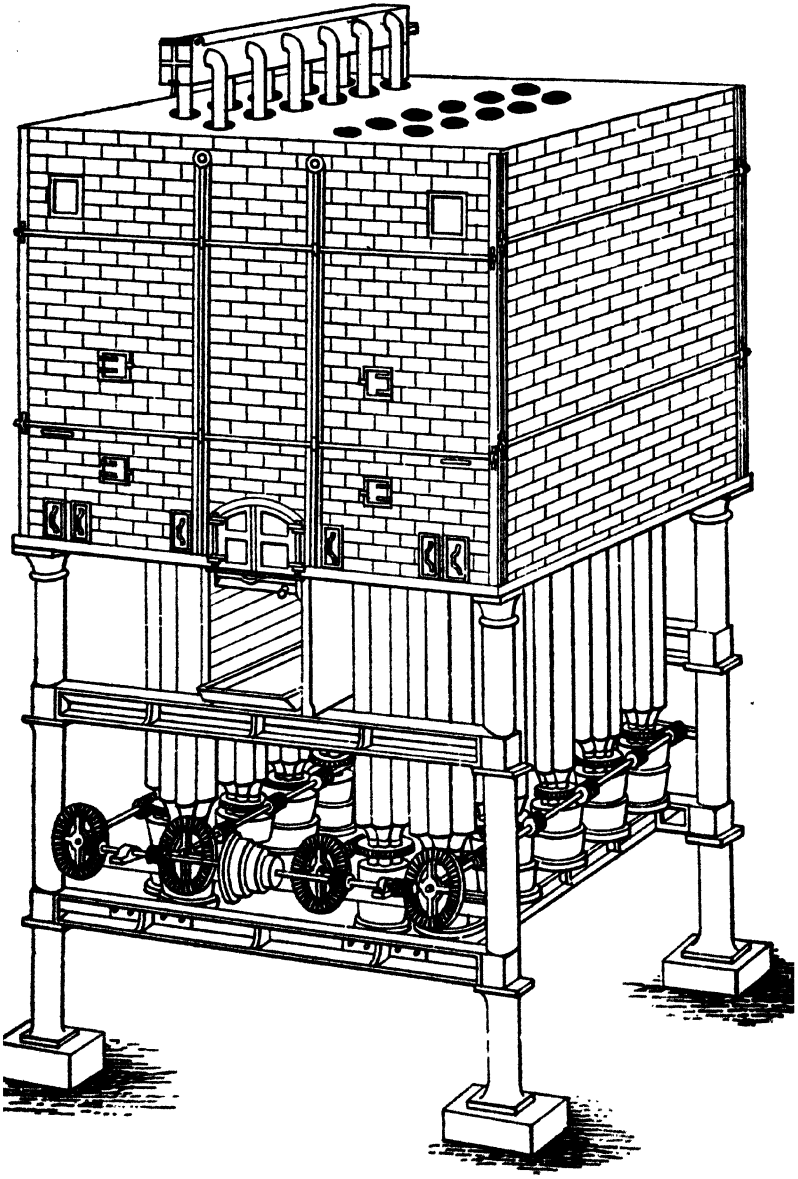

FIG. 186.—BUCHANAN AND VICKESS'S KILN.

a conducting box, then into a measuring box, and by the latter measured quantities of char are discharged at regular intervals of time, the speed, which can be varied as required, governing the quantity; this is regulated so as to give the best results in the subsequent clarifying operation. Each set of drying-pipes, retorts, internal pipes, and coolers, are all connected together, and carried by a spindle running in a footstep, revolving on its own axis, the average speed being one revolution in 15 minutes. The revolving of the retort-pipes causes the whole surface to be uniformly exposed to heat, thus giving equally revivified char. The pipes do not bend, as they all expand and elongate to the same extent. The coolers revolve along with the retorts, thus displacing and changing the air surrounding them. The apparatus is automatic in all its operations, and with the latest arrangements for bringing the dirty char to the kiln heads and conveying the revivified char away from the hopper below, works in a satisfactory manner. A very large plant can be worked with little manual labour. The average temperature in the retort chamber required to revivify the char is about 1050° F. The waste gases enter the drying chamber about 750° F., and leave it about 400° F. The quantity of char revivified by one kiln in 24 hours differs with the class of sugar used and other conditions, but in an average refinery it may be taken at 20 tons, although this quantity has been exceeded.

In the engraving one of the steam-collecting boxes is left out in order to show the position of the retort pipes.

Weinrich's Char Process.—For the renovation of spent animal charcoal as distinguished from the ordinary revivification, Weinrich patented a process in 1894 by which the spent char is caused to pass slowly through a slightly-inclined revolving iron drum whilst a current of air, heated to the required temperature, is drawn through the drum in the opposite direction. In this way, any excess of carbon taken up during use, can be burned off quite easily, at a temperature

below a red heat, without affecting the original carbon of the char, whereby the char is again rendered porous and its decolorising power greatly increased. The proper temperature of the char, as it issues from the drum, should be such that a portion caught on a piece of paper should char the paper without burning through it. The temperature is 300°–400° C.

This process is now extensively used especially in those refineries where the percentage of carbon has a tendency to rise.

In some refineries the heat produced by the combustion of the carbon is sufficient to maintain the required temperature from day to day without further consumption of fuel.

The char after having passed through the drier E, which is heated by the waste gases, enters the revivifier consisting of a slowly-revolving corrugated drum A, resting upon heavy bearings and rollers. The drum is encased in brickwork, except at the ends where it is encased by hoods. The corrugation is obtained by a number of U-shaped troughs secured to two head-pieces and an iron framework connecting these head-pieces. By this arrangement there are no rivets exposed to the fire or the heating gases. Beneath the feed end of the drum is placed the furnace M. The fire and gases from the furnace, heat the exterior of the drum, and the gases then pass through the preliminary drier E. The char dropping from the drier into the drum is heated up at once, and alternately lifted and dropped by the troughs, acting as buckets. During the revolutions of the inclined drum the char will be advanced slowly towards the lower end, and heated up to the desired temperature, and exposed to a counter current of air. It will then drop into the cooler from which it runs continuously, ready for use again.

An apparatus of 24 feet in length and 4 feet diameter will revivify in 24 hours from 37 to 43 tons of char containing 15 to 17 per cent. of moisture as it enters the drum, the consumption of coal being about 1 ton.

Boiling down.—After the liquor leaves the charcoal, the sugar has to be recrystallised out, and this is effected mainly in the vacuum-pan. Several modifications of this important

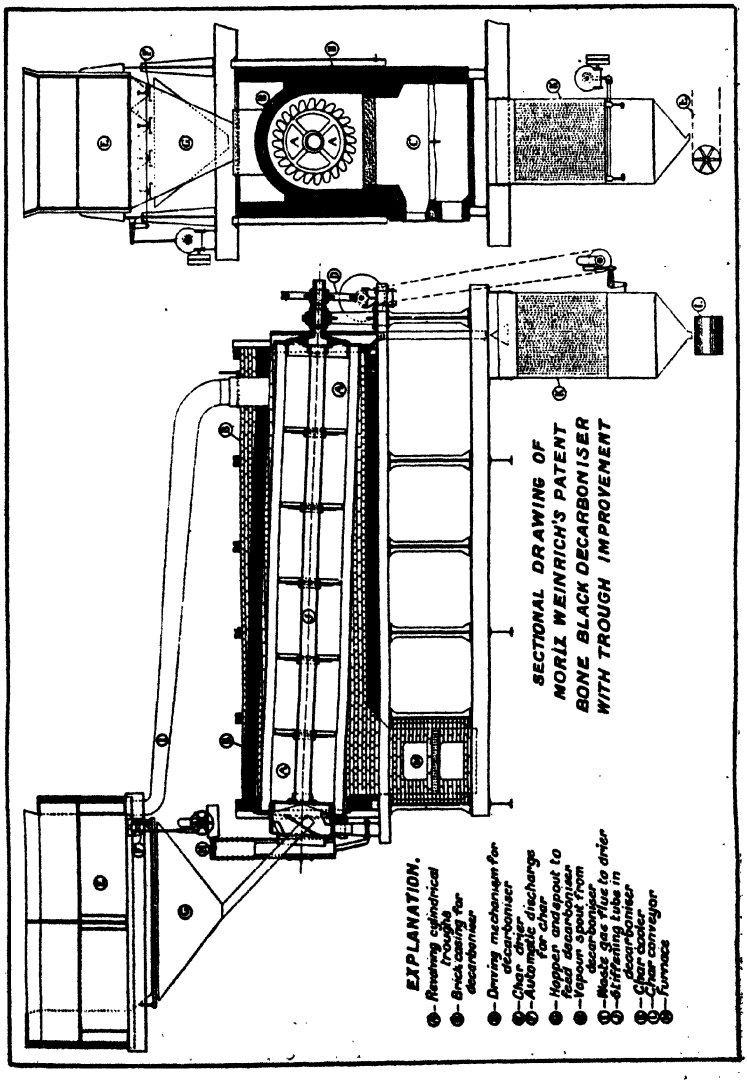

FIG. 187.

apparatus having been already described, of which some are similar to those in use in refineries, it will simply be necessary to refer the reader to this description. Vacuum-pans are usually worked singly in refineries, though in a few cases a triple effect apparatus, such as that invented by Yaryan or Lillie, is used for the evaporation of liquor to a higher density before it is boiled in the ordinary pan, or for the concentration of char water. The mode of boiling varies considerably with the quality of the liquor and the kind of refined sugar to be produced. In all cases, however, a vacuum is first created in the pan, and a sufficient quantity of liquor is sucked in to at least cover the bottom worm, and steam is then turned on to the latter and the liquor is concentrated and becomes a supersaturated solution. The exact point to which the concentration should be carried is decided by an experienced workman, who, by repeated examination of small portions of the contents of the pan, extracted by means of a proof-stick, can by drawing a drop between his finger and thumb tell the exact degree of viscosity necessary for the immediate production of grain. When this point is reached, a small additional quantity of liquor is run in, which disturbs the equilibrium, and causes some of the sugar to crystallise out of the supersaturated solution. More liquor, in successive charges, is then run in, and the crystals gradually grow in size, until the pan is full. As the contents of the pan rise above the worms, the steam is turned on to them in succession. In the case of crystals, the boiling, after the production of the grain, is very slow, and the temperature is as high as 190° F., and it is customary when the pan is full, to discharge a large portion of its contents, leaving, however, a quantity behind to be reboiled with fresh liquor into larger crystals; and this operation is repeated three or four times, producing each time larger and larger crystals, until they are as large as needed, when the whole contents of the pan are discharged. Each portion of the contents of the pan so

discharged is called a "cutting," and the final panful is called the "steam out," from the fact that the pan is then steamed to remove adhering sugar. The time required for boiling up to the first cutting is usually about six hours, and each succeeding cutting takes about two hours. Small refined or beet crystals are sometimes introduced into the pan with sufficient liquor to cover the worms, and the pan is then boiled in the usual way, except that it is unnecessary to boil down to grain or at so high a temperature. By this mode of working, economy is effected in time, and the crystals resulting from the first cutting are as large as those from the third cutting when boiling from liquor in the ordinary manner.

In boiling crystals great care must be taken to obtain distinct, well-formed grain, otherwise the resulting crystals will have an irregular appearance. If the grain is not well formed, it must be redissolved by the addition of more liquor or water, and boiled out again. Care must be taken after the grain has formed not to destroy it by letting in too large a quantity of liquor at a time. Soft sugars, such as yellow or white pieces, are boiled at a low heat, from 115° to 140° F., and in boiling down to form grain a much larger quantity of liquor is taken into the pan so as to form a larger quantity of grain, and the pan is fed with liquor and boiled off more rapidly than in the case of crystals. The time needed for boiling a panful of fairly good quality of pieces does not exceed three hours. In the case of granulated and loaf sugar, the operation is much the same, but the temperature employed is higher, as it is desireable to render the *massecuite* as free-running as possible. The vacuum is sometimes lowered just before the pan is let go, so as to increase the temperature with the same object.

CURING.

The *massecuite* from the vacuum-pan is run into a receiver termed a "heater," because it is sometimes steam-jacketed. This vessel, which is usually provided with stirring gear, is cylindrical with a hemispherical bottom, but in some cases, where over-driven centrifugal machines are employed, it is made in the form of a trough, from the sides of which the baskets of the machines hang.

The *massecuite* is next discharged from the heater into a centrifugal machine in which the sugar is separated from the syrup by drainage, and sometimes further purified by washing either with water or liquor.

Old Methods. Crystallisation in Motion.—During recent years a number of processes have been devised for the extraction of all the sugar obtainable from the massecuite by means of simple crystallisation. The most notable and successful amongst these has been that of Stammer and Bock now generally known as "crystallisation in motion." The apparatus employed in this process consists of jacketed cylindrical vessels either fitted with stirring gear, or constructed to revolve upon friction-wheel bearings, the jacketed shell being supplied with means of either heating by steam or cooling by water so that the temperature of the contents of the vessel may be exactly regulated. The capacity of the crystalliser should equal the strike of the pan from which it is to be filled and a number of these vessels are usually placed upon a floor immediately under the pan. The principle involved in the process is that of prolonging the time during which the conditions most favourable to crystallisations, such as a proper temperature and a continuous gentle motion in the mass, are maintained. In some cases a certain quantity of dry crystallised sugar is added at the commencement of the operation, a very slow motion not exceeding two revolutions per minute is

employed and is continued for three days during which time the temperature is gradually reduced until it becomes normal. By this method the greater portion of the crystallisable sugar is obtained at one operation.

In the United States a cheap form of machine for effecting the same object is being used. This consists of a non-jacketed cylindrical vessel placed horizontally and heated by a series of steam pipes underneath. The heated air from these pipes is caused to impinge on the surface of the crystalliser by a sheet-iron or brick casing.

Bergreen has patented in France an improvement in the process of crystallisation in movement, which consists in the withdrawal, through a wire gauze covered opening, of a part of the syrup in the massecuite and its reheating and return to the crystallisers. This plan of working is stated to result in the formation of larger crystals than those obtainable in the ordinary way.

Bock proposes also in a recent French patent to break up sugar crystals by means of a suitable machine (provided with graded sieves) into small particles and then to add these to syrups boiled to the right density in the crystallisers. He states that by the means of his machine the broken crystals are left with sharp angles and sides and after growing in the crystallisers this form is preserved.

Knoop in a recent French patent describes a new form of apparatus to be employed in the same process. This consists of a jacketed cylindrical vessel placed in a vertical position and having a conical bottom terminating in an opening closed by a sluice valve. A vertical shaft driven from above is provided, having at its lower end a number of arms which agitate the massecuite, and at the conical bottom, scrapers, which serve the double purpose of preventing the crystals from settling, and of ensuring the complete discharge of the contents, when the valve is opened. In the upper part of the jacket is a steam worm by means of which the massecuite can be

heated. The lower part of the jacket is separated from the upper part by a division and through the former water can be circulated with the object of keeping the massecuite at the desired temperature.

Crystallisation in motion is applicable to good or medium grain down to 75 per cent. low sugars. If the grain is too fine it should be remelted and reboiled to grain. Inferior syrup called mixing syrup is mixed with the raw sugar and drawn into the pan and boiled up. It is then let down into the crystallisers and kept in motion for 24 hours until the temperature has fallen to the desired point, when it may be run into the washing tanks for the Steffen process, if desired. Washing takes a further 24 hours. The small quantity of syrup that drains off is the only by-product. It may be boiled to string proof and left in a crystalliser a few days when it may be separated into a raw sugar and molasses of 54–55 per cent. purity.

In the French patent No. 293043 is given a process for accelerating the formation of sugar crystals by Carl Steffen. The author arranges circulating tubes of large diameter running from the bottom to the surface of the liquid in the crystallising tanks. A current of air is introduced into and near the bottom of each tube in such a manner that the air rises in large bubbles and causes a constant mixing of the contents of the tanks. He claims that a much more rapid and complete crystallisation is obtained by this means.

On the other hand, the French patent No. 293510, for accelerating the crystallisation of syrups by Rath and Bredt, the authors claim, by the addition of 1 per cent. of finely ground sugar to the boiled mass in the crystallisers, to be able to make good massecuite in three-fourths of the ordinary time, and that there is no need for stirring apparatus, so that the operation may be carried out in the ordinary tanks.

In the system of crystallisation adopted by Huch and Lauke the crystallisation is conducted under a vacuum of 68

to 70 cm. Fig. 188 shows this apparatus as made by the Braunschweigische Maschinenbau Anstalt.

Centrifugals.—Several kinds of centrifugal machines, capable of being used both in the factory and the sugar refinery, have been already described under the heads of "Raw sugar," and "Preparatory treatment of raw sugar for refining." It will, therefore, be only necessary to give a detailed description of two forms of centrifugal machines, the Weston and

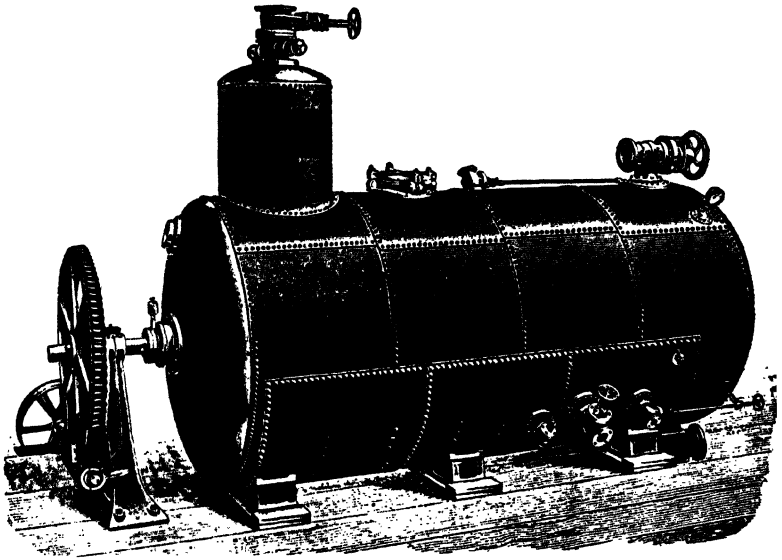

FIG. 188.—HUCH AND LAUKE'S VACUUM MIXER.

the Hepworth, as owing to the advantages they possess over other machines, they are rapidly displacing the latter.

The speed at which a centrifugal machine may be safely driven varies with the diameter of the basket, from about 500 revolutions in the case of a 6-ft. basket to about 1200 with a basket of half that diameter. Large machines are most suitable for drying crystals and high-class sugars, and small machines for dealing with lower qualities. The amount

of sugar dried in each operation depends upon the size of the machine (and to some extent, with the quality of the *massecuite*) from 2 to 8 cwt. The time required for machining a charge varies from two to three minutes in the case of crystal *massecuite* to sometimes as much as half an hour with the lower qualities. With white sugar, such as "crystals" or "granulated," it is usual to wash the sugar from which the syrup has been driven out, whilst it is still being machined with water or liquor, applied through a rose attached either to a watering can or to a rubber pipe. The sugar is then blued by means of a small quantity of ultramarine suspended in water, or by a soluble blue, to satisfy the fancy of consumers.

The *massecuite* is conveyed from the heaters to the machines either by means of small iron trucks, each holding enough for one charge (travelling on an overhanging rail), and which can be easily emptied by a sliding valve, or, as in the Hepworth and Weston machines, which are suspended from a trough-shaped heater, by means of discharge valves, one of which is placed over each machine.

The machines were formerly discharged over the side, but of late years openings with movable lids have been provided in the bottom of the basket with corresponding openings in the bottom of the outer casing, through which the sugar is emptied on to travelling bands, which convey the sugar to floors where it is mixed previous to being packed.

Many inventors in past years have devised self-discharging centrifugals to work continuously, and one of the best known and most widely employed, was patented by Duncan Stewart, of Glasgow. The drum of his machine was conical in shape, and was mounted on a horizontal shaft. The massecuite was fed into the narrow end, and forced to travel to the wide end by means of a screw conveyer which moved in the same direction as the drum, but at a slightly greater speed. This machine did not find favour with refiners as it ground the surface of the crystals and produced a dull product.

Quite recently Portemout has obtained a French patent for a centrifugal of similar construction.

Weston's Centrifugal Machine.—There are two types of this machine, one in which the basket is suspended and over-driven, and the other in which it is under-driven.

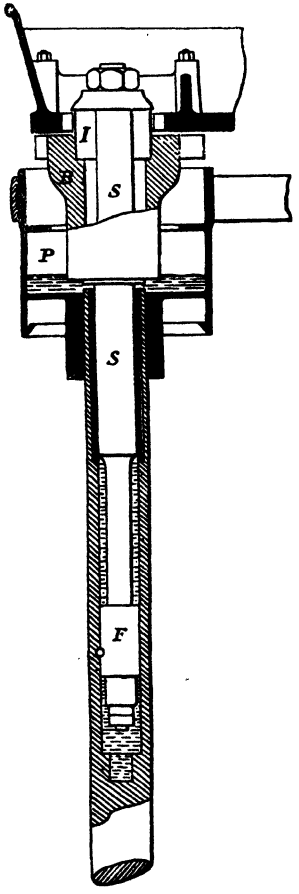

FIG. 189.—WESTON'S CENTRIFUGAL.

The following description relates to the former of these, which has come into general use: In this machine the basket is allowed a certain freedom of movement by means of the use of elastic bearings, from which the spindle supporting it is hung. When there is an inequality in the load, the basket can swing in an irregular way until the velocity of its revolutions causes the oscillations to become less and less till they finally disappear. The means by which this oscillation is at once permitted and controlled may be explained by reference to Fig. 189, which shows, partly in section, a basket spindle, with its driving pulley, suspending block, etc. B is a strong bracket or block firmly bolted to the overhead beam. I is an elastic buffer resting on the block B, and S is a steel spindle suspended by means of the top nut and washer from the elastic buffer. This spindle is itself stationary, but is fitted at the bottom with a special form of revolving bearing F, and is enclosed by an outer spindle attached in a simple manner to the revolving bearing. The

outer spindle has fixed upon it at the top the pulley P, the lower part of which also forms the brake block. The basket is attached to the bottom of the outer spindle. The elastic buffer I permits, and at the same time controls, the oscillation of the basket. Whenever there is an unequal load there is necessarily, in every form of centrifugal, a tendency on the part of the basket to oscillate, and instead of wasting power, and setting up severe strains by trying to restrain this tendency, and to hold the basket to a fixed centre, the basket in the "Weston" machine is allowed entire freedom within the limits required by practice and under the control of the elastic buffer. Vibration in the framing of the machine, or in the floor upon which it rests, is thus prevented by this simple and most efficient expedient.

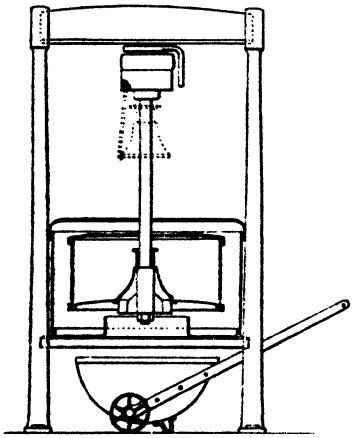

FIG. 190.—EMPTYING WESTON'S CENTRIFUGAL.

The hollow portion of the outer spindle constitutes an oil chamber, so that the revolving bearing F, which is the principal bearing of the machine, simply runs in a bath of oil, and is therefore lubricated as long as the bath is maintained.

The provision made for emptying the basket will be readily understood by reference to the illustration (Fig. 190) which is an outline view, partly in section, of a 30-inch suspended machine. It will be seen that the basket bottom is formed with a central opening, which is closed by the conical cover whilst the basket is being charged, so that no syrup or undried material can pass through. When the dried sugar is to be discharged, the conical cover is lifted into the position shown

by dotted lines, and suspended by a light rod or chain from the brake pulley. The wall of sugar is then broken down, and easily and quickly swept through the central opening and delivered on to a band or into a handbarrow, as shown in the illustration.

The machine is started by a friction pulley which is placed on the countershaft and drives on to the pulley on the basket spindle. It consists of a pulley which runs loose upon the shaft (and may therefore stand, when the shaft is revolving), and a pair of friction arms firmly secured to the shaft, and so constructed that they may expand a little radially when in motion, and thus bind themselves against the inside of the rim of the pulley. When the shaft is revolving, and it is desired to start the pulley, two small wedges are withdrawn by a hand lever. This allows the friction arms to expand by centrifugal action against the inside of the rim of the pulley, and thus to carry the latter gradually round with them as quickly as may be desired, bringing the cage up to full speed without any shifting or slipping of the belt, and without throwing any sudden strain upon it or on any part of the machine.

When it is desired to stop the machine the wedges are pushed home, and the power being thus instantly withdrawn, the brake may be applied and the machine brought to rest in a few seconds.

The improved form of buffer needs no adjustment as in the earlier forms since the weight of the centrifugal itself is sufficient to maintain the pressure on the rubber buffer necessary for the proper running of the centrifugal at all times, even though the buffers may become worn. Further, as the lines generating the conical buffer do not pass through the centre of oscillation, but much lower down, there is far greater control over the oscillation than was hitherto possible. In Fig. 191 this form of buffer is shown in conjunction with ball-bearing and a solid spindle in one piece.

These machines are made in this country by Watson Laidlaw and Co., of Glasgow.

The Hepworth Suspended Centrifugal Machine.—This machine combines some of the advantages of the ordinary

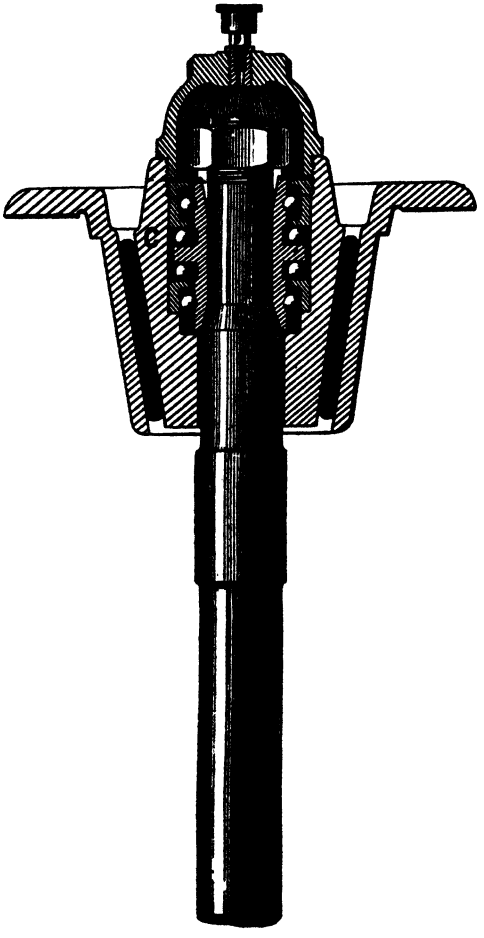

FIG. 191.—WATSON, LAIDLAW AND CO.'S CONICAL BUFFER, WITH BALL BEARINGS.

fixed centrifugal machine with those of the suspended type, and is as independent as the latter of heavy foundations, and

like them may be suspended from a framework or ceiling. In other suspended machines the revolving basket and its spindle are alone suspended while the casing is fixed, but in the Hepworth machine the casing itself is suspended from a single point, and is only prevented from revolving by indiarubber bands, which, while they restrain it from turning, nevertheless allow it to move freely through a certain distance. The revolving basket and spindle are supported in this suspended casing, and are carried in fixed bearings in it. When power is applied, and the machine is used for purging sugar, any uneven loading of the basket will cause not only the cylinder but also the casing and the framing attached to it to swing, and this they can do without imparting undue vibration to the building or framing holding the machine. As in machines in which the basket alone is suspended, the sugar is generally discharged through the bottom of the basket, and sugar so discharged may be received upon a travelling band running below the machine.

In Fig. 192 *a* represents the iron girder (which may form a part of the flooring of the room above) to which the machine is attached, and from which it is suspended; *b* is a bracket bolted to the girder, and having formed within it the cup or socket of a ball-and-socket joint; *c* is the corresponding ball fitted to work easily in the cup or socket, and firmly secured to the bracket *d*, which forms the upper part of the framework of the centrifugal. This bracket *d* is so formed as to contain the upper bearing *e* of the revolving spindle *f* of the centrifugal, and also a supply of oil or other lubricant. It also holds three side rods *g*, by means of which the upper part *d* of the framework of the centrifugal is secured to the casing *h*, which forms the lower part of the framework of the machine. This casing carries the bottom bearing *i* of the spindle *f*, and is provided with suitable openings for the sugar to fall through, as it is discharged through the bottom of the revolving basket *k*, and with a suitable syrup outlet *l*. The

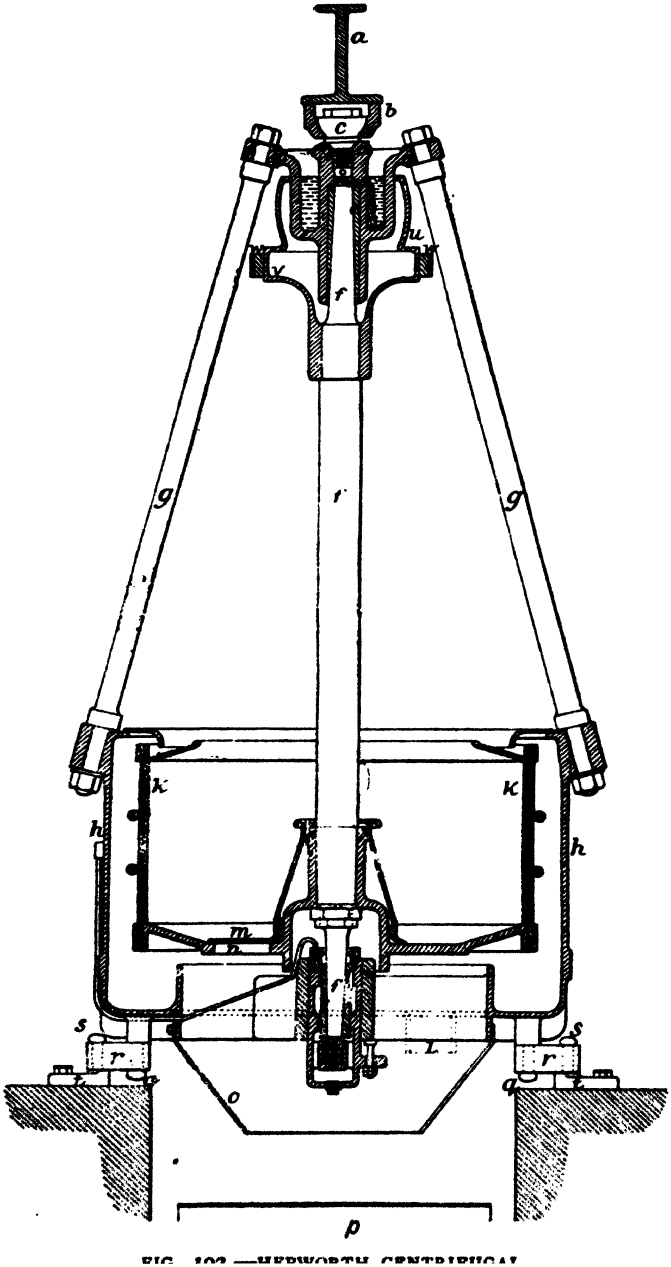

FIG. 102.—HEPWORTH CENTRIFUGAL

basket *k* is securely attached to the spindle *f*, and may be of any usual construction, but is generally made of the form shown. The valve *m* is arranged to rest upon the bottom of the centrifugal, and to partially revolve upon the spindle, so that in one position it closes the apertures *n*, while, when partially revolved, it leaves them open for the discharge of the sugar. *o* is a light funnel to catch the sugar as it drops through the bottom of the casing, and to guide it on to the travelling band *p*. The projections *q* are secured firmly to the casing *h* of the centrifugal, and the indiarubber bands *r* pass around them, and also around the projections *s* secured firmly in brackets *t*, which are attached to the floor. *u* is the driving pulley of the machine, and is securely keyed to the spindle *f*. *v* is the brake pulley, and *w* the brake. It will be seen that the whole machine swings from the ball-and-socket joint *b* and *c*, and that its swinging is only controlled by its own inertia, and by the indiarubber bands *r* by which it is loosely attached to the brackets *t*, which are secured to the floor.

It is evident that the tendency to vibrate on account of uneven loading will be much less in this machine than in those of ordinary construction, inasmuch as in order to vibrate the whole weight of the casing and framework of the machine has to be moved, as well as the basket itself. It is also manifest that no extent of vibration can cause the revolving basket to come into contact with the casing, as the two vibrate together.

This machine is manufactured by Manlove, Alliott and Co., Nottingham.

Loaf Sugar.—The raw sugar from which loaf sugar is to be made, should be of good quality, and the liquor must be boiled into an even small-grained thick *massecuite* and run into a steam-jacketed heater. The temperature of the mass is raised to from 180° to 190° F., and it is then filled into conical sheet-iron moulds. These are either painted inside or galvanised, and are varnished. The moulds are arranged

for filling in rows with their rims touching one another, so as to afford mutual support. Each mould has a small hole at its lower end, and this is stopped up during the filling operation by means of a wooden spigot or a piece of rag. In some refineries the moulds are taken to the heater, to be filled, on iron trucks, but as a rule the *massecuite* is carried to the moulds in tin vessels specially designed for the purpose. The operation of filling is usually conducted in the basement of the refinery, or as it is termed, the "fill-house." When the sugar has solidified in the moulds to the thickness of about half an inch or so round the rim, the solid part is cut away by means of a tool known as a brushing-off hook, and is mixed well with the liquid in the centre, this being done for the purpose of preventing the crystals from settling out and so rendering the loaf of unequal texture.

The loaves are now allowed to cool and solidify. This takes 8 to 12 hours according to their size and the temperature of the fill-house; they are then removed, preferably on iron trucks, each holding a dozen, to one of the upper floors of the building. These floors are kept at a temperature of from 70° to 90° F. by means of steam pipes, the temperature being varied according to the quality of the raw sugar, fine sugar requiring a lower heat than low sugar. The floors are perforated with rows of holes, for the reception of the tips of the moulds, arranged at such a distance apart that when the moulds are set perfectly upright in them, the rims touch each other, so that the moulds are kept in position. Under the floor are inclined trays for catching the syrup, and these discharge into iron gutters communicating with tanks. The filled moulds, having had their spigots removed, are set on end in the holes in the floor, each pan or filling being kept by itself, and the green syrup is allowed to drain off for some hours. If the loaves do not drain in a satisfactory way, it will be necessary to drive a pointed iron rod up through the orifice to make a clear passage some two or three inches deep,

but if spigots of this length are employed, this is seldom necessary. The surface of the sugar which is soft is then cut away by means of the brushing-off hook to the depth of about an inch. There is in the centre of the face of the loaf a quantity of small-grained sugar, and this must also be cut away or it will impede the passage of the clarifying liquor, and consequently the outside of the loaf will be washed quite clear, while the centre remains brown. In fact, the surface of the loaves must in all cases be made slightly concave to make certain that the loaves will be, when finished, of a uniform whiteness. The sugar removed from the face of the loaves is called "brushings," and is sometimes mixed with liquor or water and replaced again on the top of the loaf, thus serving as a means of equalising the flow of the liquor which is employed in washing the sugar, or it can be purified in a centrifugal machine and used for making white liquor. The white liquor, or as it is sometimes called heavy liquor, must be made of pure sugar, the brushings and broken loaves being suitable for the purpose. Beet sugar purified by means of the Weinrich process will do to make up any deficiency. The liquor is made in the ordinary way, care being taken to have a clean blow-up. It should be made of about 2 parts of sugar to 1 part of water. The char through which it is passed must not be too fine, otherwise the liquor will not pass through readily. After the liquor leaves the char it must be cooled to about the temperature of the floor. The loaves are liquored, as it is called, three or four times, the liquor being applied by means of an indiarubber hose. Each time the sugar is liquored the mould is filled up to the brim, and sufficient time is allowed for the mass to drain before it is again liquored. It is easy to decide if the sugar has been sufficiently liquored by knocking out a few of the loaves, and when this is the case, the face of the sugar is cleaned by means of the tool mentioned before, care being taken to leave it as even as possible, and to avoid cutting away more of the solid

sugar than is absolutely necessary to attain this end. Before the loaves are cleaned or "brushed off" they are loosened from the moulds by giving the rim a slight knock when turned upside down against a wooden block provided for the purpose. The sugar is then liquored again, and after draining for a few hours is placed upon a suction apparatus connected with a vacuum pump, and the last adhering liquor is rapidly removed. The operation of liquoring can be greatly facilitated by the use of a centrifugal machine, and suitable machines for this purpose have been devised by Alb. Fesca and Co., of Berlin, and others. After the sugar has thoroughly drained, it is removed from the moulds and placed on racks in a drying stove heated to about 140° F. These stoves usually extend from the top to the bottom of the building and have doors opening on to each floor. They are best heated by a current of warm air which is kept in motion by means of a fan. It is usual to cover the loaves with paper before drying, but in some refineries they are dried naked. After this operation is complete the sugar is ready for sale. It is impossible to state exactly the time that will be required for each operation in the manufacture of loaf sugar, as it much depends upon the quality of the raw sugar and particularly upon the required size of the grain of the finished product, fine-grained sugars such as are sold on the Continent taking a much longer time to manufacture than the large-grained sugar which finds favour in this country. It may generally be stated however, that the time occupied by the process, from beginning to end, is from 8 days to a fortnight, and that about half of this time is needed for stoving the sugar and about half for cooling and liquoring.

Moulded Cube Sugar.—This kind of sugar is made in the form of slabs or sticks, which are afterwards cut into cubes or tablets. The inventions for this purpose are too numerous to admit of individual detailed description, but as the processes of Langen; Tietz, Selwig and Lange; Duncan and Newlands,

and Walker and Patterson, are in operation upon a manufacturing scale, they are selected for special notice.

Langen's Process.—As at present carried on this process is a combination of the work of several inventors. The construction of Langen's mould is clearly shown in Figs. 193 and 194. It is oblong in shape, is open at the top and bottom, and tapers somewhat from the top to the bottom. Thin divisional plates are inserted in recesses provided in the sides for their reception, and these divide the contents of the mould into

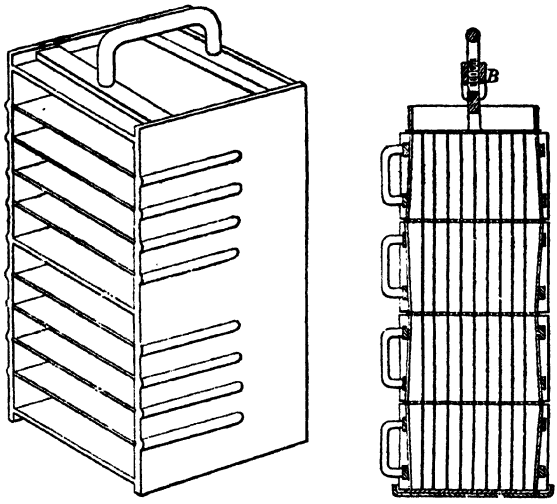

FIGS. 193, 194.—LANGEN'S MOULDS.

slabs of the thickness of the cube sugar. The moulds are placed one on another as shown in Fig. 194. Thin perforated iron plates with their edges covered with a soft material to form a tight joint are inserted between the moulds, and sets of 4 or 6 arranged in this way are placed in rows on an iron truck to which they are tightly attached by means of iron bolts B. The moulds are then filled with *massecuite* and allowed to stand till their contents have set. This mode of filling the moulds is the invention of Matthiessen (English

Patent 1439, 1875). The moulds are then separated, and they are placed in a centrifugal machine in which the green syrup is driven out. The sugar is next liquored in the machine. Many plans of liquoring have been suggested, and one of the most successful is the invention of Elmenhorst (English Patent 4695, 1878), who uses a centrifugal basket having a central liquor chamber connected with a number of rectangular spouts or receptacles, these being hinged at their lower ends so that they can fall back towards the centre of the basket when the latter is at rest, and thus allow of the free admission or withdrawal of the moulds. When the machine is revolving each of the spouts presses against the edges of the mould opposite to it, and the liquor from the central chamber runs through it on to the face of each mould. Langen has patented a similar apparatus (English Patent 3488, 1879) as shown in Figs. 195 and 196. A A are moulds containing sugar. B B are spouts or receptacles through which the clarifying liquor flows into the moulds. Each receptacle has a lip F on one side which overhangs the side of the next receptacle and so prevents any escape of liquor between the moulds. After the sugar has been thoroughly liquored, the moulds are removed, the blocks of sugar are pushed out, and the slabs are placed vertically side by side in iron trays which have small projections at the sides to keep the slabs of sugar upright and apart from each other. The bottoms of the trays are perforated to facilitate the drying operation. The trays are carried on a moving frame through a current of heated air. This mode of drying is also the invention of Langen. After the sugar is dried, it has only to be cut across in two directions to form cubes.

Tietz, Selwig and Lange's Process.—By this process the sugar is formed into slabs, which are washed in vessels of special construction, centrifugal machines being employed to remove the clarifying liquor. The *massecuite* is run into large rectangular oblong moulds, *a* and *b*, Fig. 198, which are

divided by 7 thin cross vertical divisions at a distance apart corresponding with the length of the slabs. Between these

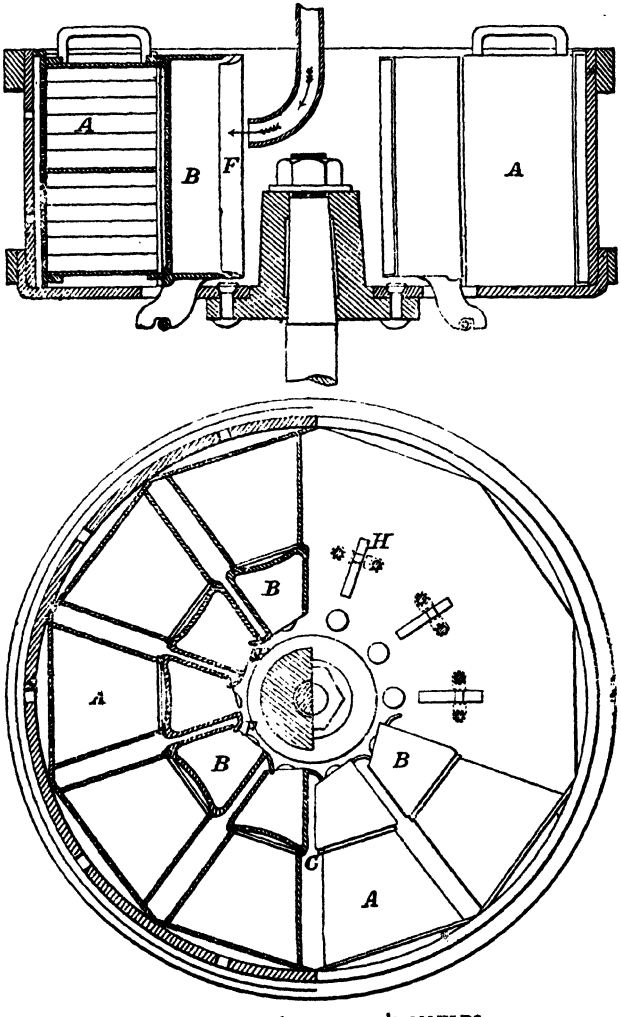

FIGS. 195, 196.—LANGEN'S MOULDS.

cross divisions and supported by them, are small longitudinal plates, having a space between them equal to the thickness of

the slab to be produced. Each mould when filled with *masse-cuite* is allowed to stand for 24 hours, and is then carefully turned upside down upon a table, and the mould is removed, leaving the solidified mass which is divided by the cross plates into 8 easily separable sets of slabs *a a*, Fig. 197. The sets of slabs are then arranged horizontally in iron frames *b*, Fig. 197,

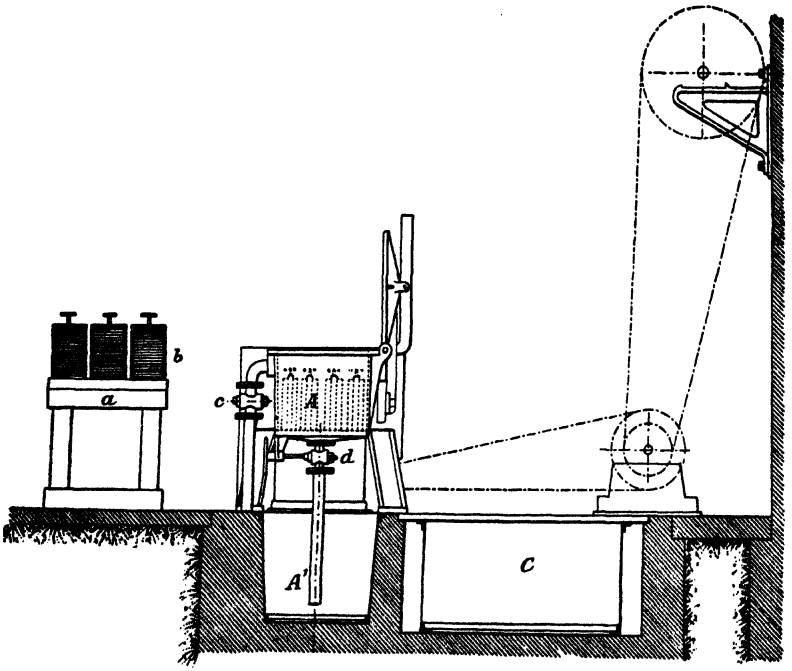

FIG. 197.—TIETZ, SELWIG AND LANGE'S CUBE SUGAR APPARATUS.

and are taken to a centrifugal machine 1, Fig. 198, the basket of which is fitted with 8 perforated plates, against each of which is placed a set of slabs. After being revolved for a short time, the green syrup is expelled, and the sets of slabs are then placed in the vessel *a*, known as an "impregnator." This vessel, which is sufficiently large to hold 8 frames, i.e. the contents of one mould or the charge of a centrifugal machine,

has an air-tight lid which is closed upon the charge being put in. A vacuum is then produced by opening the tap *c* which

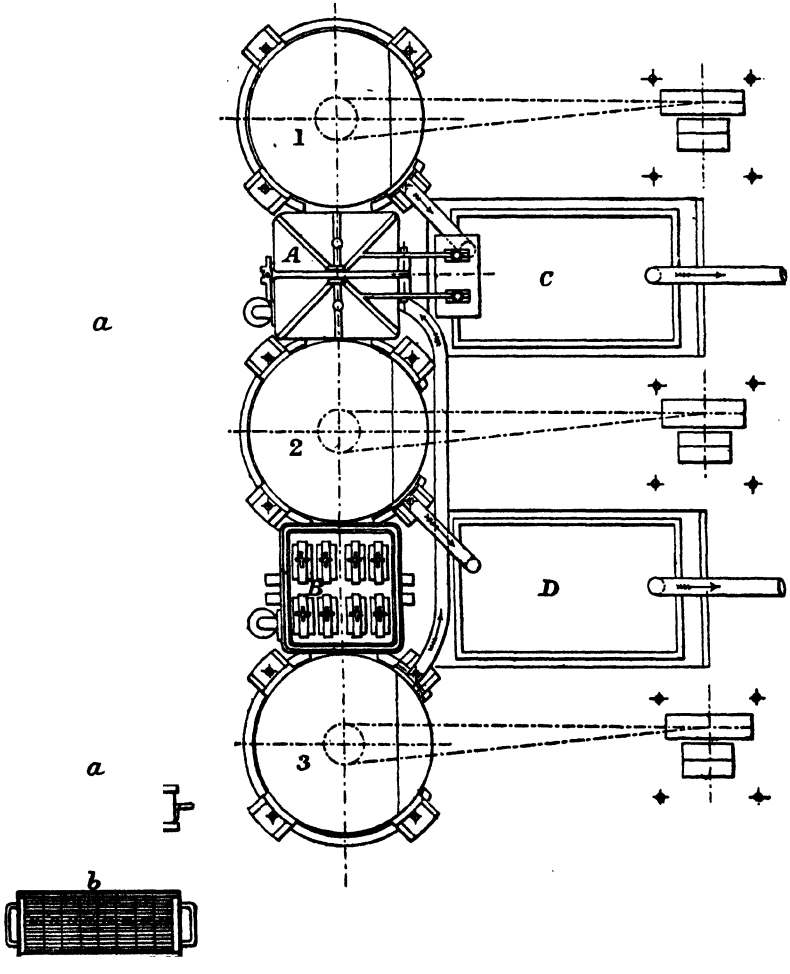

FIG. 198.—TIETZ, SELWIG AND LANGE'S CUBE SUGAR APPARATUS.

communicates with an air pump, and sufficient clarifying liquor to cover the sugar is introduced by the tap *d* from the tank A1. The taps *c* and *d* are then closed, and air is

admitted by another tap, when the pressure of the atmosphere drives the clarifying liquor into the interior of the plates of sugar. The lid is next opened, and the excess of clarifying liquor not absorbed by the sugar is allowed to run back into the tank A1. The frames are then transferred to centrifugal machine 2, by means of which the liquor is removed, and this process of alternately absorbing and discharging the clarifying liquor is repeated once or twice more, till the desired degree of whiteness is attained. On leaving the last centrifugal machine the frames are removed, and the sugar is dried in a stove and cut into cubes. The tanks C and D shown in the drawing are for the clarifying liquor which has been used and the green syrup respectively. The arrangement of the plant as shown in the drawing is from a design by Cail and Co., of Paris.

Duncan and Newlands' Process.—In this process an oblong mould is used. The mould is open at the top and bottom, and has also a movable side. The two ends of the movable side plate are turned over in such a way as to hold a strip of indiarubber, which enables a tight joint to be made when the plate is fixed in its place by means of lugs and screws. The interior of the mould is filled with serrated divisional plates an inch shorter than the walls of the mould, by means of which the contents are divided into sticks. The mode of working is as follows. The serrated plates are inserted in the mould, and the side plate is attached. The mould is then placed on a surface of indiarubber or cotton cloth, which is laid upon a stage or iron truck, to which it is held down by iron bolts. *Massecuite* is then run in, and the filled mould is allowed to remain in a cool place for a sufficient time for its contents to set. It is then placed in a centrifugal machine, the basket of which has an inner lining composed of four perforated flat plates, against each of which two of the moulds are set on their sides, one on another, and the green syrup is removed by centrifugal force. When this is accomplished, the sugar

is either liquored or steamed in the machine, and when thoroughly purified, is taken out of the mould, dried in a stove, and cut into cubes. By this plan of working, raw sugar can be converted into cubes in less than two days from the time of melting.

Walker and Patterson's Cube Sugar Process.—In carrying out this process a mould of a truncated conical form is employed, and a series of flat annular plates are placed in it and retained by a removable cover. The *massecuite* is led into the mould while it is rotating at a moderate velocity, and the centrifugal force causes it to flow in a uniform manner, into the spaces between the annular plates. When the mould is full, a tapered or slightly coned inner shell is moved in to close the ends of the spaces between the plates. When this shell has been fixed in position, the mould is removed from its shaft and placed with its axis vertical in order that its contents may set, when it is again fixed on the shaft for the refining operations. The inner shell is then withdrawn, and the mould is made to rotate at a sufficient velocity to carry off the green syrup. The outer conical shell of the mould is not perforated, so that the syrup cannot pass through it as in an ordinary centrifugal basket, but an outlet is provided for the syrup at its widest end. When the sugar is being drained, the syrup in each space between the annular plates first passes rapidly to the shell of the mould, and then in consequence of the conical form of the shell, which form is given for the purpose, flows along the shell to its larger end, and passes out at the outlet provided at that part into a suitable movable receptacle which is placed on wheels. When the syrup has been thrown off, the operation of liquoring is commenced. A saturated solution of pure sugar is used for liquoring, and may be applied in various ways. Thus it may be poured into the mould while it rotates at full speed, or it may be supplied in separate successive charges, the mould rotating at a moderate speed while receiving each charge and

subsequently being driven at full speed. The application of liquor is repeated as often as may be necessary. Finally the mould is driven at full speed during a time sufficient to completely drain the sugar, and then the mould is taken off the shaft, the annular cover is removed, and the mould is inverted to empty out the sugar and annular plates. The cakes or blocks are then easily separated from the annular plates and dried in the usual manner. The machine is shown in Fig. 199.

Adant's Process.—The various modifications of Adant's centrifugal apparatus enable the manufacture of blocks, slabs,

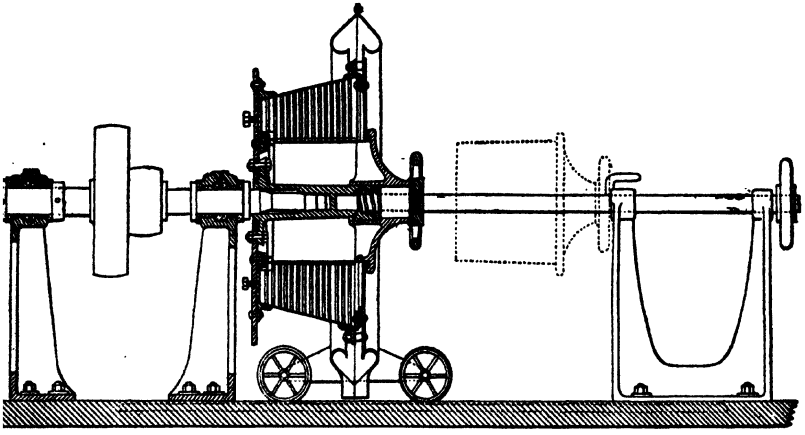

FIG. 199.—WALKER AND PATTERSON'S CUBE SUGAR MACHINE.

or bars of sugar to be effected with greater rapidity and certainty, the removal of the slabs being rendered easier, as they present themselves edgewise in the centrifugal. The drum or cylinder consists of three parts. The lower part fixed on the shaft of the machine, has formed in it a groove designed to receive a rubber packing. The middle part is movable and serves to connect the lower part with the upper part, comprising the pipe or pipes for the liquoring of the sugar. When the working of the sugar is effected by means of steam, the said parts of the drum are replaced as follows. The middle

part is replaced by a truncated cone which forms the body of the new drum or cylinder and the liquor pipe by a steam pipe. The ring by which the casing is fixed upon the drum is provided with a cover completely closing the drum and preventing the escape of steam. The form of a truncated cone is used to equalise the pressure of steam on the upper and lower sugar. The lower part of the drum is pierced with a hole for the outflow of the water arising from the condensation of the steam. Steam is introduced through a pipe leading to two branches bent downwards, so as to allow water to drip away while the steam as it rises again in the drum will pass along the sides of the latter in order to pass above the sides to the chamber wherein the blocks, slabs, or bars are moulded. There are four fixed and four movable wedges, the former being fixed to the lower plate by screws with countersunk heads. An indiarubber ring serves to form a tight joint between the lower annular disc and the drum which is mounted upon the shaft of the turbine. The disc has four holes which receive bolts of the movable wedges, by which bolts the exact position can be determined. The upper annular disc is removable, being held upon the movable fixed wedges by means of thumb nuts and screws. Above the wedges the upper annular disc is pierced with three holes receiving the rods or spindles secured in the wedges in order to enable all the removable parts to be replaced in their original position after mounting and dismounting. Between the wedges this annular disc is pierced with rectangular holes corresponding with funnels for introducing the material into the apparatus. Both discs are provided, between the wedges, with ten grooves serving as guides for an equal number of movable plates placed vertically so as to form nine compartments for nine blocks, slabs or bars between each two wedges. These numbers may, if necessary, be varied.

Provision is made for guiding all the vertical plates, so that they will be at an equal distance from the centre of the circle inscribing them. In the middle of the plates is a distance

piece to prevent the plates from bending, and to keep them the same distance apart throughout their entire length when the apparatus is filled, so that the blocks, etc., shall be of uniform thickness. Two plates are without distance pieces and are placed against the wedges to prevent the sugar adhering to the latter.

The casing is placed in a movable vessel having the same form as the casing, after which the funnels are placed above the eight rectangular orifices. The funnels are fixed to the casing by thumb nuts. When the filling has been effected the funnels are removed and replaced by covers provided with an indiarubber packing to form a tight joint. The covers are secured in the same manner as the funnels.

When the casing has been filled, it is fixed upon the drum by means of the movable annular disc placed at the upper part, and pressure is brought to bear upon it by means of articulated bolts. The disc thus causes the casing to form a tight joint with the bottom of the drum by which the perforated plates are carried.

After the operation the casing is removed from the apparatus and placed upon a table to facilitate the dismounting, which is effected by unscrewing the thumb nuts and removing the upper annular disc, whereupon the movable wedges are removed by causing them to incline towards the exterior. The slabs of sugar and the vertical plates forming the partitions can then be removed. The blocks, slabs, or bars are then conveyed to the drying room.

Adant's centrifugal, although costly, has been in great demand which does not seem to be diminishing, for the refined it produces is excellent and of low density although very hard. The construction appears complicated, but it is really simple, practical and strong, and entails a minimum of expense in working.

In Fig. 200, *a* is the hydraulic crane for serving the centrifugals (1 to 4 in number arranged in a circle); *b*, the centri-

fugal without the internal mould frame ; *c*, the portable filling case (on wheels) with the internal mould frame ; *d*, the internal

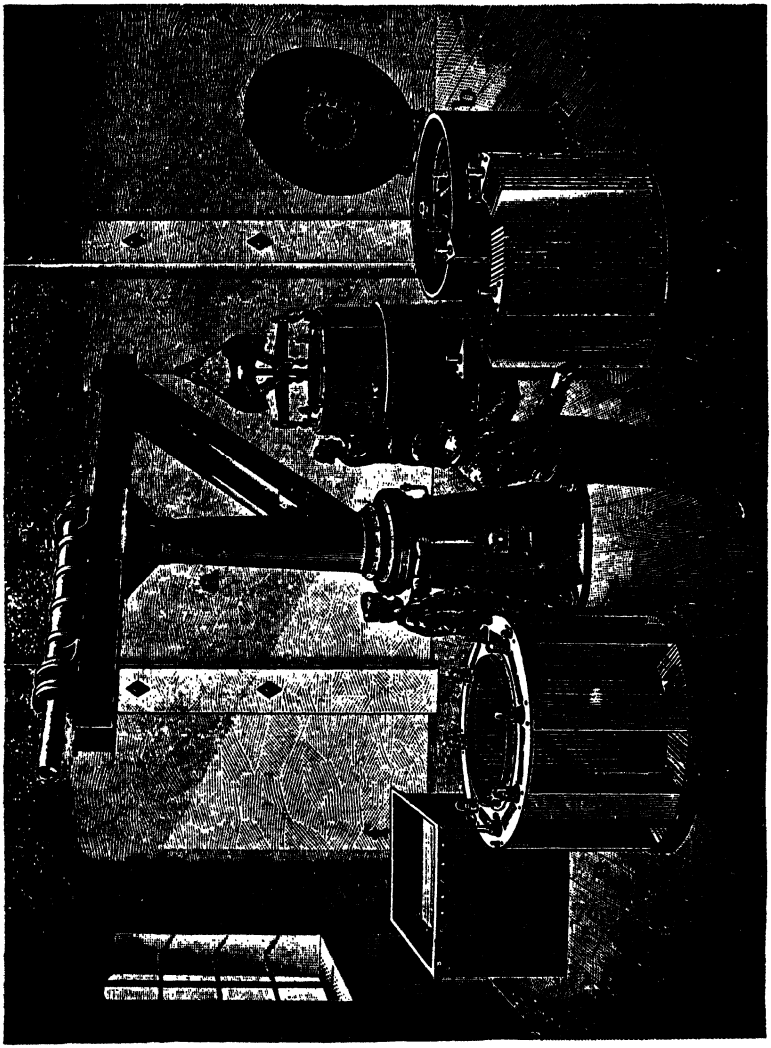

mould frame for the basket, removed full of sugar plates from the centrifugal ; *e*, the platform wagon with the internal

mould frames, which is being fitted with partition plates, after which it will be ready for washing and filling; *f*, the washing tank for sugar moulds, served by the crane or by special lifting tackle.

Pressed Cube Sugar.—An inferior sort of cube sugar is sometimes made from centrifugal granular sugar by pressing it in small moulds of the same shape as the cubes, or in the form of sticks, which are cut into cubes. Hersey's and

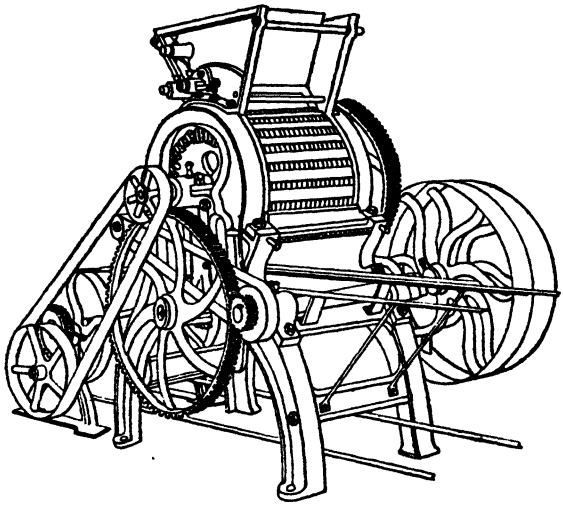

FIG. 201.—HERSEY'S CUBE SUGAR MACHINE.

Jasper and Boushey's machines are largely employed for this purpose in the United States, and turn out cubes direct; Pzillas's machine is used in Europe for the production of sticks.

As these machines are almost the only ones in use, they will be shortly described.

Hersey's Cube Sugar Machine.—In this machine (Fig. 201) moist white sugar can be converted into cubes. The sugar is first liquored and blued in the centrifugal machine; it is then passed through a set of small rolls, on leaving which white liquor is sprinkled over it, and by means of a revolving screw

thoroughly incorporated with it. After this treatment the damp sugar is fed into the hopper of the machine, in which are shafts provided with mixing arms and an inclined packing plate. The bottom of the hopper is formed of the upper surface of the moulding drum. In the periphery of this drum are a number of rows of moulds, each of the size to form one cube. These moulds are open at the top, but are closed at the bottom by means of movable plungers, the position of which is determined by the movement of iron bars, to one of which each row is attached. The bars are caused to advance and retreat radially by means of cams. When a row of moulds is at the top and directly under the hopper, the plungers are withdrawn to their full extent and the sugar is caused by means of the mixing arms and packing plate to fill the moulds. The row of filled moulds then passes behind a strong iron plate curved so as to fit closely to the drum and extending about half way round it. The plungers gradually press the sugar more and more, as it passes behind the plate, until nearly the bottom of it is reached, when the plungers are slightly withdrawn to remove the pressure. After the moulds have passed the plate, the plungers advance to their full extent, and push out the pressed cubes which fall on to metal perforated trays, on which they are arranged in regular rows by a rake, which also at the same time detaches any cubes which may adhere to the moulds. The trays containing the cubes ride on two endless bands to the doors of the stoves (Fig. 202), and when they arrive opposite the stove which has to be filled they are taken off and placed one above the other in racks. The doors of the stove are then closed and hot air is passed through the stove, the sugar being dried in from three to four hours, when it is ready for the market. One machine will press about 28 tons per day. Five men attend to the whole operation from the introduction of the sugar into the hopper to its removal from the stoves. The machine is largely employed in the United States and else-

where, and when suitable sugar is pressed, the cubes leave little to be desired in point of brilliancy and appearance.

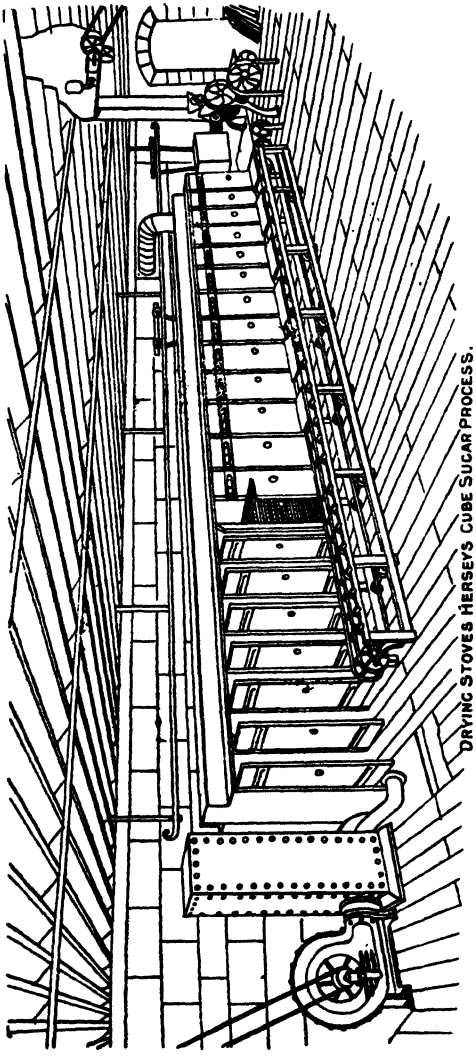

FIG. 202. DRYING STOVES HERSEY'S CUBE SUGAR PROCESS.

The machine is manufactured by Hersey Brothers, South Boston, U.S.A.

Jasper and Boushey's Process.—The apparatus employed in this process consists of a machine by means of which the moist sugar is distributed in the form of a slab of uniform thickness, on a tray or plate, and is then cut and at the same time pressed into cubes, which are afterwards conveyed by a belt, on which they are dried by means of hot air before being

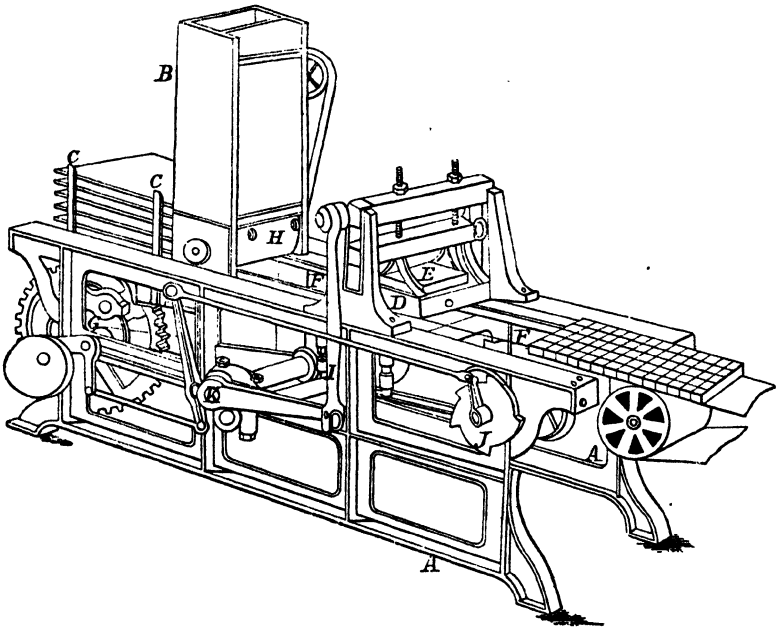

FIG. 203.—JASPER AND BOUSHEY'S CUBE SUGAR PRESS.

handled. Fig. 203 shows a perspective view of the apparatus, and Fig. 204 a sectional elevation.

A A represent the side frames of the machine, in which the shafts and working parts are held; and *a a* the rods that bind and hold them together. B is the feed-box or hopper containing the moist sugar; C, plates or trays which are fed along beneath the hopper to receive the sugar and carry it to the cutting apparatus; D is the cutter-plate; E is the press-plate; and F the endless belt or apron for conveying the trays.

or plates from the feed-box to the cube-forming mechanism, and carrying the finished cubes out of the machine. The mould-plate (Fig. 205) is formed of two sets of blades *b b* crossing each other at right angles so as to include a series of rectangular spaces of the size required for the cubes. The height of these spaces *c c* is made somewhat greater than the width of the cubes to afford room for a series of press-plates *e e*, and to allow also for the compression of the sugar. Each

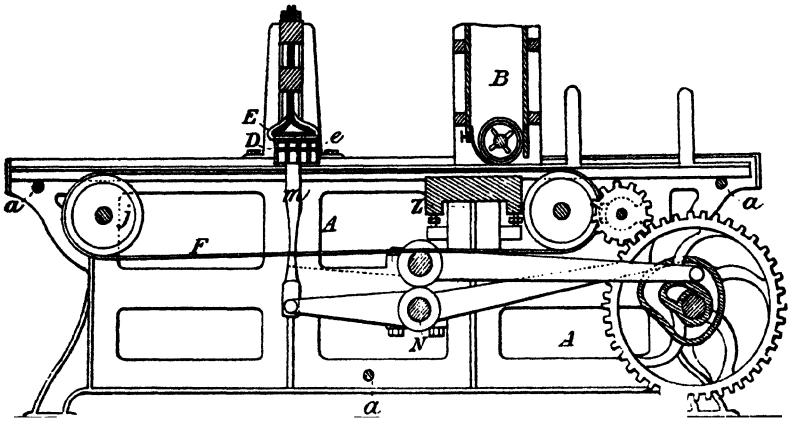

FIG. 204.—JASPER AND BOUSHEY'S CUBE SUGAR PRESS.

space or mould is provided with a press-plate attached to the end of a short vertical rod *f* which passes through a hole in the centre of the top of the mould, and is fixed to the plate E.

The mode of working is as follows: The trays C are carried in a continuous line under the hopper D, where they are covered with an even layer of sugar, and then on the table Z under the mould plate D. In the operation of moulding the blades *b b* pass through the layer of sugar till they come in contact with the surface of the trays, and the press-plates then move down and compress the enclosed sugar to the required extent. The blades are then moved upwards,

and at the same time the press-plates are held down to keep the sugar on the tray and prevent the first upward movement from disturbing it while it is in its moist state. A continued upward movement causes the top of the moulds finally to strike against the plate E, to which the press-plates are fixed, when they both are lifted together above the sugar, and the tray containing the cubes is moved forward a sufficient distance to admit of a repetition of the operation with another trayful. The sugar after being pressed is dried on the plates and packed.

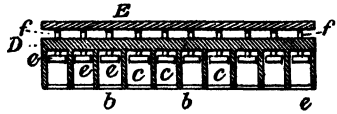

FIG. 205.—MOULD PLATE.

Pzillas's Cube Process.—This is somewhat similar to Hersey's. The machine is formed of a revolving metal drum about $\frac{7}{8}$ of an inch thick, with 18 slots or moulds cut longitudinally through it at equal distances apart. A temporary bottom is formed by an inner half drum which does not move. The moulds are filled as in the case of Hersey's machine, and the outer drum, as it revolves, brings the filled moulds opposite a stamp which compresses the sugar against the inner drum, and the pressed sticks when they reach the bottom are forced out of the moulds by another stamp (acting from the inside) on to boards placed beneath to receive them. The sticks are dried on these boards in a stove, and then cut into cubes by passing them through a pair of cutting knives which are caused to advance towards each other and recede by a suitable mechanical arrangement.

In the cube sugar cutting machine made by the Maschinenfabrik Grevenbroich, Fig. 206, the sugar plates coming from the drying stove are laid on the cutting machine in the link openings of a bronze carrier chain, which moves along the table surface which is likewise of brass, and are thus guided beneath the cutting knives arranged at right angles to each other; these chop the plates automatically first into strips and

then into cubes; the cubes are then carried further by the transport chain and fall on to a vibrating screen or sorting appliance whence they may be filled directly into bags, barrels or boxes standing below on a weighing scale.

Mathée and Scheibler's cube cutting machine has two pairs of knives, one pair cutting the slab into bars and the second pair cutting the bars into cubes. As shown in Fig. 207 the knives are arranged at an angle of 45° to the direction of motion of the slabs, which are placed diagonalwise on the conveyor.

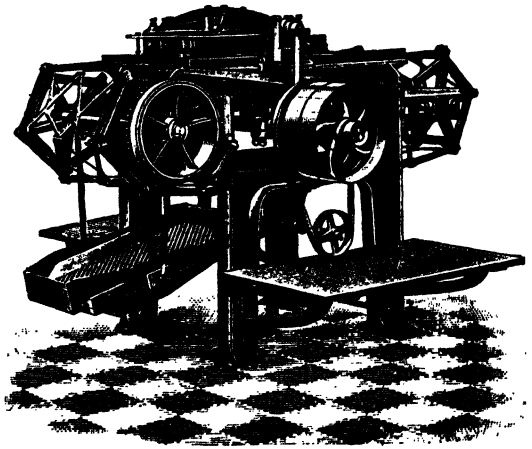

FIG. 206.—GREVENBROICH CUBE CUTTING MACHINE.

Granulated Sugar.—This form of sugar is already the leading article in the United States, and its consumption is rapidly increasing in this country. It well deserves its popularity, for in addition to being practically free from moisture and other impurities, it is easily dissolved, and does not lose weight or become discoloured by keeping. Many machines have been devised for producing granulated sugar, the most important being those invented by Hersey, Newhall, and Gibbs. The sugar dried in these machines must not be confounded with the so-called German or Austrian granulated,

which is generally raw beet sugar which has been washed with steam by the Weinrich or a similar process. Real granulated is refined in the ordinary way, and is boiled to a small sharp grain like that of loaf sugar, and then washed in an ordinary centrifugal machine with water or liquor. As it leaves the machine it contains from 1 to 1½ per cent. of moisture, nearly the whole of which is removed in its passage through the granulator.

Hersey's Granulator.—Figs. 208 and 209 illustrate this machine, the description of which is as follows: The heating cylinder C, which is fastened inside of the conveyor

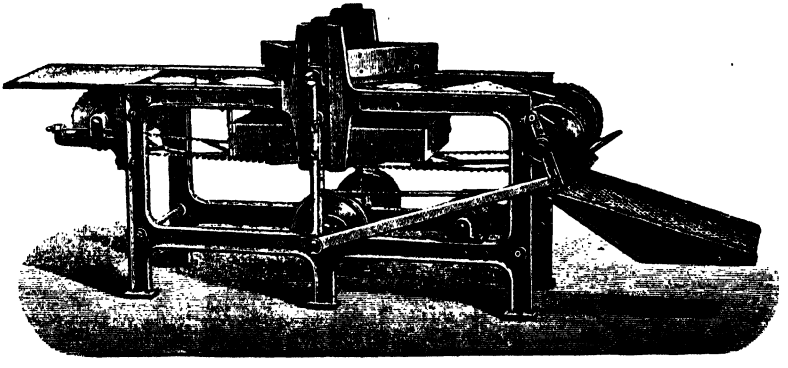

FIG. 207.—MATHÉE AND SCHEIBLER'S DOUBLE-CUTTING CUBE MACHINE.

cylinder D, and revolves with it, is filled with steam through the pipe E in one end, and the water of condensation is delivered from the opposite end through the pipe shown at F. The damp sugar as it comes from the centrifugals is delivered into the hopper Z. The hopper contains an adjustable device by which the sugar is fed at any desired speed into the elevator Y, and thence through the spout X into the granulator. By means of the lifting shelves H, Fig. 209, on the inside of the outer cylinder it is carried up and dropped in a continuous shower upon the heating cylinder, and rolls off by the rotation of the machine, to be again carried up, working forward to the

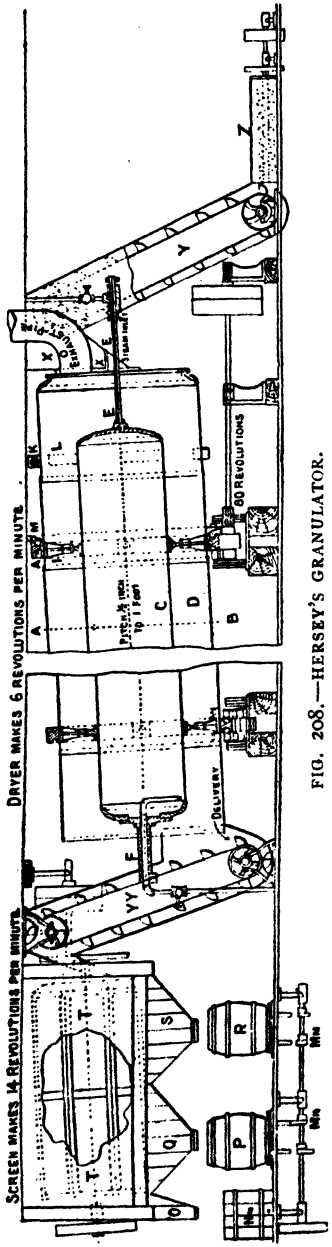

FIG. 208.—HERSEY'S GRANULATOR.

opposite end by the inclination of the apparatus, and is there delivered by means of the elevator Y Y into the screen T. The finer grade of sugar falls through the shoot S into the barrel R, the coarser through the shoot Q into the barrel P, while the lumps pass out at the end of the screen through the shoot O into the barrel N *n*. The barrels stand upon iron shaking-tables operated by the cams M *m*, which give them a constant rocking motion, by which the sugar is effectually packed. The heater cylinder is fixed centrally within the conveyer cylinder, and is adjusted and secured by means of the adjustable screws I. The conveyer cylinder is made of iron, and the heater is constructed of steel plate. The conveyer cylinder is 23 feet long and 6 feet in diameter, and the heater cylinder 20 feet long and 3 feet in diameter, and they make 6 revolutions per minute. The striker shown at K is for the purpose of removing any sugar that may adhere to the cylinder when first entering the machine, and is caused to move by the cams L L. The machine is rotated

by means of gear M upon the outside of the conveyer cylinder, driven by a pinion on the shaft N. The current of air, which is sometimes previously heated, constantly passes through the machine, carrying off the moisture from the sugar through the pipe O. The machine will granulate 6000 lb. per hour. Being automatic, but little labour is required in attending to it; the sugar being thrown into the hopper, passes through the dryer and then through the

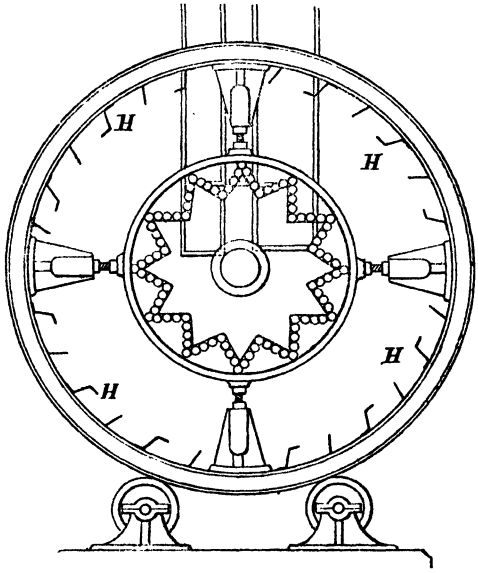

FIG. 209.—HERSEY'S GRANULATOR. Cross Section.

sifter or screen into barrels ready for the market. In a refinery, if room permits, it is advisable to place the hopper Z on a floor above the granulator, and the screens on a floor below, so as to avoid the use of elevators.

Gibbs's Granulator.—This machine has been adopted by sugar refiners both in this country and abroad. It consists of an inclined cylinder provided with shelves and cross-cells on its interior circumference, and with elevating gear by which the

degree of inclination can be altered and adjusted. Running through the whole length of the cylinder is a stationary air-duct of a D section, perforated with three or more lines of holes. Over each line protecting louvres are fixed in such a manner that, whilst allowing free exit for the air no sugar can enter the air-duct. A large volume of warmed air is driven by a fan into this air-duct, and emerges in thin streams from under the louvres. The cylinder as it rotates lifts up the charge of sugar (which is fed continuously at one end), and lets it fall in showers on to the flat face of the D-shaped duct, so that in its downward passage it has to pass through three distinct streams of warmed air, thus getting its full share of the drying action in its transit from end to end. The air is warmed by passing through pipes heated by steam or fire or over steam coils (as shown in Fig. 210), and its temperature is regulated by valves in the neck of the fan. It is a recognised fact that air is far more effective as a drying agent than any mere contact with transmitted heat from the

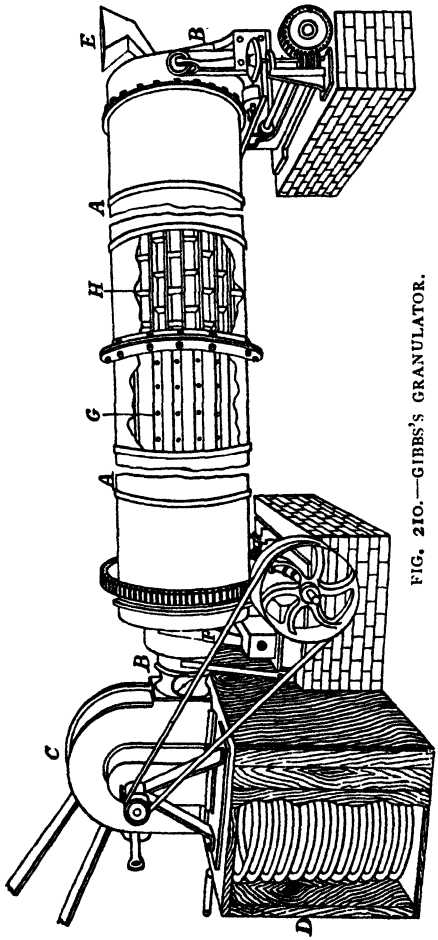

FIG. 210.—GIBBS'S GRANULATOR.

surface of metals, and one advantage of this system is that by the way in which the air is distributed, very large volumes of it can be used without blowing the sugar out of the cylinder, another advantage being that the air is delivered into the falling showers of sugar equally dry and effective all along the lines of the duct. If the same volume of air were either driven into or drawn from one end of the cylinder, it would become damp on its first contact with the moist product, and for the whole remaining length of its passage would be damping rather than drying in its action.

Combination Type of Granulator.—A form of granulator, made by Manlove, Alliott and Co., of Nottingham, which combines the principles of the Newhall and Hersey machines, is shown in Fig. 211. It is furnished with the steam jacket of the Newhall type and the internal steam drum of the Hersey granulator, with mechanical improvements for reducing the power needed for driving it.

Utilisation of the last Syrups of the Refinery.—After as much sugar has been extracted as is economically desirable, the residual syrup is either manufactured into treacle (the finer sort of which is known as golden syrup), or invert sugar, or when of very low quality is sold to the distiller, or made into cattle food.

Treacle and Golden Syrup.—With the syrup resulting from raw cane sugar it is generally only necessary to reduce it to liquor with hot water to a density of 28° to 29° B., to raise it to a temperature of 160° F., and then pass it through char, and boil down in a vacuum-pan to the required density. If, however, the syrup results from the refining of beet sugar, or a mixture of beet and cane, or even in some cases from cane sugar only, it is necessary to partially invert the sugar it contains, so as to prevent the gradual crystallisation of the sugar, which would otherwise occur and render the product unsaleable. The inversion may be carried out in the following manner: The syrup is placed in a wooden or iron cylindrical

vessel lined with lead, fitted with stirring gear, and it is then diluted with hot water to from 25° to 28° B. From 2 to 5 per

FIG. 211.—COMBINATION TYPE OF GRANULATOR.

cent. of sulphuric acid in a dilute state is next added, and the mixture is heated to nearly the boiling point with open steam, until on being tested it is found that the amount of invert sugar is about equal to that of the crystallisable sugar contained in it. The acid is then neutralised with milk of lime or carbonate of lime, and the liquor is filtered to remove the sulphate of lime, and after being passed through char is concentrated in a vacuum-pan. The percentage of sulphuric acid required for inversion depends, to a great extent, upon the amount and nature of the saline ingredients.

Invert Sugar, commonly known as Saccharum.—The process by which saccharum is produced is similar to that for making treacle as already described, except that the acid is not neutralised until the whole of the crystallisable sugar has undergone inversion, and also that, after leaving the vacuum-pan, the saccharum is stirred while cooling to promote crystallisation, and is then run into casks or pails, in which it solidifies to a honey-like consistency. If it is not agitated by stirring, the saccharum may remain liquid for some days, and it is sometimes sold in this state.

Processes of Purification.—It may be of interest to collect here a number of processes which have been patented in recent years for the purification of sugar juices, raw sugar solutions and molasses. The numbers refer to the English patents, and the year when taken out.

Ozone.—A. and L. Q. Brin, 12,535 (1886), proposed to decolorise or bleach a solution of raw sugar by passing ozone through it. F. Bauder, 16,397 (1888), refined raw sugar by passing steam and ozone through the moistened sugar in a centrifugal machine. A. Schneller and W. J. Wisse, 5236 (1891), sprayed sugar solutions or molasses solutions upon non-oxidisable filtering materials contained in scrubbers, and passed ozonised air through from the bottom, or, 14,575 (1891), ozone and carbonic acid. J. Y. Johnson for the Electric Rectifying and Refining Co., 28,763 (1890), subjected sugar

solutions and syrups to the action of an electric current by means of aluminium electrodes, at the same time or subsequently passing a current of ozone through the liquids, with the object of purifying and decolorising them. A. Verley, 1338 (1897) and 1131 (1898), treated alkaline sugar liquors with ozone, and afterwards neutralised with sulphurous acid. Reducing agents were also used. E. Beanes, 11,511 (1898), treated defecated cane or beet juice with ozone or ozonised air as a means of purification, and repeated the treatment with ozone after concentrating.

Peroxides and Oxidising Agents.—G. Ranson, 11,790 (1896), mixes syrup with barium peroxide, and then acts upon it with carbonic acid, or crushed raw sugar is fed into a heating apparatus and treated with cleare and a mixture of barium peroxide, water and bone-black. After refining, the syrup is run into moulds and cooled, and the slabs of sugar formed are cleared. C. J. Crosfield and S. Stein, 8592 (1898) and 7998 (1903), mix the sugar solution, after varied treatment for purification, with peroxide of hydrogen and a suitable phosphate, and the filtered solution is then boiled down to obtain crystals. E. and S. G. Luck, 26,475 (1898), purify and decolorise saccharine solutions by treating with a compound of barium or calcium with an oxide of manganese, such as barium or calcium permanganate. I. Kitsée, 22,715 (1899), bleaches saccharine solutions with chlorine gas, and passes in olefiant gas, preferably under pressure, to combine with the chlorine present. A. Nodon and J. Piettre, 1792 (1902), purify sugar juices by treating with peroxide of manganese, or this oxide and milk of lime, and subjecting the mixture to the action of an electric current. The electrodes used are made of an alloy of 80 parts of lead and 20 of antimony. The purified juice is saturated with carbonic acid and filtered. G. Harrison (for F. Hlavati & Co.), 16,750 (1903), purifies sugar during diffusion by adding gypsum, peroxides or permanganates of the alkali earths, a mixture of a hydroxide of

an alkali earth with peroxide of manganese or peroxide of hydrogen, etc. The use of polysilicates of aluminium or magnesium for the removal of earthy and alkaline bases are claimed, while the aluminium hydroxide formed removes gums.

Reducing Agents.—C. Leuchtenberger and B. Moiske, 9690 (1887), decolorise molasses or similar syrup previous to inversion by treatment with zinc and alcoholic ammonia, whereby the organic acids are partially reduced to aldehydes. C. Steffen, 17,632 (1893), treats carbonated juice, or partially decolorised and purified syrups, with sulphurous acid, after cooling to a temperature below 60° C., and then passes the treated juice or syrup over char. Or, 20,397 (1893), the solution may be neutralised and filtered before passing over char. C. F. Kastengren, 5953 (1896), purifies molasses by heating with the sulphite of an alkali or sulphite of calcium which may contain sulphurous acid in excess. G. Ranson, 19,815 (1896), treats sugar solutions at 50° C., and made alkaline by means of baryta water or carbonate of soda, with peroxide of hydrogen and powdered char. To remove excess of oxygen, the syrup is run into a closed tank containing finely-divided zinc and a bisulphite, or hydrosulphurous acid may be added directly. W. P. Thompson (for J. C. Boot), 18,143 (1898), effects the decolorisation of molasses and syrups by adding zinc and sulphurous acid, and precipitates the zinc with potassium ferrocyanide. In 6761 (1900), the syrups are preferably heated to 75° to 95° C. during the treatment with sulphurous acid. O. Imray (for G. Ranson), 25,642 (1898), saccharine liquors are purified and decolorised by passing a current of sulphurous acid gas into the sugar solution, and subsequently treating them with metallic tin obtained by electrodeposition from an alkaline bath. G. Hughes (for L. Descamps), 8304 (1902), decolorises syrups by the use of a new hyposulphite, the manufacture of which is described.

Salts and Acids.—A. and L. Lefranc and A. Vivien, 10,331

(1890), treat juices, syrups and molasses with a solution of fluosilicate of iron or lead, and agitate by means of a current of air, or mechanically. They separate the precipitated organic or other matters, and neutralise by the addition of a base or a double sucrate of lead and lime. They give various processes for the recovery of the reagents for re-use. J. Duncan, 11,473 (1890), improves the flavour of molasses syrups, especially from beetroot sugar, by diluting with water, treating with sulphuric acid, and concentrating to drive off the volatile impurities, at the same time passing through a current of air, carbonic acid gas, or sulphurous acid gas. The concentrated syrup is then neutralised and passed through char before final concentration. C. Kilpatrick and the Ferric Sewage and Water Purification Co., 4440 (1892), employ ferric chloride or sulphate to purify and decolorise syrups, and remove excess of iron salts left by lime, calcium phosphate, or a tannate. F. Graeger, 8795 (1893), neutralises molasses with sulphuric acid, and then adds a small excess, and filters the molasses without boiling. R. E. Evans, 14,373 (1893), purifies syrups by the use of aluminium hydroxide, either alone, or mixed with other substances. The hydroxide may be added to, or formed in the syrups treated. B. Lach and H. Benies, 8463 (1894), purify syrups with the waste products from the manufacture of yellow prussiate of potash. W. Feld, 6508 (1896), treats molasses with barium hydroxysulphide, and decomposes the separated barium sucrate with sulphurous, sulphuric, or carbonic acid. The barium precipitate is treated for further use as in 16,009 (1896), and 16,441 (1896), by reconverting it into hydroxysulphide.

L. Sternberg, 18,429 (1897), describes an apparatus for the treatment of the residual solution from the barium hydroxysulphide process, with a view to the regeneration of the reagent. E. W. Gerbracht and F. G. Wiechmann, 16,292 (1898), treat defecated beet juice and black strap with a phosphate of lime or ammonia. After boiling the juice *in*

vacuo, filtering and concentrating, the mass is centrifugalised to separate the syrup from the sugar crystals. W. P. Thompson (for H. A. J. Manoury), 19,961 (1898), treats low refinery syrups, which are too rich for sale as molasses, with baryta or strontia to obtain sucrate. The sucrate is then treated in the blow-up with sulphurous or phosphoric acid, or a sulphate of magnesia, iron or zinc to precipitate the baryta or strontia. F. Hlavati, 21,985 (1901), adds hydrofluosilicic or hydrofluoboric acid, neutralised with calcium hydroxide, to sugar-cane or beetroot juice during the defecation with lime. Oxidising agents as calcium peroxide, manganese peroxide, and hydrogen peroxide may also be added. The juice is then saturated with carbon dioxide and filtered. Vegetable matters, as hay and grass, or preferably such as contain tannic or gallic acid, such as valonia, quebracho or sumac, may also be added to the juice. During the passage into the evaporating apparatus, iron filings, zinc dust, zinc antimonide, zinc calcide, magnesium silicide, aluminium sulphide, sulphide of phosphorus, phosphorous acid, hypophosphorous acid, or other suitable substance may be added ; or charcoal powder may be added, and an electric current passed through the juice during the evaporating process. The concentrated and decolorised syrup may be treated successively with sulphur dioxide and sulphuretted hydrogen, and the syrup concentrated to a massecuite. J. A. Besson, 9506 (1902), treats saccharine juices with ammonia, amines, ammoniacal or amine salts, or their derivatives, either during the diffusion or carbonatation process. The juices, after filtration, are subjected to the action of metals in a finely divided condition, as magnesium, zinc, tin, antimony, aluminium, or an alloy of aluminium, preferably during concentration. W. T. Whiteman (for Syndicat Hlavati), 15,274 (1903), treats beetroot or sugar-cane juice, after concentration with ammonium hydrofluosilicate and milk of lime. The ammonia is evaporated off, and the precipitates of hydrofluosilicates of lime and potash are filtered off. W. C. Salis-

bury and A. J. Kramper, 26,665 (1903), defecate, clarify and bleach syrups by adding alum and sodium bicarbonate, boiling and agitating, and skimming off the impurities.

Sucrates.—F. Haron, 7259 (1897), dilutes partially exhausted syrups with wash-water, and treats with lime to form a mono-sucrate, which is decomposed by carbon dioxide to yield the purified syrup. R. H. Pickles, 5197 (1892), makes soluble sucrates of aluminium, iron and chromium for use as mordants by first forming a sucrate of lime by adding cream of slaked lime to a solution of sugar. A. Wohl, 22,859 (1895), treats molasses with potash lye or other alkaline solution, and a mixture of finely ground yellow oxide of lead and water. The mixture is stirred to promote formation of lead sucrate, which is mixed with hot water, and filtered and washed. The sucrate is decomposed by treatment with carbon dioxide, and filtered. The last traces of lead are removed by heating the solution with animal charcoal, or powdered magnesium. G. Kassner, 23,171 (1895), removes sugar from its solutions by passage over lumps or pasty masses, composed of a mixture of lead protoxide with cellulose fibres, hairs, sawdust, carbonate of magnesia, carbonate of lime, or lead sucrate. The lead oxide used may be either the hydrated or non-hydrated oxide. The oxide mixture should be in hard lumps when concentrated solutions are treated. The sucrate is then decomposed by carbon dioxide. D. Loiseau, 24,593 (1897), utilises a bibasic sucrate and a crystallised hydrated carbonate of lime for the purification of sugar liquors and syrups. The limed juice is treated at 25° to 30° C., with carbon dioxide, until a gelatinous precipitate is formed containing the sucrate. It is then mixed with raw unlimed juice, and filtered. M B. Zahn, 8222 (1897), treats molasses with powdered quicklime in a vessel provided with stirrers and cooling arrangements. J. Wetter (for M. Weinrich), 21,146 (1902), purifies and preserves raw sugar by intimately mixing it with 2 to 4 per cent. of lime to form a sucrate. The mixture is subjected to the

action of heat and air in a revolving drum, or a trough provided with stirrers, so as to remove volatile products. The crystals are then washed with syrup or steam to separate impurities from the sugar and lime sucrate. The lime is subsequently removed by chemical precipitation. The alkalinity of the raw sugar crystals prevents the formation of invert sugar during storage.

Organic Substances.—H. H. Leigh (for W. V. Fry), 581 (1891), purifies cane juice by means of a solution obtained by boiling leaves or twigs of eucalyptus in water. C. A. Spreckels and C. A. Kern, 24,569 (1901), for purifying sugar syrups or molasses, use a compound formed by mixing sulphuric acid, etc., with resinous bodies, fats, fatty oils, fatty acids, or essential oils, at a low temperature. The excess of acid is afterwards removed or neutralised. Fuller's earth may be added to the mixture of the sugar solution and oleaginous product, and the whole filtered. Crystals may be mixed with the composition, which does not dissolve sugar, 17,912 (1902), and the defecating sulphonated compound, and the impurities removed by subjecting the mixture to centrifugal action. M. Kowalski, 3642 (1901), purifies syrups and molasses by means of phenol or other similarly constituted bodies. After the addition of phenol to the diluted syrup, the latter is treated with acids, as sulphurous or hydrosulphurous acids. The purified syrups, after being rendered uncrystallisable by previous inversion, can be used in textile finishing processes, or in tanning. J. McGlashan, 23,779 (1902), purifies sugar solutions by inoculating with pure cultures of an organism, or several organisms that have feeble power of inversion, but have the power of decomposing invert sugar into alcohol and carbonic acid. The alcohol produced may be recovered by distillation.

Electrolysis.—C. D. Abel (for Pfeiffer and Langen), 165 (1887), treats syrups with lead oxide or lead used as electrode for an electric current to remove colouring matters, invert sugar and raffinose. J. Marx, 2367 (1888), treats sugar beets

by electrolysis in a vessel with three dialysis compartments filled with water. Pieces of sugar beets are placed in the first compartment, lime in the second to precipitate sulphuric and phosphoric acids, and baryta in the third to form sucrate of baryta. E. Maigrot and J. Sabates, 9994 (1889), purify saccharine juices by treatment with electric currents, whereby some of the impurities become insoluble, and others pass into the outer cells of the arrangement. The juices are then subjected to a reverse current, and are then ready for evaporation. H. H. Lake (for P. H. Van der Weyde and O. Lugo), 136 (1894), employs shallow tanks with anodes of aluminium and cathodes of carbon for treating saccharine solutions, which are filtered after passing the electric current, and passed through char. The use of char may be avoided by adding acid phosphate of lime to the solution. D. Blyth, 5518 (1894), purifies and decolorises saccharine solutions by filtering them through a bed of magnetic oxide of iron while subjected to an electric current. J. Y. Johnson (for Javaux, Gallois and Dupont), 14,858 (1894), circulates beetroot juice through a series of compartments provided with anodes in sets, one set being composed of plates of oxide of manganese, another of lead, and the next of iron, aluminium, or zinc. Cathodes of iron, carbon, or other conducting material, insoluble in alkalis, dip into the frames through which water circulates. The juices are treated first with lime and baryta. The mud which separates is drawn off by cocks. W. Bein, 21,838 (1894), preserves an intermediate body of liquid as a means of keeping the products of decomposition formed at the anode and cathode separated. G. Gin, 22,568 (1894), treats syrups with basic aluminate of calcium, filters, heats to about 85° C., and passes through an electrolytic apparatus, whence the alkaline and acid liquids are separately removed. The liquids passing from the cells are treated by a process of electric osmosis. O. Imray (for Soc. Anonyme Raffinerie Say), 7108 (1905), purifies saccharine juices by electrolytic treatment, adding a

soluble salt, as sodium chloride, which will form with lead insoluble, or slightly soluble salts, so that the lead anode may remain clean, and uses anodes of a sinuous or pleated form having a reciprocating motion imparted to them. C. A. Meygret, 17,315 (1897), electrolyses sugar solutions for purification by circulating them between electrodes of iron and carbon, the compartments being separated by partitions made of canvas steeped in fish-glue, dried, and afterwards dipped into a solution of tannin in chromic acid. R. Harvey, 21,256 (1900), clarifies sugar juice in a continuous defecating apparatus, comprising a series of vessels arranged in a step-like manner. The upper part of each vessel has insulated zinc plates which may be connected to a dynamo for treating the juice by the mangano-electric process. W. P. Thompson (for Lavolloy and Bourgoin), mixes saccharine solutions with manganates of the alkali earths, then subjects the solutions to the action of an electric current, and finally adds freshly-precipitated barium carbonate to purify and decolorise them. G. B. Schwerin, 8086 (1901), treats beetroot or other saccharine material by a combined electrolytic and osmotic process to obtain a saccharine solution. The solution is then treated with aluminium to precipitate albuminates. A. Kollrepp and A. Wohl, 9048 (1902), add moist sucrate of lead to defecated juice, and subject the solution to an electro-dialytic process by treating it in an electrolytic cell having electrodes of carbon and iron, and a diaphragm of parchment paper. The lead is then removed, after filtration, by means of lime and carbonic acid. M. H. Miller, D. Huether, A. H. Hough, A. McNeill and R. Fischer, 14,182 (1903), purify raw beet, or cane juice, or molasses, by electrolysing it in a special separator, after which it is heated, filter-pressed, again electrolysed, heated and filtered, and then evaporated to a syrup. C. D. Abel (for Siemens and Halske Aktien-Gesellschaft), 14,195 (1903), treats diffusion juice contained in a porous earthenware cylinder, which is placed in a larger vessel filled with water, and

containing a cathode. The anode is immersed in the juice, and is covered with parchment or the like, and dipped in milk of lime. The acids pass to the anode compartment, during electrolysis, where they become fixed by the base used. The albumen bodies coagulate and separate by precipitation. S. Leetham, 5790 (1904), treats air electrically by a silent and a spark discharge, which may be combined for treating air to render it suitable for bleaching, conditioning, or sterilising sugar. A. Kollrepp and A. Wohl, 27,289 (1904), describe a modification of 9048 (1902), as used for purifying sugar solutions for making syrups. About one-third of the alkalis is driven off by electro-dialysis, and the acids liberated are precipitated by lead sucrate, lead hydroxide, or other basic compound of lead, with the addition of acid if required.

Char and Substitutes.—W. P. Thompson (for Diebl and Mensik), 7640 (1888), makes a decolorising agent by carbonising sawdust. The carbonised material is treated first with a hot concentrated solution of alum, and then with a solution of sodium carbonate to precipitate hydrated alumina in its pores. J. Zeller, 17,218 (1890), makes a clarifying agent for sugar by burning bituminous slate and cooling the mass with water. P. Pessé, 7561 (1898), uses fresh or revivified pulverised char with liquids already somewhat purified. After being filtered off it may be used twice or thrice without revivification. R. A. L. Hill, 7808 (1898), prepares a deodorising and decolorising agent for syrups by heating blocks of plastic clay, free from sulphates of lime and magnesia. It is then granulated and mixed with hard wood sawdust which has been steeped in a mixture of crude petroleum and linseed-oil. After standing for some time the whole is baked in closed retorts. J. M. E. Fontenille and H. G. J. R. B. Desormeaux, 8372 (1898), use finely powdered char for the preparation of liquor for cubes from raw sugar liquor. R. A. Chesebrough, 8561 (1898), dries clay, grinds it finely, and mixes it with crude petroleum residues, and finally heats it in closed retorts

to about 800° F. The clay used is known as "Florida fullers' earth." R. W. Barker, 114 (1899), prepares a filtering and decolorising material by saturating clay with a carbonaceous solution. It is then dried, fractured, screened and baked in closed retorts at a temperature below its fusing point. The resulting product should contain from 4 to 8·5 per cent. of carbon. It may be revivified by heating in a closed retort sufficiently for the absorbed oxygen to remove the excess of carbon accumulated during use. R. A. Robertson, 2572 (1900), heats cane juice with wood charcoal by direct contact with steam to 250° F., and filters or allows to subside at the same temperature. The clear liquid is delivered directly to a multiple effect evaporator. F. Breyer, 6388 (1900), purifies beetroot juice by subjecting it, at a temperature not above 50° C., to the action of lime and filtering. It is then boiled with finely-divided animal charcoal and filtered, to remove char and the beetroot salts which crystallise upon the char.

Filtration.—G. F. Redfern (for M. Weinrich), 5283 (1890), adds to the sugar solutions to be filtered and purified, finely divided begass, cobs and stalks of maize, ground cork, sugar cane, sorghum cane, or sugar beets, or mixtures of the above materials. The liquor, with the added materials, is heated to the boiling point and passed through a filter-press, or drawn through a cloth in a tank provided with a perforated false bottom, or treated in a centrifugal separator. J. J. Hignette, 28,589 (1897), decants limed juice into a centrifugal separator, provided with a solid drum. The juice is there treated with carbonic acid gas under pressure, the bleached juice being drawn off continuously. R. Harvey (for L. Naudet and H. C. Hinton), 27,666 (1903), subjects the juice from sugar cane, beetroot, etc., to forced filtration through the begass or pulp respectively. The exhausted begass is pressed to extract the contained liquid, and is used as fuel. A series of macerators are used in turn.

CHAPTER XXII.

ANIMAL CHARCOAL OR BONE BLACK, COMMONLY CALLED "CHAR."

IN consideration of the important part which animal charcoal plays in sugar refining, it is advisable to collect as much information as possible regarding its nature and properties. Many of these particulars could not be conveniently incorporated in the description of sugar refining, and accordingly they have been made the subject of this special chapter.

Animal charcoal should be made from well-selected clean bones of compact structure. These are first boiled or treated with a solvent such as benzine to remove the fat they contain, and they are then carbonised in vertical or horizontal cast-iron retorts, the whole carbonising apparatus being similar to a small gas-works. The volatile products pass up ascension pipes and then through a hydraulic main to scrubbers and washers, in which the bone-tar and ammonia-liquor collect, the residual gases finally finding their way to a gas-holder. The passage of the volatile matters is assisted by an exhaust-fan. After being heated to a red heat for from 8 to 10 hours, the char is withdrawn from the retorts and cooled in iron canisters, which immediately on being filled are covered by lids and luted with water or charcoal paste round the edge to exclude the air. When the char is quite cold it is crushed in a suitable mill in different sizes of grist. Before crushing, any pieces of iron which may be mixed with the bones are removed by means of electro-magnets. Dried blood, leather, horns and other animal matters, yield, on being carbonised, a char possessing great decolorising power, and though, on

account of its friability, such char is not suitable for sugar refining, it is employed to some extent in bleaching oils, fats, glycerine, etc.

In new char the carbon should range from 9 to 11·5 per cent., the siliceous matters should not exceed 0·5 per cent., the peroxide of iron 0·15 per cent., and the sulphate of lime 0·2 per cent. A cubic foot should not weigh more than 52 lb. When incinerated, the ash ought to be of a uniform white or cream colour. The grain or grist should be even, and the colour black or dark brown. It should be hard, but at the same time porous in structure, adhering strongly to the tongue. These are the principal characteristics of a good sample of char.

Char manufactured in this country is generally of good quality, but the same cannot be said of that made on the Continent. The foreign manufacturers often combine the manufacture of gelatine with that of charcoal, making the latter from the partially degelatinised bones, and there is reason to believe, occasionally supplying the resulting deficiency of carbon by a judicious admixture of spent or exhausted char containing a superabundance of that element. This adulteration can be easily detected by calcining a small quantity, when the ash will be found to present a speckled appearance. The ash of spent char is either grey or red. Even if the foreign char is honestly manufactured, the small grist which finds its way here is generally the softer portion resulting from the production of the large hard grist required on the Continent.

It would not be right, however, to condemn all foreign char, as some continental manufacturers make a perfectly good article. It is important that char should be hard, otherwise considerable inconvenience and loss will be experienced from the production of dust. Even with good char, however carefully it may be handled, it is impossible to avoid the destruction of a certain amount by the attrition to which it is

subjected in its journeyings in the refinery, and the small char being softer than the large is destroyed to a greater extent.

When the percentage of dust in the working char reaches a certain point, especially when the dust is very fine, it is a source of considerable trouble in various ways, and it is usual therefore to reduce its amount by passing the char over a fine screen, or by means of a current of air. The size of grist which it is most suitable to employ depends upon the purpose for which the char is to be used. If the solution of sugar to be purified is of high specific gravity, then large grist should be selected, but fine grist is more suitable in the case of ordinary liquor of 28° to 30° B. At present most refiners prefer small-grained char, and as fine char removes more colour than coarse, they are justified in so doing; but as the difficulty of washing, and also the amount of sweet washings increase with the degree of fineness, this preference may be carried to too great an extent. The reason that fine char is more active than larger grist may be due to the fact that the larger grist retains the liquor to a greater extent, and so prevents its circulation.

The temperature of the liquor has a considerable influence in aiding or retarding the action of the char. The time during which the solution to be decolorised is kept in contact with the char is also of importance.

After the time is reached at which the best results are obtained, any further contact is attended by loss of colour, owing to the action of heat producing more colour than the char can, under the same conditions, remove. It has been proved by various experiments that cane sugar is more easily deprived of its colour than beet. This may be due, to a great extent, to the fact that cane sugar is almost always acid, and beet sugar alkaline, and also that the easily removable colouring matter of the latter has been removed by the greater care taken in its manufacture. Before employing new char for

refining it should be carefully washed with hot water until the washings give with nitrate of silver and nitric acid no more indication of chlorine than is due to the washing water.

The decolorising action of char depends to a great extent, but not entirely, upon the carbon it contains. If the mineral matter of, for example, 100 parts of char be removed by means of hydrochloric acid and careful washing with water, the 10 to 12 parts of carbon remaining will be found to have at least as great a decolorising effect as the whole char from which it was derived. On the other hand, if the carbon and organic matter be removed from 100 parts of the same char by incineration, the mineral matter remaining will be found to possess a decolorising power of about one third or one fourth the extent of the original char. Thus the carbon and the mineral matter when in the separate state do more work than when they are combined.

Unfortunately, however, the carbon of animal char, when freed from its accompanying mineral matter, is in too soft a condition to admit of its use for refining purposes, on account of the impossibility of passing liquor through a cistern containing it, and even if it were stirred up with the liquor, its separation therefrom would involve the expense and trouble of filter presses. Lastly, there is no known apparatus in which such carbon can be re-burned satisfactorily so as to enable it to be used over again. For these and other reasons the sugar refiner is content to avail himself of the more lasting, though less effective results, which can be produced by the use of char in its ordinary condition.

Char possesses, as is well known, the power of absorbing many times its volume of various gases, such as oxygen, nitrogen, carbonic acid, and ammonia, and different investigators have given the credit of the work done to one or more of these gases; but as it has been demonstrated that char from which the absorbed gas has been driven out by heat, and which has then been allowed to cool in various gases and

in a vacuum, has in all cases the same effect, it is evident that the gases play at most a very unimportant part in the action.

It has been stated by P. Degener and Lack that peroxide of hydrogen is generated when char is exposed in the damp state to air, and that this is the reason to some extent why colour is removed; but this cannot be the case, for peroxide of hydrogen would undoubtedly destroy the organic colouring matter, or modify it to such an extent that it could not be recovered. In the case of char, however the whole of the absorbed colour can be dissolved out with a suitable solvent, such as a solution of ammonia, potash, or soda.

Char seems to act by means of a surface attraction, merely withdrawing the colouring matters, etc., from the liquid passed through it, much in the same way as peat, fuller's-earth, and many other substances do to a less degree.

In addition to its action on colouring matters, char removes many mineral and organic bodies, and particularly in the case of sugar solutions, the lime salts, gum, and albumen. New char is most suitable for low sugars, as it produces a golden-coloured liquor, which cannot be obtained from char which has been in use for some time. This may be partly due to the fact that new char gives off a large amount of ammonia, which renders the liquor alkaline, and colours it if any glucose be present. If white liquor is desired, it is necessary to employ char which has been in use for some time, and from which the alkalies have been practically removed by repeated washing. It has been found that new char gives off a liquor containing ferric salts, and old char ferrous salts, when liquor containing iron is passed through it. This is probably due to the new char containing more oxygen than the old.

Char which has been freshly burned and cooled in a vessel from which air is excluded gives out a considerable amount of heat on being exposed to the air, owing to absorption of the latter.

Washing used char by an upward current of water has been patented and often tried. But it is obvious that the solution of sugar, however weak it may be, is heavier than water, and will have a downward tendency, and so by continually mixing with the water will greatly increase the sweet washings and loss of sugar.

Elwes suggested (English Patent, 2189, 1875) passing the liquor in an upward direction, introducing fresh char continuously at the top of the cistern, and removing the used char also continuously at the bottom, and more recently several very ingenious patents connected with a similar mode of working have been taken out by Matthiessen and also by Quimby.

Espeut, De Castro, and others have patented emptying and filling the cisterns by means of a current of water under pressure, and this method, so far as emptying is concerned, answers well enough if the char has only to pass through short straight pipes; but if the pipes are long, and especially if there are bends in them, they are certain to stop up and give much trouble. If this plan of emptying be used, the bottoms of the cisterns should taper towards the centre to the extent of the angle of repose of wet char, otherwise a considerable portion of their contents will have to be removed by hand.

In re-burning char, a high temperature, besides being a waste of fuel, causes serious injury to the char by contracting its pores, and so rendering it, in the course of time, less active. Working char heated in an oil-bath to 550° F. for one hour had the same decolorising power as when re-burned in a pipe-kiln, and the same char heated in a bath of melted lead to a temperature of about 617° F. for one hour gave rather more decolorising power than similar char re-burned in the kiln. It has been shown by these and many other experiments that a very short and intimate contact with heat not exceeding 700° F. is all that is necessary to obtain good results. It is im-

possible to work at so low a heat in a pipe-kiln even of the best design and with the most careful management. The pipes in the kiln, even if they revolve, are sure to be unequally heated, the row nearest to the fire having to be heated to a much greater extent than the others, to make certain that the latter are raised to the required temperature. Owing to the difficulty experienced in evenly re-burning char, many plans have been suggested and patented for improving the mode of working. The use of superheated steam and various gases has been much recommended, and in some cases employed on a large scale. This method of applying heat possesses the advantage of equally heating the char; on the other hand, there is a danger, if the temperature is high, of a destruction of carbon by the action of the steam or gas. However, with care, the loss from this cause may be reduced to an insignificant amount.

As a rough means of ascertaining whether char leaving a kiln has been sufficiently re-burned, it is usual to boil a small portion with a solution of soda, which turns brown if, owing to the presence of organic matter, the carbonisation is not complete. Some refiners also employ a solution of acetate of lead in addition to soda, when, if a blackening takes place owing to the presence of a sulphide, they regard this as an indication of over-burning. The odour given off by insufficiently burned char as it leaves the coolers is also characteristic.

Improvement of Working Char.—Under certain circumstances the carbonate of lime, carbon, iron, and other constituents, increase to such an extent during long use, as to render their reduction a matter of importance, and various means have been devised to attain this end. The treatment with dilute hydrochloric acid to convert the carbonate of lime into chloride of calcium is the ordinary mode adopted on the Continent in the beet-sugar factories, but this plan is open to the objection that a certain quantity of phosphate of

lime is sure also to be decomposed, and that the framework of the char will consequently be injured. To obviate this to some extent, it has been proposed to exhaust the air previous to the introduction of the acid, so as to bring the latter instantaneously in contact with every particle of the char, and in this way equalise its action. To further overcome the difficulty, Beanes used dry hydrochloric acid gas, which is said to have no action on phosphate of lime. Stenhouse and Duncan proposed to use dilute nitric acid in place of hydrochloric acid, and there is but little doubt that it possesses advantages over the latter. Cook has suggested treating the char with a solution of chloride of ammonium and then re-burning so as to produce carbonate of ammonia, which goes off, and chloride of calcium, which is afterwards dissolved out. Cook also patented the use of phosphoric acid to decompose the carbonate of lime. Patrick, Beanes, and others have proposed to dissolve out the carbonate of lime by means of a saturated solution of carbonic acid. In English refineries the carbonate of lime in all cases, so far as can be ascertained, decreases during use, and this appears to be due to the employment of cane sugar, which is generally slightly acid. It has been proposed to reduce the carbon by re-burning the char after it has been saturated with a solution of nitrate of ammonia, but this does not appear to have been carried out on a large scale.

In those refineries where the carbon in the char is kept as nearly as possible at the same percentage as when new, or even less than this, the result is obtained in part by liberal washing, but it is chiefly due to the accidental introduction of air into the kiln pipes. This is evident from the fact that as there is a constant production of carbon going on from the carbonisation of the absorbed organic impurities which cannot be washed out, the total carbon must, of necessity, increase in the absence of atmospheric oxidation. The carbon destroyed in the kilns is partly derived from the char and partly from

the organic impurities contained in it. The excess of carbon in old char is removed in Weinrich's process (p. 603) by oxidation, below a red heat, in a current of air. The organic matters may be removed directly in this manner without the previous destructive distillation which takes place when the char is burned in the kiln in the usual method of revivification. When carbon or organic matters are burned off in this way, the original carbon of the char is not affected, and may be maintained at a constant percentage. Instead of revivifying by carbonisation, it has been proposed (and, to some extent, carried into effect) by Eisfeld, and also by Phillips, to digest the char after use, in a solution of ammonia, potash, or soda, in water or alcohol, the ammonia and alcohol being recovered by distillation. In this way the colouring matters and a large portion of other organic and mineral matters taken up from the sugar can be removed. This process has been worked on the Continent, but only experimentally in this country.

Removal of Iron.—Magnets have been used to remove the iron existing in the metallic state or as magnetic oxide, and a considerable amount can be withdrawn in this way. The plan of souring the char, as it is generally called, is often used as a means of improving the quality of old char. The method of working is as follows: A cistern of char, from which the sugar is nearly removed by washing, is allowed to stand for some days to ferment, when the sugar is converted into acetic and other organic acids, which act upon the carbonate of lime and sulphide of calcium, and to some extent dissolve the iron also. The resulting soluble lime and iron salts are removed by washing, and the char on being re-burned, generally shows a marked improvement.

In revivifying char, a curious deposit or scale forms inside the kiln-pipes; this consists of sulphide of iron. The sulphur, possibly is derived from the sulphurous acid in the flue gases which finds its way through the porous red-hot cast-iron, and,

meeting with the reducing gases given off from the charcoal, is reduced to sulphur, which combines with the iron in the interior surface of the pipe, the temperature of which is somewhat lower; or, as has been suggested, it may be formed from the sulphur existing as sulphide of calcium in the char.

SUGAR ANALYSIS

CHAPTER XXIII.

THE complete analysis of raw sugar, or of cane or beet juice, is a problem of considerable difficulty, on account of the number of organic matters present, consisting of inverted sugar, colouring matters, waxy substances, and nitrogenous impurities, the accurate separation of which is all but impossible.

A large number of organic acids have been reported to be found in combination with the bases in raw sugars, molasses, etc. The principal of these, named in alphabetical order, are: acetic, aspartic, apoglucic, butyric, citric, formic, glucic, humic, lactic, malic, melassic, metapectic, oxalic, pectic, succinic, tartaric, and ulmic. There are also certain nitrogenous matters, especially betaine, peculiar to beet sugar, asparagine, albumin, legumin and ferments; and certain non-nitrogenous organic matters, such as pectose, pectin, mannite, starch, colouring material, caramel, cellulose, gum, fat, and wax.

The salts present in raw sugar, molasses, etc., consist chiefly of potash and lime salts, and smaller proportions of the salts of soda, magnesia, oxides of iron and manganese.

These bases may be present as salts of some of the organic acids already mentioned, but they also frequently occur in the form of sulphates, nitrates, phosphates, chlorides, carbonates, and silicates. The process of analysing a sample of cane or beet sugar, either raw or refined, will now be described, with one preliminary remark. The discrepancies which sometimes

occur in the analysis of samples of sugar are due more to imperfect sampling than to errors in analysis. This is especially the case with low sugars of the jaggery class, which sometimes contain 10 per cent. of fragments of pottery and stones, and in many cases 7 to 10 per cent. of moisture. Great care must be taken to ensure thorough admixture of the sample before weighing out the quantities for analysis; it is also essential to keep the samples in well-closed bottles to prevent loss of moisture.

In analysing a sample of raw sugar it is usual to make direct determinations of the amount of each of the following constituents:—

1. Sugar, sometimes spoken of as cane sugar or crystallisable sugar.

2. Uncrystallisable sugar, including invert sugar and other bodies capable of acting upon the copper test, which are often put down under the name of "glucose."

3. Mineral matter, or ash. This again is sometimes divided into soluble and insoluble ash.

4. Moisture, or water.

The remaining constituents are usually classed together as "undetermined" or "unknown organic matters," and include various organic substances, such as organic acids, albuminous and colouring matters, etc. These are difficult to determine, and their correct determination is not considered of importance in valuing a sugar, so their amount is made up by difference, i.e. the percentage of sugar, glucose, ash, and moisture having been ascertained, whatever is wanting to make up the 100 is put down as "undetermined organic matters."

A simple mode will now be given for determining the amount of each of the important constituents in a sample of sugar.

Determination of Sugar.—Weigh 26·048 grams of sugar, and transfer it by means of a funnel and a little water, hot

water by preference, to a 100 c.c. flask. Enough water is next added to thoroughly dissolve the sugar, and then the flask is dipped into cold water, so as to bring its contents to the ordinary temperature of 60° F. On adding one or more c.c. of solution of basic acetate of lead, many colouring matters and other impurities are precipitated. If the solution of raw sugar is light in colour, very little acetate of lead is required, but a good deal must be used to remove the colour from dark solutions. The correct amount can be easily hit upon after a little practice, and it is advisable to avoid an excess, or on subsequent filtration some of the oxide of lead remaining in solution may be precipitated as carbonate of lead by the action of the carbonic acid in the air, and the solution rendered turbid. It is sometimes desirable to add a little solution of sulphate of soda to remove any lead which would otherwise remain in solution. With raw beet sugars it is advisable to add very little basic acetate of lead, which may be advantageously followed by a drop or two of a solution of alkali sulphate. The addition of a small amount of well-washed hydrate of alumina will be found to improve the subsequent filtration. The contents of the flask are when cold made up to 100 c.c. Should there be any froth on the surface, it may be removed by adding a few drops of alcohol just before making up to the mark on the neck of the flask. The contents of the flask, after having been well shaken, should be filtered through a dry filter into a glass cylinder or beaker, the first part passing through being returned to the filter. The 200 mm. tube of the polariscope is next taken, and thoroughly cleaned and dried. The screw-cap and glass plate having been removed from one end of the tube, the latter is next filled with the decolorised sugar solution. The glass plate and screw-cap should now be replaced, being careful not to screw down too much, which would strain the glass plate and affect the optical results. Instead of drying the tube, it may be rinsed out two or three times with the solution to be tested. When a

light is observed, by looking through the eye-piece of a polariscope, a circular disc is seen, divided vertically into two halves, which should have exactly the same tint when the zero on the fixed part of the scale coincides with that on the movable part. If a tube containing sugar or any other optically active substance be introduced into the polariscope, the equality of tint is disturbed, but by turning a small handle or milled head, placed below the front of the instrument, the two semi-discs may be made to assume one and the same tint. The percentage of sugar should then be read off on the scale, and by the aid of the vernier this can be easily done to a tenth of a per cent.

Determination of Glucose.—The glucose is estimated by Fehling's solution, which may conveniently be made in the following manner: Some pure crystallised sulphate of copper, previously powdered and dried by pressing it between folds of filter paper, is got ready, and of this 34·639 grams are dissolved in 200 c.c. of water. In a separate vessel 173 grams of pure crystallised Rochelle salt are dissolved in 480 c.c. of a solution of pure caustic soda, having a specific gravity of 1·14. The first solution should now be gradually added to the second, which is previously placed in a litre flask, and the mixture should be agitated after each addition, sufficient water being finally added to make up to 1000 c.c. The solution should then be well mixed and kept in a dark-blue stoppered bottle. This solution will not keep long, and on this account it is especially desirable that it should not be exposed to the light or air; but if the two solutions of which it is made up are kept separate, and mixed in the proper proportions shortly before use, they may be depended upon to remain unchanged for a considerable time. To standardise this copper test, invert sugar is prepared by Herzfeld's method. The half normal weight (13·024 grams) of pure sugar is dissolved in 70 c.c. of water in a 100 c.c. flask and 5 c.c. of 38 per cent. hydrochloric acid (sp. gr. 1·188) added. Heat

in a water-bath at 70° C., so that in two minutes the solution is at 67°–69° C., and maintain the temperature as close to 69° C. as possible for five minutes, agitating constantly. Cool quickly under the tap and make up to the 100 c.c. mark. The solution polarised is a jacketed tube (200 mm. long) at 20° C. should read – 16·33 (half of – 32·66). 36·5 c.c. of the solution (equal to 4·75 grams of sucrose or 5 grams of invert sugar) are measured from a burette, neutralised with sodium carbonate and diluted to 1000 c.c., 10 c.c. of this solution contain 0·05 gram of invert sugar, and ought to reduce completely an equal volume of the copper test. The amount of raw sugar to be taken in the determination of glucose may vary from 0·5 to 20 grams in 100 c.c. The better plan is to make a comparatively rough preliminary trial with a moderately strong solution, and afterwards a more careful and exact test with a dilute solution. To get sharp results, it is desirable to use not less than 10 c.c. or more than 50 c.c. of sugar solution to decolorise 10 c.c. of the copper test. It is of great importance that the sugar solution should be as colourless as possible, and then the exact point at which the blue colour of the copper test has been entirely removed is not difficult to ascertain. The copper test is measured out by a 10 c.c. pipette, graduated into tenths of a c.c. The sugar solution is placed in a 50 c.c. burette, divided into tenths of a c.c. In carrying out the process it is usual to measure 10 c.c. of the copper test into a flask capable of holding about 200 c.c., and then bring it to the boiling point, when, if the copper test be in good condition, there should be no red deposit formed. The flask is then removed for the moment from the source of heat, and 3 or 4 c.c. of the sugar solution having been run in from the burette, the contents of the flask are made to boil. If any blue colour is left, more sugar solution must be added, a few c.c. at a time, boiling after each addition, until at length the blue colour has quite vanished. The number of c.c. used must then be read off, and from it the percentage of glucose may

be found by a simple calculation. Thus if 50 c.c. of a solution containing 1 gram of sugar in 100 c.c. are required to decolorise 10 c.c. copper test, it implies that 0·5 gram of the sugar tested contains 0·05 gram of glucose, or that there is 10 per cent. of glucose in the sugar.

A doubt sometimes arises, when the sugar solution is not quite colourless, as to the exact point at which the blue colour vanishes, and all the copper is thrown down. In such a case the red deposit is allowed to settle, and a few drops of the clear supernatant liquor are removed by a small pipette to a test tube, or a little may be filtered into the latter. The liquor is then made slightly acid with acetic acid, and a little solution of ferrocyanide of potassium is added, when a brown coloration, or precipitate, of ferrocyanide of copper will be produced if any copper is still present. In working with the copper test, when the copper has been completely thrown down, a slight addition of sugar solution will, on boiling, change the colour of the liquid to yellowish brown, owing to the action of the soda in the Fehling's test upon the glucose present in the raw sugar.

Beet sugars contain little, if any, glucose, and in testing them it is therefore expedient to operate upon a large quantity, say 20 or 25 grams in 100 c.c., and to use only 2 or 3 c.c. of the copper test. Some improved methods of determining small quantities of glucose in beet sugar will be described further on.

Determination of Glucose and Invert Sugar by the Gravimetric Method.—In working by this method it is usual to take about 25 c.c. of Fehling's copper test in a 5 or 6 oz. beaker, dilute it with 50 c.c. of boiling water which has been previously boiled for some time. The beaker should be heated by being placed in a vessel containing boiling water, and after a few minutes a known weight or measure of the solution to be tested (previously clarified and neutralised if requisite) is added, and the water in the outer vessel is boiled for about a quarter of an hour. The Fehling test should be

in excess, which is indicated by the blue colour of the liquid, and if such is not the case, more Fehling's test may be added to restore the blue colour; it is, however, preferable to make a fresh determination, using a smaller quantity of the solution to be tested. The precipitate is allowed to subside, the clear liquid is decanted through a filter, on which the precipitate is afterwards washed with well-boiled boiling water. It is then dried and strongly ignited in an open porcelain crucible for a few minutes, when the red precipitate of suboxide of copper first obtained is converted into black protoxide. To make sure that this conversion is complete, it is advisable to allow the crucible to cool and then to add a few drops of nitric acid, dry, and again ignite, finally weighing as soon as the crucible is cold. The weight of the protoxide of copper thus found, when multiplied by the factor 0·4535, gives the weight of glucose in the amount of sugar solution used.

Determination of Ash.—From 2 to 5 grams of sugar are weighed in a platinum dish, sufficient sulphuric acid is then added to thoroughly moisten the sugar, the mixture being meanwhile stirred with a platinum wire. When there is much moisture in the sugar, the action of the sulphuric acid is very energetic; dry sugar, on the other hand, should be slightly wetted before adding the acid, or should be heated for a few moments with the latter, so as to start the action. The mixture swells up very much, becoming carbonised, and giving off considerable amounts of steam and sulphurous acid. When all action has ceased, the dish should be heated over the flame of a Bunsen burner, or to low redness in a muffle. When there are no more black particles left, that is when the carbon has been entirely consumed, the dish is re-weighed, and its increase of weight gives the amount of sulphated ash in the quantity of sugar taken.

By this mode of procedure, any carbonic acid, etc., which would have been present in the ash had no sulphuric acid been used, is expelled, and the bases are converted into

sulphates, the ash being thereby rendered heavier, as the combining weight of sulphuric acid is greater than that of carbonic acid. To allow for this, it is customary to deduct one-tenth of its weight from the sulphated ash, and the remainder is assumed to represent the ash contained in the weight of sugar taken for analysis.

Determination of Soluble Ash.—Should any insoluble matters such as sand and clay, be present in the raw sugar the soluble ash must be ascertained, since it alone serves to hinder the crystallisation of the sugar. For this purpose, a solution of the raw sugar is made containing 10 grams in 100 c.c., and this is passed through a dry filter, the first portion being returned to the filter. When a sufficient amount of clear liquor has passed through, 20 c.c., equal to 2 grams of the raw sugar, are measured out with a pipette, and transferred to a platinum dish, in which it is evaporated to a pasty condition. It is then allowed to cool, and stirred up after moistening with sulphuric acid, and when the action is over it is incinerated until all the carbonaceous matter has been got rid of, and lastly weighed; one-tenth being deducted as before.

Determination of Insoluble Ash.—The insoluble ash may be obtained by deducting the soluble from the total ash. A more accurate mode, however, is to take 2 to 10 grams of the raw sugar in a beaker, and dissolve the sugar with hot water, allowing it to pass through a filter to which all the insoluble matter is transferred. The contents of the filter are then washed till the sugar is removed, and the filter is then dried, and incinerated in a platinum dish, the increase of weight giving the insoluble ash in the quantity of raw sugar taken.

Determination of Moisture.—Five grams are weighed out in a porcelain dish, and are then heated to 212° F. (100° C.), or a little higher temperature, till the weight is constant.

In operating with low sugars, or with molasses, a crust often forms on heating, and prevents the water from passing off. In such cases, a quantity of finely divided dry sand,

several times the weight of the sugar, is placed in a porcelain dish, together with a small glass or platinum stirrer. The total weight of the dish, sand and stirrer is then taken, and 2 to 5 grams of the raw sugar or molasses are added thereto and well incorporated by stirring. The whole is then heated to 220° F., the contents being stirred from time to time. The escape of moisture may also be greatly facilitated by adding a little alcohol to the mixture of sand and sugar, stirring and then heating very gently at first, and afterwards when the alcohol has gone off, more strongly, say to 220° F. This process may be advantageously repeated once or twice.

Statement of Results.—The results are usually stated under the following heads: sugar, glucose, ash, moisture and undetermined organic matters, etc., the last item being made up by difference. Thus a sample of cane jaggery gave, on analysis, the subjoined results:—

Sugar	79·00
Glucose	6·22
Soluble ash	3·11
Insoluble ash	0·69
Moisture	6·24
Undetermined organic matters	4·74
	100·00
Rendement, or net sugar	57·23

In order to calculate the rendement, or net sugar, which should be obtained from a given sample of sugar or molasses, it is usual to assume that 1 part of glucose prevents 1 part of sugar from crystallising, and 1 part of soluble ash prevents 5 parts of sugar from crystallising. In accordance with this view, it is therefore only necessary to take the percentage of sugar and to deduct from it the amount of glucose and 5 times that of the soluble ash.

Determination of the Alkalinity of the Ash.—It is sometimes necessary to determine the amount of the carbonates of potash and soda present in the ash, and this may be readily done, without taking the trouble to make a complete analysis,

in the following manner. The sugar is heated in a platinum dish without the addition of sulphuric acid, and calcined to a fairly grey ash. The residue is then boiled in water, and the whole is thrown on a filter, and washed two or three times. To the filtrate a few drops of carbonate of ammonia are added, and it is then evaporated to dryness in a platinum basin, and ignited at a low red heat. The contents of the basin are then washed into a flask, and after adding a little litmus, titrated with normal acid, and the results calculated out as carbonate of potash.

Special Processes.—Having dealt with the ordinary and recognised modes of sugar analysis, reference will now be made to certain methods which are used as subsidiary processes in some cases in commercial work, and in other cases only for the purpose of special tests in refineries or sugar factories.

Payen's Process.—The alcohol process which is often called Payen's process, consists in washing the sample on a filter with alcohol of 88 per cent. strength, which has already been saturated with cane sugar and slightly acidified with acetic acid. The washing alcohol, being already saturated with pure sugar, cannot dissolve any more of that substance; but it is capable of dissolving uncrystallisable sugar, and the salts occurring as impurities, while the acid which is present is sufficient in quantity to dissolve almost, if not quite, all the soluble matters which are insoluble in alcohol, and to decompose the sucrates. The test is carried out as follows. Three solutions are prepared, viz. (1) a mixture of absolute alcohol and ether, (2) 88 per cent. alcohol, to which has been added 50 c.c. of acetic acid per litre, and which has been saturated with pure sugar (loaf sugar answers perfectly well), (3) 95 per cent. alcohol, also saturated in the same way with sugar. The sample to be tested is weighed and transferred to a small tube, similar to a chloride of calcium tube, but preferably longer. Solution No. 1 is then passed on to the sugar in quantity about equal to the bulk of the sugar itself, so as not

only to remove the water, but to precipitate any cane sugar which may be in combination, or in solution in the water. If the raw sugar is too moist, it is desirable to dry it previously, so that it does not contain more than 4 to 5 per cent. of moisture. The tube should be provided with a stopcock at the bottom, and the solvents should be allowed to remain in contact with the sugar for a sufficient time.

After 10 to 15 minutes, the liquid may be run off by opening the stopcock, and solution No. 2 added. The sample acted upon in this way will be practically freed from water, and the diluted acetic acid solution will dissolve out any lime-salts which may be present, and so free the sugar from mineral impurities naturally existing in it. This solution is withdrawn in the same way as No. 1, and solution No. 3 is then poured on, a second or third portion of this solution being used if necessary, until it ceases to take up anything more, and the sugar under treatment has become as white as possible. After this, it is necessary to draw air through the tube containing the sugar, in order to remove the alcohol, and the residue of the sample is emptied from the tube into a tared capsule, dried, and weighed, or, if preferred, the crystals of sugar thus obtained may be dissolved in water made up to a definite volume, and polarised. This process appears a complicated one, and it is no doubt difficult of execution by those who are unused to it; but the opinion of some who have employed it is, that the residue thus obtained does really represent very closely the amount of crystallisable sugar which can be obtained by ordinary refining processes. The differences which occur in the execution of the analysis are mainly those due to alteration of temperature and possible changes in the strength of the solutions of sugar employed in washing. A rapid fall in temperature in the laboratory during the process of washing will render the results incorrect, owing to the deposition of sugar on the surface of the crystals of the sample treated.

Fermentation Process.—It is possible to determine the proportion of sugar in a given solution, by fermenting it in contact with yeast and noting the amount of one or both of the following products, viz.: (1) the alcohol produced, and (2) the carbonic acid given off. The mode of carrying out these operations will now be described.

(1) Cane sugar when fermented yields about 51 per cent. of alcohol. The solution of sugar should contain from 12 to 16 per cent. of sugar, and it is best to use not less than from 50 to 100 c.c. This is placed in an apparatus similar to that used in analysing carbonates, and to it a small proportion of pressed fresh yeast (4 to 5 per cent.) is added, the contents of the flask being kept at a temperature of 22° to 25° C. (71·5° to 77° F.) until the fermentation has ceased, which will be in 3 to 4 days. The solution is then distilled to one-third or so; the distillate is weighed and its density ascertained, and from this the amount of alcohol can be found by reference to a table. To get the corresponding amount of sugar, multiply the percentage of alcohol by 2·02 for glucose, or by 1·96 for cane sugar.

(2) The sugar solution is fermented in a similar way, the evolved carbonic acid passing through a tube containing calcium chloride so as to absorb any moisture. The process is continued as long as any gas is given off, and then a current of air previously dried and freed from carbonic acid is drawn through the apparatus. The difference between the weight of the apparatus before and after the fermentation gives the amount of carbonic acid evolved, and to convert this into glucose it is only necessary to multiply by 2·0454, and the result so obtained, when multiplied by 0·95, gives the corresponding weight of cane sugar.

The results obtained by the fermentation process are not always accurate, because secondary fermentation may take place attended with the formation of various bodies.

Determination of the Total Sugar by Fehling's Method.—

Crystallisable sugar in dilute solution when heated with an acid is rapidly changed into invert sugar which is capable of reducing the copper test. The solution of sugar employed for this purpose must be highly dilute, containing only ½ or at the most 1 per cent. of invert sugar. Dissolve 13·024 grm. of sugar in 75 c.c. of water, before making up to bulk add 5 c.c. of hydrochloric acid (sp. gr. 1·19), and heat at 70° C. for seven minutes. Allow to cool; neutralise the acid by the addition of a solution of soda; make up to 100 c.c. with water and well mix. Then proceed exactly as in the determination of glucose, and from the number of c.c.'s required to precipitate 10 c.c. of the copper test, the amount of sugar can be easily calculated. As 95 parts of crystallisable sugar yield on inversion 100 parts of invert sugar, 5 per cent. must be deducted from the result to obtain the correct percentage of the former. If a sample of sugar be tested with Fehling's test before and after inversion, the first result gives the glucose or invert sugar actually contained in it, and the second result includes the first plus the invert sugar produced by the process. Thus, by way of example, if the two results come out 5 per cent. before inversion and 86 after, it is necessary to deduct from the 86 the 5 per cent. of glucose normally present in the sample and then to deduct 5 per cent., or one-twentieth part, from the remaining 81, leaving 76·95, which is the percentage of crystallisable sugar.

Determination of Glucose in Beet Sugars—When beet sugars contain glucose, its amount is usually so small that there is some difficulty in accurately determining it by the ordinary process, involving as it does, in such cases, the use of a very strong solution of the sugar, e.g. 25 grams in 100 c.c., and a very small quantity of copper test, sometimes only 1 c.c. When less than 0·05 per cent. is found, it is described as traces only.

Several processes have been devised to overcome the difficulty, and the two best of these are those of J. W. Biggart

and T. L. Patterson. The first-named chemist makes use of a standard solution of invert sugar of such strength that 1 c.c. of it corresponds to 0·001 gram of uncrystallisable sugar, or 25 c.c. of it to 5 c.c. of the copper test. To carry out this process, introduce 15 grams of the sugar to be examined into a 100 c.c. flask with a small quantity of water; add 25 c.c. of the standard invert sugar, and after dissolving the sugar make up to 100 c.c. Well mix the solution, and having poured it into a burette, test its strength by using 5 c.c. of copper test, and carry out the rest of the process just as in the ordinary mode of determining glucose. If the beet sugar tested contains no glucose, it will take 100 c.c. of the solution to decolorise 5 c.c. copper test, but, if glucose be present, a smaller number of c.c. will suffice. From the number thus found the percentage of glucose in the beet sugar can be readily calculated.

Patterson's Process.—This process is one of backward titration, in which a measured volume of the copper test is boiled with a weighed quantity of the sugar under examination, and the unreduced oxide of copper determined by means of a standard solution of invert sugar (containing 0·002 gram of invert sugar per c.c.), the amount of which requisite to reduce 10 c.c. of copper test is carefully determined. In carrying out this process, 10 grams of the beet sugar to be examined are placed in a 250 c.c. flask; 40 c.c. of water are added, and the sugar dissolved by a gentle heat; 10 c.c. of the copper test are next added, and the contents of the flask boiled, when the uncrystallisable sugar or glucose present will reduce a portion of the oxide of copper. What remains is completely reduced by running into the flask from a burette a standard solution of invert sugar. It is evident that if the sugar under examination contained any glucose, a smaller number of c.c. of standard invert sugar solution will be needed in this titration than was required in titrating the copper test when no sugar was added. It is then only necessary to deduct the former number from

the latter to get the number of c.c. of standard invert sugar solution, which contains the same amount of invert sugar as 10 grams of the sample. This difference × 0·002 × 10, or × 0·02, gives the percentage of glucose in the sugar taken. For example, 26 c.c. of the standard invert sugar solution were required to reduce 10 c.c. of copper test, but after the addition of 10 grams of a sample of beetroot sugar, only 21 c.c. were needed to attain the same result. Therefore 26 − 21 = 5 c.c. of invert sugar solution, and 5 × 0·02 = 0·10 per cent. of glucose in the sample. For a full account of the two processes just described see the 'Sugar Cane' for March 1885.

Inversion. Clerget's Method.—Samples of sugar and saccharine matter often contain other substances which have an optical rotary effect in the polariscope, and in such cases it is necessary to employ the process of inversion. Solutions of cane sugar left in contact with air, especially when dilute, undergo inversion, and in presence of acids this process proceeds with much greater rapidity. In the latter case the rate of inversion is principally dependent upon the strength of the sugar solution, the amount and also the kind of acid used, the temperature to which the mixture is heated, and the time during which heat is applied.

Herzfeld's method of inverting sugar for polariscope readings is as follows: 13·024 grams of sugar or syrup are dissolved in 75 c.c. of water in a 100 c.c. flask. 5 c.c. of hydrochloric acid (sp. gr. 1·188) are added. The flask is then placed in a water bath at 70° C., the heating being so arranged that the solution takes two minutes to reach 67° to 69° C., and the temperature maintained as close to 69° C. for five minutes longer, agitating constantly. The solution is now cooled quickly and made up to the 100 c.c. mark. The solution is polarised in a 200 mm. jacketed tube provided with a sensitive thermometer reading to tenths of a degree Centigrade, the readings being taken at 20° C. Pure sugar should read −16·33. The reading is doubled to give the

result corresponding to the normal weight, 26·048 grams. The doubled reading is the polarisation after inversion.

For the polarisation before inversion 26·048 grams are dissolved in water in a 100 c.c. flask, defecated with basic lead acetate and alumina, made up to the mark when cooled to 20° C., filtered and read off in the polariscope.

If the readings before and after inversion are both either to the right or left of the polariscope scale, the smaller is deducted from the greater to give the number of degrees or angle of rotation. If, however, after inversion, the right-handed rotation is changed to left, so that the two readings are right and left of zero, their sum is taken, and the percentage of cane sugar originally present is found by the formula

$$C = \frac{100\ (P - I)}{142\ 66 - \frac{1}{2}t}$$

where C is the cane sugar sought, P the direct polarisation, and I the polarisation after inversion, t the degrees Centigrade. Readings should be taken at as near 20° C. as possible.

To illustrate the use of the formula by an example, let us suppose the original sugar solution gave a polarisation of 67·9, and that after inversion it gave a reading of minus 12·5; $-12{\cdot}5 \times 2 = -25$, the polarisation after inversion. The temperature of observation being 20° C. we have

$$C = \frac{100 \times (67{\cdot}9 + 25)}{142{\cdot}66 - (\frac{1}{2} \times 20)} = \frac{92\ 90}{132{\cdot}66} = 70{\cdot}03.$$

The sample of sugar therefore contained 70·03 per cent. of pure sugar.

Clerget's tables were arranged for the normal weight of 16·35 grams of sugar in 100 c.c., reading 100 on the Soleil-Duboscq polariscope used in France. The procedure is on similar lines to the method described above.

Clerget's Tables for the Analyses of Saccharine Substances.

Sums and Differences of the Deviations, Direct and Inverse, taken at the Temperatures (Cent.).																										Per cent. sought.	
10°	11°	12°	13°	14°	15°	16°	17°	18°	19°	20°	21°	22°	23°	24°	25°	26°	27°	28°	29°	30°	31°	32°	33°	34°	35°	By wt. A.	By vol. B.
																											gram.
1·4	1·4	1·4	1·4	1·4	1·4	1·4	1·3	1·3	1·3	1·3	1·3	1·3	1·3	1·3	1·3	1·3	1·3	1·3	1·3	1·3	1·3	1·3	1·3	1·3	1·3	1	1·64
2·8	2·8	2·8	2·7	2·7	2·7	2·7	2·7	2·7	2·7	2·7	2·7	2·6	2·6	2·6	2·6	2·6	2·6	2·6	2·6	2·6	2·6	2·6	2·6	2·6	2·6	2	3·29
4·2	4·1	4·1	4·1	4·1	4·1	4·1	4·1	4·0	4·0	4·0	4·0	4·0	4·0	4·0	3·9	3·9	3·9	3·9	3·9	3·9	3·8	3·8	3·8	3·8	3·8	3	4·94
5·6	5·5	5·5	5·5	5·5	5·5	5·4	5·4	5·4	5·4	5·4	5·3	5·3	5·3	5·3	5·3	5·2	5·2	5·2	5·2	5·2	5·1	5·1	5·1	5·1	5·1	4	6·58
6·9	6·9	6·9	6·9	6·8	6·8	6·8	6·8	6·7	6·7	6·7	6·7	6·6	6·6	6·6	6·6	6·5	6·5	6·5	6·5	6·4	6·4	6·4	6·4	6·3	6·3	5	8·23
8·3	8·3	8·3	8·2	8·2	8·2	8·2	8·1	8·1	8·1	8·0	8·0	8·0	7·9	7·9	7·9	7·9	7·8	7·8	7·8	7·7	7·7	7·7	7·7	7·6	7·6	6	9·88
9·7	9·7	9·7	9·6	9·6	9·5	9·5	9·5	9·4	9·4	9·4	9·3	9·3	9·3	9·2	9·2	9·2	9·1	9·1	9·1	9·0	9·0	9·0	8·9	8·9	8·8	7	11·52
11·1	11·1	11·0	11·0	11·0	10·9	10·9	10·8	10·8	10·8	10·7	10·7	10·6	10·6	10·6	10·5	10·5	10·4	10·4	10·4	10·3	10·3	10·3	10·2	10·2	10·1	8	13·17
12·5	12·5	12·4	12·4	12·3	12·3	12·2	12·2	12·1	12·1	12·1	12·0	12·0	11·9	11·9	11·8	11·8	11·7	11·7	11·6	11·6	11·6	11·5	11·5	11·4	11·4	9	14·82
13·9	13·8	13·8	13·7	13·7	13·6	13·6	13·5	13·5	13·4	13·4	13·3	13·3	13·2	13·2	13·1	13·1	13·0	13·0	12·9	12·9	12·8	12·8	12·7	12·7	12·6	10	16·47
15·3	15·2	15·2	15·1	15·1	15·0	15·0	14·9	14·8	14·8	14·7	14·7	14·6	14·6	14·5	14·5	14·4	14·3	14·3	14·2	14·2	14·1	14·1	14·0	14·0	13·9	11	18·11
16·7	16·6	16·6	16·5	16·4	16·4	16·3	16·3	16·2	16·1	16·1	16·0	16·0	15·9	15·8	15·8	15·7	15·7	15·6	15·5	15·5	15·4	15·4	15·3	15·2	15·2	12	19·76
18·1	18·0	17·9	17·9	17·8	17·7	17·7	17·6	17·5	17·5	17·4	17·3	17·3	17·2	17·2	17·1	17·0	17·0	16·9	16·8	16·8	16·7	16·6	16·6	16·5	16·4	13	21·41
19·5	19·4	19·3	19·2	19·2	19·1	19·0	19·0	18·9	18·8	18·8	18·7	18·6	18·5	18·5	18·4	18·3	18·3	18·2	18·1	18·1	18·0	17·9	17·8	17·8	17·7	14	23·05
20·8	20·8	20·7	20·6	20·5	20·5	20·4	20·3	20·2	20·2	20·1	20·0	19·9	19·9	19·8	19·7	19·6	19·6	19·5	19·4	19·3	19·3	19·2	19·1	19·0	19·0	15	24·70
22·2	22·2	22·1	22·0	21·9	21·8	21·8	21·7	21·6	21·5	21·4	21·4	21·3	21·2	21·1	21·0	21·0	20·9	20·8	20·7	20·6	20·6	20·5	20·4	20·3	20·2	16	26·35
23·6	23·5	23·5	23·4	23·3	23·2	23·1	23·0	22·9	22·9	22·8	22·7	22·6	22·5	22·4	22·3	22·3	22·2	22·1	22·0	21·9	21·8	21·7	21·7	21·6	21·5	17	28·00
25·0	24·9	24·8	24·7	24·7	24·6	24·5	24·4	24·3	24·2	24·1	24·0	23·9	23·8	23·8	23·7	23·6	23·5	23·4	23·3	23·2	23·1	23·0	22·9	22·9	22·8	18	29·64
26·4	26·3	26·2	26·1	26·0	25·9	25·8	25·7	25·6	25·5	25·5	25·4	25·3	25·2	25·1	25·0	24·9	24·8	24·7	24·6	24·5	24·4	24·3	24·2	24·1	24·0	19	31·29
27·8	27·7	27·6	27·5	27·4	27·3	27·2	27·1	27·0	26·9	26·8	26·7	26·6	26·5	26·4	26·3	26·2	26·1	26·0	25·9	25·8	25·7	25·6	25·5	25·4	25·3	20	32·94
29·2	29·1	29·0	28·9	28·8	28·7	28·6	28·4	28·3	28·2	28·1	28·0	27·9	27·8	27·7	27·6	27·5	27·4	27·3	27·2	27·1	27·0	26·9	26·8	26·7	26·6	21	34·58
30·6	30·5	30·4	30·2	30·1	30·0	29·9	29·8	29·7	26·6	29·5	29·4	29·3	29·1	29·0	28·9	28·8	28·7	28·6	28·5	28·4	28·3	28·2	28·0	27·9	27·8	22	36·23
32·0	31·8	31·7	31·6	31·5	31·4	31·3	31·2	31·0	30·9	30·8	30·7	30·6	30·5	30·4	30·2	30·1	30·0	29·9	29·8	29·7	29·5	29·5	29·3	29·2	29·1	23	37·88
33·4	33·2	33·1	33·0	32·9	32·8	32·6	32·5	32·4	32·3	32·2	32·0	31·9	31·8	31·7	31·6	31·4	31·3	31·2	31·1	30·9	30·8	30·7	30·6	30·5	30·4	24	39·53
34·7	34·6	34·5	34·4	34·2	34·1	34·0	33·9	33·7	33·6	33·5	33·4	33·2	33·1	33·0	32·9	32·7	32·6	32·5	32·4	32·2	32·1	32·0	31·9	31·7	31·6	25	41·17
36·1	36·0	35·9	35·7	35·6	35·5	35·4	35·2	35·1	35·0	34·8	34·7	34·6	34·4	34·3	34·2	34·1	33·9	33·8	33·7	33·5	33·4	33·3	33·1	33·0	32·9	26	42·82
37·5	37·4	37·3	37·1	37·0	36·8	36·7	36·6	36·4	36·3	36·2	36·1	35·9	35·8	35·6	35·5	35·4	35·2	35·1	35·0	34·8	34·7	34·6	34·4	34·3	34·1	27	44·47
38·9	38·8	38·6	38·5	38·4	38·2	38·1	37·9	37·8	37·7	37·5	37·4	37·2	37·1	37·0	36·8	36·7	36·5	36·4	36·3	36·1	36·0	35·8	35·7	35·6	35·4	28	46·11
40·3	40·2	40·0	39·9	39·7	39·6	39·4	39·3	39·1	39·0	38·9	38·7	38·6	38·4	38·3	38·1	38·0	37·8	37·7	37·5	37·4	37·3	37·1	37·0	36·8	36·7	29	47·76
41·7	41·5	41·4	41·2	41·1	40·9	40·8	40·6	40·5	40·3	40·2	40·0	39·9	39·7	39·6	39·4	39·3	39·1	39·0	38·8	38·7	38·5	38·4	38·2	38·1	37·9	30	49·41
43·1	42·9	42·8	42·6	42·5	42·3	42·2	42·0	41·8	41·7	41·5	41·4	41·2	41·1	40·9	40·8	40·6	40·4	40·3	40·1	39·9	39·8	39·7	39·5	39·4	39·2	31	51·06
44·5	44·3	44·2	44·0	43·8	43·7	43·5	43·4	43·2	43·0	42·9	42·7	42·6	42·4	42·2	42·1	41·9	41·8	41·6	41·4	41·3	41·1	41·0	40·8	40·6	40·5	32	52·70
45·9	45·7	45·5	45·4	45·2	45·0	44·9	44·7	44·5	44·4	44·2	44·0	43·9	43·7	43·6	43·4	43·2	43·1	42·9	42·7	42·6	42·4	42·2	42·1	41·9	41·7	33	54·35

CLERGET'S TABLES FOR THE ANALYSES OF SACCHARINE SUBSTANCES—*continued.*

Sums and Differences of the Deviations, Direct and Inverse, taken at the Temperatures (Cent.).																									Per cent. sought.	
10°	11°	12°	13°	14°	15°	16°	17°	18°	19°	20°	21°	22°	23°	24°	25°	26°	27°	28°	29°	30°	31°	32°	33°	34°	35°	By wt. A.	By vol. B.
																											gram.
47·3	47·1	46·9	46·7	46·6	46·4	46·2	46·1	45·9	45·7	45·6	45·4	45·2	45·0	44·9	44·7	44·5	44·4	44·2	44·0	43·9	43·7	43·5	43·3	43·2	43·0	34	56·00
48·6	48·5	48·3	48·1	47·9	47·8	47·6	47·4	47·2	47·1	46·9	46·7	46·5	46·4	46·2	46·0	45·8	45·7	45·5	45·3	45·1	45·0	44·8	44·6	44·4	44·3	35	57·64
50·0	49·9	49·7	49·5	49·3	49·1	49·0	48·8	48·6	48·4	48·2	48·1	47·9	47·7	47·5	47·3	47·2	47·0	46·8	46·6	46·4	46·3	46·1	45·9	45·7	45·5	36	59·29
51·4	51·2	51·1	50·9	50·7	50·5	50·3	50·1	49·9	49·8	49·6	49·4	49·2	49·0	48·8	48·6	48·5	48·3	48·1	47·9	47·7	47·5	47·4	47·2	47·0	46·8	37	60·94
52·8	52·6	52·4	52·2	52·1	51·9	51·7	51·5	51·3	51·1	50·9	50·7	50·5	50·3	50·2	50·0	49·8	49·6	49·4	49·2	49·0	48·8	48·7	48·4	48·3	48·1	38	62·58
54·2	54·0	53·8	53·6	53·4	53·2	53·0	52·8	52·6	52·4	52·3	52·1	51·9	51·7	51·5	51·3	51·1	50·9	50·7	50·5	50·3	50·1	49·9	49·7	49·5	49·3	39	64·23
55·6	55·4	55·2	55·0	54·8	54·6	54·4	54·2	54·0	53·8	53·6	53·4	53·2	53·0	52·8	52·6	52·4	52·2	52·0	51·8	51·6	51·4	51·2	51·0	50·8	50·6	40	65·88
57·0	56·8	56·6	56·4	56·2	56·0	55·8	55·5	55·3	55·1	54·9	54·7	54·5	54·3	54·1	53·9	53·7	53·5	53·3	53·1	52·9	52·7	52·5	52·3	52·1	51·9	41	67·53
58·4	58·2	58·0	57·5	57·5	57·3	57·1	56·9	56·7	56·5	56·3	56·1	55·9	55·6	55·4	55·2	55·0	54·8	54·6	54·4	54·2	54·0	53·8	53·5	53·3	53·1	42	69·17
59·8	59·5	59·3	59·1	58·9	58·7	58·5	58·3	58·0	57·8	57·6	57·4	57·2	57·0	56·8	56·5	56·3	56·1	55·9	55·7	55·5	55·2	55·0	54·8	54·6	54·4	43	70·82
61·2	60·9	60·7	60·5	60·3	60·1	59·8	59·6	59·4	59·2	59·0	58·7	58·5	58·3	58·1	57·9	57·6	57·4	57·2	57·0	56·8	56·5	56·3	56·1	55·9	55·7	44	72·47
62·5	62·3	62·1	61·9	61·6	61·4	61·2	61·0	60·7	60·5	60·3	60·1	59·8	59·6	59·4	59·2	58·9	58·7	58·5	58·3	58·0	57·8	57·6	57·4	57·1	56·9	45	74·11
63·9	63·7	63·5	63·2	63·0	62·8	62·6	62·3	62·1	61·9	61·6	61·4	61·2	60·9	60·7	60·5	60·3	60·0	59·8	59·6	59·3	59·1	58·9	58·6	58·4	58·2	46	75·76
65·3	65·1	64·9	64·6	64·4	64·1	63·9	63·7	63·4	63·2	63·0	62·7	62·5	62·3	62·0	61·8	61·6	61·3	61·1	60·9	60·6	60·4	60·2	59·9	59·7	59·4	47	77·41
66·7	66·5	66·2	66·0	65·8	65·5	65·3	65·0	64·8	64·6	64·3	64·1	63·8	63·6	63·4	63·1	92·9	62·6	62·4	62·2	61·9	61·7	61·4	61·2	61·0	60·7	48	79·06
68·1	67·9	67·6	67·4	67·1	66·9	66·6	66·4	66·1	65·9	65·7	65·4	65·2	64·9	64·7	64·4	64·2	63·9	63·7	63·4	63·2	63·0	62·7	62·5	62·2	62·0	49	80·70
69·5	69·2	69·0	68·7	68·5	68·2	68·0	67·7	67·5	67·2	67·0	66·7	66·5	66·2	66·0	65·7	65·5	65·2	65·0	64·7	64·5	64·2	64·0	63·7	63·5	63·2	50	82·35
70·9	70·6	70·4	70·1	69·9	69·6	69·4	69·1	68·8	68·6	68·3	68·1	67·8	67·6	67·3	67·1	66·8	66·5	66·3	66·0	65·8	65·5	65·3	65·0	64·8	64·5	51	84·00
72·3	72·0	71·8	71·5	71·2	71·0	70·7	70·5	70·2	69·9	69·7	69·4	69·2	68·9	68·6	68·4	68·1	67·9	67·6	67·3	67·1	66·8	66·6	66·3	66·0	65·8	52	85·64
73·7	73·4	73·1	72·9	72·6	72·3	72·1	71·8	71·5	71·3	71·0	70·7	70·5	70·2	70·0	69·7	69·4	69·2	68·9	68·6	68·4	68·1	67·8	67·6	67·3	67·0	53	87·29
75·1	74·8	74·5	74·2	74·0	73·7	73·4	73·2	72·9	72·6	72·4	72·1	71·8	71·5	71·3	71·0	70·7	70·5	70·2	69·9	69·7	69·4	69·1	68·8	68·6	68·3	54	88·94
76·4	76·2	75·9	75·6	75·3	75·1	74·8	74·5	74·2	74·0	73·7	73·4	73·1	72·9	72·6	72·3	72·0	71·8	71·5	71·2	70·9	70·7	70·4	70·1	69·8	69·6	55	90·59
77·8	77·6	77·3	77·0	76·7	76·3	76·2	75·9	75·6	75·3	75·0	74·8	74·5	74·2	73·9	73·6	73·4	73·1	72·8	72·5	72·2	72·0	71·7	71·4	71·1	70·8	56	92·23
79·2	79·0	78·7	78·4	78·1	77·8	77·5	77·2	76·9	76·7	76·4	76·1	75·8	75·5	75·2	74·9	74·7	74·4	74·1	73·8	73·5	73·2	73·0	72·7	72·4	72·1	57	93·88
80·6	80·3	80·0	79·7	79·5	79·2	78·9	78·6	78·3	78·0	77·7	77·4	77·1	76·8	76·6	76·3	76·0	75·7	75·4	75·1	74·8	74·5	74·2	73·9	73·7	73·4	58	95·53
82·0	81·7	81·4	81·1	80·8	80·5	80·2	79·9	79·6	79·3	79·1	78·8	78·5	78·2	77·9	77·6	77·3	77·0	76·6	76·4	76·1	75·8	75·5	75·2	74·9	74·6	59	97·17
83·4	83·1	82·8	82·5	82·2	81·9	81·6	81·3	81·0	80·7	80·4	80·1	79·8	79·5	79·2	78·9	78·6	78·3	78·0	77·7	77·4	77·1	76·8	76·5	76·2	75·9	60	98·82
84·8	84·5	84·2	83·9	83·6	83·3	83·0	82·6	82·3	82·0	81·7	81·4	81·1	80·8	80·5	80·2	79·9	79·6	79·3	79·0	78·7	78·4	78·1	77·8	77·5	77·2	61	100·47
86·2	85·9	85·6	85·2	84·9	84·6	84·3	84·0	83·7	83·4	83·1	82·8	82·5	82·1	81·8	81·5	81·2	80·9	80·6	80·3	80·0	79·7	79·4	79·0	78·7	78·4	62	102·12
87·6	87·2	86·9	86·5	86·3	86·0	85·7	85·4	85·0	84·7	84·4	84·1	83·8	83·5	83·2	82·8	82·5	82·2	81·9	81·6	81·3	80·9	80·6	80·3	80·0	79·7	63	103·76
89·0	88·6	88·3	88·0	87·7	87·4	87·0	86·7	86·4	86·1	85·8	85·4	85·1	84·8	84·5	84·2	83·8	83·5	83·2	82·9	82·6	82·2	81·9	81·6	81·3	81·0	64	105·41
90·3	90·0	89·7	89·4	89·0	88·7	88·4	88·1	87·7	87·4	87·1	86·8	86·4	86·1	85·8	85·5	85·1	84·8	84·5	84·2	83·8	83·5	83·2	82·9	82·5	82·2	65	107·06
91·7	91·4	91·1	90·7	90·4	90·1	89·8	89·4	89·1	88·8	88·4	88·1	87·8	87·7	87·1	86·8	86·5	86·1	85·8	85·5	85·1	84·8	84·5	84·1	83·8	83·5	66	108·70

CLERGET'S TABLES FOR THE ANALYSES OF SACCHARINE SUBSTANCES—*continued.*

Sums and Differences of the Deviations, Direct and Inverse, taken at the Temperatures (Cent.).																										Per cent. sought.	
10°	11°	12°	13°	14°	15°	16°	17°	18°	19°	20°	21°	22°	23°	24°	25°	26°	27°	28°	29°	30°	31°	32°	33°	34°	35°	By wt. A.	By vol. B.
																											gram.
93·1	92·8	92·5	92·1	91·8	91·4	91·1	90·8	90·4	90·1	89·8	89·4	89·1	88·8	88·4	88·1	87·8	87·4	87·1	86·8	86·4	86·1	85·8	85·4	85·1	84·8	67	110·35
94·5	94·2	93·8	93·5	93·2	92·8	92·5	92·1	91·8	91·5	91·1	90·8	90·4	90·1	89·8	89·4	89·1	88·7	88·4	88·1	87·7	87·4	87·0	86·7	86·4	86·0	68	112·00
95·9	95·6	95·2	94·9	94·5	94·1	93·8	93·5	93·1	92·8	92·5	92·1	91·8	91·4	91·1	90·7	90·4	90·0	89·7	89·3	89·0	88·7	88·3	88·0	87·6	87·3	69	113·64
97·3	96·9	96·6	96·2	95·9	95·5	95·2	94·8	94·5	94·1	93·8	93·4	93·1	92·7	92·4	92·0	91·7	91·3	91·0	90·6	90·3	89·9	89·6	89·2	88·9	88·5	70	115·29
98·7	98·3	98·0	97·6	97·3	96·9	96·6	96·2	95·8	95·5	95·1	94·8	94·4	94·1	93·7	93·4	93·0	92·6	92·3	91·9	91·6	91·2	90·9	90·5	90·2	89·8	71	116·94
100·1	99·7	99·4	99·0	98·6	98·3	97·9	97·9	97·2	96·8	96·5	96·1	95·8	95·4	95·0	94·7	94·3	94·0	93·6	93·2	92·9	92·5	92·2	91·8	91·4	91·1	72	118·59
101·5	101·1	100·7	100·4	100·0	99·6	99·3	98·9	98·5	98·2	97·8	97·4	97·1	96·7	96·4	96·0	95·6	95·3	94·9	94·5	94·2	93·8	93·4	93·1	92·7	92·3	73	120·23
102·9	102·5	102·1	101·7	101·4	101·0	100·6	100·3	99·9	99·5	99·2	98·8	98·4	98·0	97·7	97·3	96·9	96·6	96·2	95·8	95·5	95·1	94·7	94·3	94·0	93·6	74	121·88
104·2	103·9	103·5	103·1	102·7	102·4	102·0	101·6	101·2	100·9	100·5	100·1	99·7	99·4	99·0	98·6	98·2	97·9	97·5	97·1	96·7	96·4	96·0	95·6	95·2	94·9	75	123·53
105·6	105·3	104·9	104·5	104·1	103·7	103·4	103·0	102·6	102·2	101·8	101·5	101·1	100·7	100·3	99·9	99·6	99·2	98·8	98·4	98·0	97·7	97·3	96·9	96·5	96·1	76	125·17
107·0	106·6	106·3	105·9	105·5	105·1	104·7	104·3	103·9	103·6	103·2	102·8	102·4	102·0	101·6	101·2	100·9	100·5	100·1	99·7	99·3	98·9	98·6	98·2	97·8	97·4	77	126·82
108·4	108·0	107·6	107·2	106·9	106·5	106·1	105·7	105·3	104·9	104·5	104·1	103·7	103·3	103·0	102·6	102·2	101·8	101·4	101·0	100·7	100·2	99·8	99·4	99·1	98·7	78	128·47
109·8	109·4	109·0	108·6	108·2	107·8	107·4	107·0	106·6	106·2	105·9	105·5	105·1	104·7	104·3	103·9	103·5	103·1	102·7	102·3	101·9	101·5	101·1	100·7	100·3	99·9	79	130·12
111·2	110·8	110·4	110·0	109·6	109·2	108·8	108·4	108·0	107·6	107·2	106·8	106·4	106·0	105·6	105·2	104·8	104·4	104·0	103·6	103·2	102·8	102·4	102·0	101·6	101·2	80	131·76
112·6	112·2	111·8	111·4	111·0	110·6	110·2	109·7	109·3	108·9	108·5	108·1	107·7	107·3	106·9	106·5	106·1	105·7	105·3	104·9	104·6	104·1	103·7	103·2	102·9	102·5	81	133·41
114·0	113·6	113·2	112·7	112·3	111·9	111·5	111·1	110·7	110·3	109·9	109·5	109·1	108·6	108·2	107·8	107·4	107·0	106·6	106·2	105·9	105·4	105·0	104·5	104·1	103·7	82	135·06
115·4	114·9	114·5	114·1	113·7	113·1	112·9	112·5	112·0	111·6	111·2	110·8	110·4	110·0	109·6	109·1	108·9	108·3	107·9	107·5	107·2	106·6	106·2	105·8	105·4	105·0	83	136·70
116·8	116·3	115·9	115·5	115·1	114·7	114·2	113·8	113·4	113·0	112·6	112·1	111·7	111·3	110·9	110·5	110·0	109·6	109·2	108·8	108·5	107·9	107·5	107·1	106·6	106·3	84	138·35
118·1	117·7	117·3	116·9	116·4	116·0	115·6	115·2	114·7	114·3	113·9	113·5	113·0	112·6	112·2	111·8	111·3	110·9	110·5	110·1	109·7	109·2	108·8	108·4	107·9	107·5	85	140·00
119·5	119·1	118·7	118·2	117·8	117·4	117·0	116·5	116·1	115·7	115·2	114·8	114·4	113·9	113·5	113·1	112·7	112·2	111·8	111·4	111·0	110·5	110·1	109·6	109·2	108·8	86	141·65
120·9	120·5	120·1	119·6	119·2	118·7	118·3	117·9	117·4	117·0	116·6	116·1	115·7	115·3	114·8	114·4	114·0	113·5	113·1	112·7	112·3	111·8	111·4	110·9	110·5	110·0	87	143·29
122·3	121·9	121·4	121·0	120·6	120·1	119·7	119·2	118·8	118·4	117·9	117·5	117·0	116·6	116·2	115·7	115·3	114·8	114·4	114·0	113·6	113·1	112·6	112·2	111·8	111·3	88	144·94
123·7	123·2	122·8	122·4	121·9	121·5	120·9	120·6	120·1	119·7	119·2	118·8	118·4	117·9	117·5	117·0	116·6	116·1	115·7	115·2	114·9	114·4	113·9	113·5	113·0	112·6	89	146·59
125·1	124·6	124·2	123·7	123·3	122·8	122·4	121·9	121·5	121·0	120·6	120·1	119·7	119·2	118·8	118·3	117·6	117·4	117·0	116·5	116·2	115·6	115·2	114·7	114·3	113·9	90	148·23
126·5	126·0	125·6	125·1	124·7	124·2	123·8	123·3	122·8	122·4	121·9	121·5	121·0	120·6	120·1	119·7	119·2	118·7	118·3	117·8	117·5	116·9	116·5	116·0	115·6	115·1	91	149·88
127·9	127·4	127·0	126·5	126·0	125·6	125·1	124·7	124·2	123·7	123·3	122·8	122·4	121·9	121·4	121·0	120·3	120·1	119·6	119·1	118·8	118·2	117·8	117·3	116·8	116·4	92	151·53
129·3	128·8	128·3	127·9	127·4	126·9	126·5	126·0	125·5	125·1	124·6	124·1	123·7	123·2	122·8	122·3	121·8	121·4	120·9	120·4	120·1	119·5	119·0	118·6	118·1	117·6	93	153·18
130·7	130·2	129·7	129·2	128·8	128·3	127·8	127·4	126·9	126·4	126·0	125·5	125·9	124·5	124·1	123·6	123·1	122·7	122·2	121·7	121·4	120·8	120·3	119·8	119·4	118·9	94	154·82
132·0	131·6	131·1	130·6	130·1	129·7	129·2	128·7	128·2	127·8	127·3	126·8	126·3	125·9	125·4	124·9	124·4	124·0	123·5	123·0	122·6	122·1	121·6	121·1	120·6	120·2	95	156·47
133·4	133·0	132·5	132·0	131·5	131·0	130·6	130·1	129·6	129·1	128·6	128·2	127·7	127·2	126·7	126·2	125·8	125·3	124·8	124·3	123·9	123·4	122·9	122·4	121·9	121·4	96	158·12
134·8	134·3	133·9	133·4	132·9	132·4	131·9	131·4	130·9	130·5	130·0	129·5	129·0	128·5	128·0	127·5	127·1	126·6	126·1	125·6	125·2	124·6	124·2	123·7	123·6	122·7	97	159·76
136·2	135·7	135·2	134·7	134·3	133·8	133·3	132·8	132·3	131·8	131·3	130·8	130·3	129·8	129·4	128·9	128·4	127·9	127·4	126·9	126·5	125·9	125·4	124·9	124·5	124·0	98	161·41
137·6	137·1	136·6	136·1	135·6	135·1	134·6	134·1	133·6	133·1	132·7	132·2	131·3	131·2	130·7	130·2	129·7	129·2	128·7	128·2	127·8	127·2	126·7	126·2	125·7	125·2	99	163·06
139·0	138·5	138·0	137·5	137·0	136·5	136·0	135·5	135·0	134·5	134·0	133·5	133·0	132·5	132·0	131·5	131·0	130·5	130·0	129·5	129·0	128·5	128·0	127·5	127·0	126·5	100	164·71

To illustrate the use of this table by an example, let us suppose that the original sugar solution gave a polarisation of 65, and that after inversion it gave a reading of minus 31 at 12° C. The sum of 65 and 31 is 96, and on looking vertically down the table under the temperature 12° for the number which most nearly approaches 96, the figure found is 96·6, in a horizontal line with which, and in the last vertical column but one, marked A, will be seen the number 70, indicating that the raw sugar submitted to examination contained 70 per cent. of actual crystallisable sugar. On the same horizontal line, and in the last vertical column, marked B, will be seen the figure 115·29, indicating that a litre of the sugar solution operated upon contains 115·29 grams of pure sugar.

Mode of Calculation without the use of the table.—It was found by Clerget that the normal solution used for the Soleil-Duboscq polariscope, containing 16·35 grams of sugar in 100 c.c., and which read 100° in the polariscope, gave, after inversion, a reading of 44° to the left at 0° C., showing a difference in rotation of 144 produced by the inversion. The degree given in the polariscope after inversion varies to a considerable extent with the temperature—in fact, the deviation decreases by very nearly half a degree of the Soleil-Duboscq scale for each rise of 1° C. From the preceding data the following formula is deduced :—

$$144 - \tfrac{1}{2}\,T : 100 :: s : R$$
$$288 - T : 200 :: s : R,$$

whence

$$R = \frac{200\,s}{288 - T}.$$

In this formula s signifies the sum or difference of the readings in the polariscope before and after inversion (the sum being taken when the readings are in opposite directions, and the difference when in the same direction) ; T the tem-

perature of the inverted solution when in the polariscope; and R the percentage of sugar sought. A more correct formula is given on page 683.

Raffinose.—Low products of beetroot sugar factories, especially where sugar is recovered from molasses by the sucrate processes, frequently contain raffinose, a sugar with a polarisation of 185·2, cane sugar being 100. Raffinose undergoes inversion into levulose, dextrose and galactose, the polarisation being reduced to +51·24 when subjected to the Clerget inversion. The following formulæ serve for the calculation of the cane sugar and the raffinose, reducing sugars being supposed absent.

P is the direct polarisation; I, the polarisation (double reading) after inversion; R, raffinose; C, cane sugar.

$$C = \frac{(0{\cdot}5124 \times P) + I}{0{\cdot}8390} \qquad R = \frac{P - C}{1{\cdot}852}.$$

Cane and Beet Juices.—In the ordinary average work of the factory, the percentage of sugar present in the juice being treated is determined mainly by means of the hydrometer, according to the following tables:—

The table gives the proportions of sugar present in the juice as indicated by the specific gravity or the degrees B. of the solution. The B. degrees are more frequently used in sugar-factories than the actual specific gravity, and this table gives the data for the comparison between the two. In either case, the specific gravity or B. may be determined by the specific-gravity bottle or the hydrometer spindle; and if the usual precautions are taken, the results are directly comparable. The use of the specific-gravity bottle is, of course, the more correct method of the two.

TABLE SHOWING THE RELATION OF PERCENTAGES, SPECIFIC GRAVITIES, AND DEGREES BAUMÉ IN CANE-SUGAR SOLUTIONS.

Per cent. of Sugar	Specific Gravity	Degree Baumé	Per cent. of Sugar	Specific Gravity	Degree Baumé	Per cent. of Sugar	Specific Gravity	Degree Baumé	Per cent. of Sugar	Specific Gravity	Degree Baumé
0·0	1·0000	0·0	4·2	1·0165	2·3	8·4	1·0335	4·7	12·6	1·0510	7·0
·1	1·0003	0·06	·3	1·0169	2·4	·5	1·0339	4·7	·7	1·0514	7·05
·2	1·0007	0·11	·4	1·0173	2·4	·6	1·0343	4·8	·8	1·0519	7·1
·3	1·0011	0·17	·5	1·0177	2·5	·7	1·0347	4·8	·9	1·0523	7·2
·4	1·0015	0·22	·6	1·0181	2·6	·8	1·0351	4·9	13·0	1·0527	7·2
·5	1·0019	0·28	·7	1·0185	2·6	·9	1·0355	4·9	·1	1·0531	7·3
·6	1·0023	0·33	·8	1·0189	2·7	9·0	1·0359	5·0	·2	1·0536	7·3
·7	1·0027	0·39	·9	1·0193	2·7	·1	1·0364	5·05	·3	1·0540	7·4
·8	1·0031	0·44	5·0	1·0197	2·8	·2	1·0368	5·1	·4	1·0544	7·4
·9	1·0034	0·5	·1	1·0201	2·8	·3	1·0372	5·2	·5	1·0548	7·5
1·0	1·0038	0·55	·2	1·0205	2·9	·4	1·0376	5·2	·6	1·0553	7·5
·1	1·0042	0·6	·3	1·0209	2·9	·5	1·0380	5·3	·7	1·0557	7·6
·2	1·0046	0·7	·4	1·0213	3·0	·6	1·0384	5·3	·8	1·0561	7·65
·3	1·0050	0·7	·5	1·0217	3·0	·7	1·0388	5·4	·9	1·0566	7·7
·4	1·0054	0·8	·6	1·0221	3·1	·8	1·0393	5·4	14·0	1·0570	7·8
·5	1·0058	0·8	·7	1·0225	3·2	·9	1·0397	5·5	·1	1·0574	7·8
·6	1·0062	0·9	·8	1·0229	3·2	10·0	1·0401	5·55	·2	1·0578	7·9
·7	1·0066	0·9	·9	1·0233	3·3	·1	1·0405	5·6	·3	1·0583	7·9
·8	1·0070	1·0	6·0	1·0237	3·3	·2	1·0409	5·7	·4	1·0587	8·0
·9	1·0074	1·05	·1	1·0241	3·4	·3	1·0413	5·7	·5	1·0591	8·0
2·0	1·0077	1·1	·2	1·0245	3·4	·4	1·0418	5·8	·6	1·0596	8·1
·1	1·0081	1·2	·3	1·0249	3·5	·5	1·0422	5·8	·7	1·0600	8·15
·2	1·0085	1·2	·4	1·0253	3·6	·6	1·0426	5·9	·8	1·0604	8·2
·3	1·0089	1·3	·5	1·0257	3·6	·7	1·0430	5·9	·9	1·0609	8·3
·4	1·0093	1·3	·6	1·0261	3·7	·8	1·0434	6·0	15·0	1·0613	8·3
·5	1·0097	1·4	·7	1·0265	3·7	·9	1·0439	6·05	·1	1·0617	8·4
·6	1·0101	1·4	·8	1·0269	3·8	11·0	1·0443	6·1	·2	1·0621	8·4
·7	1·0105	1·5	·9	1·0273	3·8	·1	1·0447	6·2	·3	1·0626	8·5
·8	1·0109	1·55	7·0	1·0277	3·9	·2	1·0451	6·2	·4	1·0630	8·5
·9	1·0113	1·6	·1	1·0281	3·9	·3	1·0455	6·3	·5	1·0634	8·6
3·0	1·0117	1·7	·2	1·0286	4·0	·4	1·0459	6·3	·6	1·0639	8·65
·1	1·0121	1·7	·3	1·0290	4·1	·5	1·0464	6·4	·7	1·0643	8·7
·2	1·0125	1·8	·4	1·0294	4·1	·6	1·0468	6·4	·8	1·0647	8·8
·3	1·0129	1·8	·5	1·0298	4·2	·7	1·0472	6·5	·9	1·0652	8·8
·4	1·0133	1·9	·6	1·0302	4·2	·8	1·0476	6·55	16·0	1·0656	8·9
·5	1·0137	1·9	·7	1·0306	4·3	·9	1·0481	6·6	·1	1·0660	8·9
·6	1·0141	2·0	·8	1·0310	4·3	12·0	1·0485	6·7	·2	1·0665	9·0
·7	1·0145	2·0	·9	1·0314	4·4	·1	1·0489	6·7	·3	1·0669	9·0
·8	1·0149	2·1	8·0	1·0318	4·4	·2	1·0493	6·8	·4	1·0674	9·1
·9	1·0153	2·2	·1	1·0322	4·5	·3	1·0497	6·8	·5	1·0678	9·1
4·0	1·0157	2·2	·2	1·0327	4·55	·4	1·0502	6·9	·6	1·0682	9·2
·1	1·0161	2·3	·3	1·0331	4·6	·5	1·0506	6·9	·7	1·0687	9·25

TABLE SHOWING THE RELATION OF PERCENTAGES, ETC.—*continued.*

Per cent. of Sugar	Specific Gravity	Degree Baumé	Per cent. of Sugar	Specific Gravity	Degree Baumé	Per cent. of Sugar	Specific Gravity	Degree Baumé	Per cent. of Sugar	Specific Gravity	Degree Baumé
16·8	1·0691	9·3	21·8	1·0914	12·05	26·8	1·1144	14·8	31·8	1·1383	17·5
·9	1·0695	9·4	·9	1·0918	12·1	·9	1·1149	14·8	·9	1·1388	17·55
17·0	1·0700	9·4	22·0	1·0923	12·2	27·0	1·1154	14·9	32·0	1·1393	17·6
·1	1·0704	9·5	·1	1·0927	12·2	·1	1·1158	14·9	·1	1·1398	17·7
·2	1·0709	9·5	·2	1·0932	12·3	·2	1·1163	15·0	·2	1·1403	17·7
·3	1·0713	9·6	·3	1·0936	12·3	·3	1·1168	15·1	·3	1·1408	17·8
·4	1·0717	9·6	·4	1·0941	12·4	·4	1·1172	15·1	·4	1·1412	17·8
·5	1·0722	9·7	·5	1·0945	12·4	·5	1·1177	15·2	·5	1·1417	17·9
·6	1·0726	9·75	·6	1·0950	12·5	·6	1·1182	15·2	·6	1·1422	17·9
·7	1·0730	9·8	·7	1·0954	12·55	·7	1·1187	15·3	·7	1·1427	18·0
·8	1·0735	9·9	·8	1·0959	12·6	·8	1·1191	15·3	·8	1·1432	18·0
·9	1·0739	9·9	·9	1·0964	12·7	·9	1·1196	15·4	·9	1·1437	18·1
18·0	1·0744	10·0	23·0	1·0968	12·7	28·0	1·1201	15·4	33·0	1·1442	18·15
·1	1·0748	10·0	·1	1·0973	12·8	·1	1·1206	15·5	·1	1·1447	18·2
·2	1·0753	10·1	·2	1·0977	12·8	·2	1·1210	15·55	·2	1·1452	18·25
·3	1·0757	10·1	·3	1·0982	12·9	·3	1·1215	15·6	·3	1·1457	18·3
·4	1·0761	10·2	·4	1·0986	12·9	·4	1·1220	15·7	·4	1·1462	18·4
·5	1·0766	10·2	·5	1·0991	13·0	·5	1·1225	15·7	·5	1·1466	18·4
·6	1·0770	10·3	·6	1·0996	13·0	·6	1·1229	15·8	·6	1·1471	18·5
·7	1·0775	10·35	·7	1·1000	13·1	·7	1·1234	15·8	·7	1·1476	18·5
·8	1·0779	10·4	·8	1·1005	13·15	·8	1·1239	15·9	·8	1·1481	18·6
·9	1·0783	10·5	·9	1·1009	13·2	·9	1·1244	15·9	·9	1·1486	18·6
19·0	1·0788	10·5	24·0	1·1014	13·3	29·0	1·1248	16·0	34·0	1·1491	18·7
·1	1·0792	10·6	·1	1·1019	13·3	·1	1·1253	16·0	·1	1·1496	18·7
·2	1·0797	10·6	·2	1·1023	13·4	·2	1·1258	16·1	·2	1·1501	18·8
·3	1·0801	10·7	·3	1·1028	13·4	·3	1·1263	16·1	·3	1·1506	18·85
·4	1·0806	10·7	·4	1·1032	13·5	·4	1·1267	16·2	·4	1·1511	18·9
·5	1·0810	10·8	·5	1·1037	12·5	·5	1·1272	16·25	·5	1·1516	18·95
·6	1·0815	10·85	·6	1·1042	13·6	·6	1·1277	16·3	·6	1·1521	19·0
·7	1·0819	10·9	·7	1·1046	13·6	·7	1·1282	16·4	·7	1·1526	19·1
·8	1·0824	11·0	·8	1·1051	13·7	·8	1·1287	16·4	·8	1·1531	19·1
·9	1·0828	11·0	·9	1·1056	13·7	·9	1·1291	16·5	·9	1·1536	19·2
20·0	1·0832	11·1	25·0	1·1060	13·75	30·0	1·1296	16·5	35·0	1·1541	19·2
·1	1·0837	11·1	·1	1·1065	13·8	·1	1·1301	16·6	·1	1·1546	19·3
·2	1·0841	11·2	·2	1·1070	13·9	·2	1·1306	16·6	·2	1·1551	19·3
·3	1·0846	11·2	·3	1·1074	14·0	·3	1·1311	16·7	·3	1·1556	19·4
·4	1·0850	11·3	·4	1·1079	14·0	·4	1·1315	16·7	·4	1·1561	19·4
·5	1·0855	11·3	·5	1·1083	14·1	·5	1·1320	16·8	·5	1·1566	19·5
·6	1·0859	11·4	·6	1·1088	14·1	·6	1·1325	16·85	·6	1·1571	19·55
·7	1·0864	11·45	·7	1·1093	14·2	·7	1·1330	16·9	·7	1·1576	19·6
·8	1·0868	11·5	·8	1·1097	14·2	·8	1·1335	17·0	·8	1·1581	19·65
·9	1·0873	11·6	·9	1·1102	14·3	·9	1·1340	17·0	·9	1·1586	19·7
21·0	1·0877	11·6	26·0	1·1107	14·35	31·0	1·1344	17·1	36·0	1·1591	19·8
·1	1·0882	11·7	·1	1·1111	14·4	·1	1·1349	17·1	·1	1·1596	19·8
·2	1·0886	11·7	·2	1·1116	14·5	·2	1·1354	17·2	·2	1·1601	19·9
·3	1·0891	11·8	·3	1·1121	14·5	·3	1·1359	17·2	·3	1·1606	19·9
·4	1·0895	11·8	·2	1·1125	14·6	·4	1·1364	17·3	·4	1·1611	20·0
·5	1·0900	11·9	·5	1·1130	14·6	·5	1·1369	17·3	·5	1·1616	20·0
·6	1·0904	11·95	·6	1·1135	14·7	·6	1·1374	17·4	·6	1·1621	20·1
·7	1·0909	12·0	·7	1·1140	14·7	·7	1·1378	17·4	·7	1·1626	20·1

TABLE SHOWING THE RELATION OF PERCENTAGES, ETC.—*continued.*

Per cent. of Sugar	Specific Gravity	Degree Baumé	Per cent. of Sugar	Specific Gravity	Degree Baumé	Per cent. of Sugar	Specific Gravity	Degree Baumé	Per cent. of Sugar	Specific Gravity	Degree Baumé
36·8	1·1631	20·2	41·8	1·1887	22·9	46·8	1·2153	25·5	51·8	1·2427	28·1
·9	1·1636	20·2	·9	1·1892	22·9	·9	1·2158	25·6	·9	1·2433	28·2
37·0	1·1641	20·3	42·0	1·1898	23·0	47·0	1·2163	25·6	52·0	1·2439	28·2
·1	1·1646	20·35	·1	1·1903	23·0	·1	1·2169	25·7	·1	1·2444	28·3
·2	1·1651	20·4	·2	1·1908	23·1	·2	1·2174	25·7	·2	1·2450	28·3
·3	1·1656	20·5	·3	1·1913	23·1	·3	1·2180	25·8	·3	1·2455	28·4
·4	1·1661	20·5	·4	1·1919	23·2	·4	1·2185	25·8	·4	1·2461	28·4
·5	1·1666	20·6	·5	1·1924	23·2	·5	1·2191	25·9	·5	1·2467	28·5
·6	1·1671	20·6	·6	1·1929	23·3	·6	1·2196	25·9	·6	1·2472	28·5
·7	1·1676	20·7	·7	1·1934	23·3	·7	1·2201	26·0	·7	1·2478	28·6
·8	1·1681	20·7	·8	1·1940	23·4	·8	1·2207	26·0	·8	1·2483	28·65
·9	1·1686	20·8	·9	1·1945	23·45	·9	1·2212	26·1	·9	1·2489	28·7
38·0	1·1692	20·8	43·0	1·1950	23·5	48·0	1·2218	26·1	53·0	1·2495	28·75
·1	1·1697	20·9	·1	1·1955	23·55	·1	1·2223	26·2	·1	1·2500	28·8
·2	1·1702	20·9	·2	1·1961	23·6	·2	1·2229	26·2	·2	1·2506	28·85
·3	1·1707	21·0	·3	1·1966	23·7	·3	1·2234	26·3	·3	1·2512	28·9
·4	1·1712	21·05	·4	1·1971	23·7	·4	1·2240	26·35	·4	1·2517	28·9
·5	1·1717	21·1	·5	1·1976	23·8	·5	1·2245	26·4	·5	1·2523	29·0
·6	1·1722	21·15	·6	1·1982	23·8	·6	1·2250	26·45	·6	1·2529	29·1
·7	1·1727	21·2	·7	1·1987	23·9	·7	1·2256	26·5	·7	1·2534	29·1
·8	1·1732	21·3	·8	1·1992	23·9	·8	1·2261	26·6	·8	1·2540	29·2
·9	1·1737	21·3	·9	1·1998	24·0	·9	1·2267	26·6	·9	1·2546	29·2
39·0	1·1743	21·4	44·0	1·2003	24·0	49·0	1·2272	26·7	54·0	1·2551	29·3
·1	1·1748	21·4	·1	1·2008	24·1	·1	1·2278	26·7	·1	1·2557	29·3
·2	1·1753	21·5	·2	1·2013	24·1	·2	1·2283	26·8	·2	1·2563	29·4
·3	1·1758	21·5	·3	1·2019	24·2	·3	1·2289	26·8	·3	1·2568	29·4
·4	1·1763	21·6	·4	1·2024	24·2	·4	1·2294	26·9	·4	1·2574	29·5
·5	1·1768	21·6	·5	1·2029	24·3	·5	1·2300	26·9	·5	1·2580	29·5
·6	1·1773	21·7	·6	1·2035	24·35	·6	1·2305	27·0	·6	1·2585	29·6
·7	1·1778	21·7	·7	1·2040	24·4	·7	1·2311	27·0	·7	1·2591	29·6
·8	1·1784	21·8	·8	1·2045	24·45	·8	1·2316	27·1	·8	1·2597	29·7
·9	1·1789	21·85	·9	1·2051	24·5	·9	1·2322	27·1	·9	1·2602	29·7
40·0	1·1794	21·9	45·0	1·2056	24·6	50·0	1·2327	27·2	55·0	1·2608	29·8
·1	1·1799	22·0	·1	1·2061	24·6	·1	1·2333	27·2	·1	1·2614	29·8
·2	1·1804	22·0	·2	1·2067	24·7	·2	1·2338	27·3	·2	1·2620	29·9
·3	1·1809	22·1	·3	1·2072	24·7	·3	1·2344	27·3	·3	1·2625	29·9
·4	1·1815	22·1	·4	1·2077	24·8	·4	1·2349	27·4	·4	1·2631	30·0
·5	1·1820	22·2	·5	1·2083	24·8	·5	1·2355	27·45	·5	1·2637	30·05
·6	1·1825	22·2	·6	1·2088	24·9	·6	1·2361	27·5	·6	1·2642	30·1
·7	1·1830	22·3	·7	1·2093	24·9	·7	1·2366	27·55	·7	1·2648	30·15
·8	1·1835	22·3	·8	1·2099	25·0	·8	1·2372	27·6	·8	1·2654	30·2
·9	1·1840	22·4	·9	1·2104	25·0	·9	1·2377	27·7	·9	1·2660	30·25
41·0	1·1846	22·4	46·0	1·2110	25·1	51·0	1·2383	27·7	56·0	1·2665	30·3
·1	1·1851	22·5	·1	1·2115	25·1	·1	1·2388	27·8	·1	1·2671	30·4
·2	1·1856	22·5	·2	1·2120	25·2	·2	1·2394	27·8	·2	1·2677	30·4
·3	1·1861	22·6	·3	1·2126	25·2	·3	1·2399	27·9	·3	1·2683	30·5
·4	1·1866	22·65	·4	1·2131	25·3	·4	1·2405	27·9	·4	1·2688	30·5
·5	1·1872	22·7	·5	1·2136	25·35	·5	1·2411	28·0	·5	1·2694	30·6
·6	1·1877	22·75	·6	1·2142	25·4	·6	1·2416	28·0	·6	1·2700	30·6
·7	1·1882	22·8	·7	1·2147	25·45	·7	1·2422	28·1	·7	1·2706	30·7

TABLE SHOWING THE RELATION OF PERCENTAGES, ETC.—*continued.*

Per cent. of Sugar	Specific Gravity	Degree Baumé	Per cent. of Sugar	Specific Gravity	Degree Baumé	Per cent. of Sugar	Specific Gravity	Degree Baumé	Per cent. of Sugar	Specific Gravity	Degree Baumé
56·8	1·2712	30·7	61·8	1·3005	33·3	66·8	1·3309	35·8	71·8	1·3623	38·2
·9	1·2717	30·8	·9	1·3011	33·3	·9	1·3315	35·8	·9	1·3629	38·3
57·0	1·2723	30·8	62·0	1·3017	33·4	67·0	1·3322	35·9	72·0	1·3635	38·3
·1	1·2729	30·9	·1	1·3023	33·4	·1	1·3327	35·9	·1	1·3642	38·4
·2	1·2735	30·9	·2	1·3029	33·5	·2	1·3334	36·0	·2	1·3648	38·4
·3	1·2740	31·0	·3	1·3035	33·5	·3	1·3340	36·0	·3	1·3655	38·5
·4	1·2746	31·0	·4	1·3041	33·6	·4	1·3346	36·1	·4	1·3661	38·5
·5	1·2752	31·1	·5	1·3047	33·6	·5	1·3352	36·1	·5	1·3667	38·6
·6	1·2758	31·1	·6	1·3053	33·7	·6	1·3359	36·2	·6	1·3674	38·6
·7	1·2764	31·2	·7	1·3059	33·7	·7	1·3365	36·2	·7	1·3680	38·7
·8	1·2769	31·2	·8	1·3065	33·8	·8	1·3371	36·3	·8	1·3687	38·7
·9	1·2775	31·3	·9	1·3071	33·8	·9	1·3377	36·3	·9	1·3693	38·8
58·0	1·2781	31·3	63·0	1·3077	33·9	68·0	1·3384	36·4	73·0	1·3699	38·8
·1	1·2787	31·4	·1	1·3083	33·9	·1	1·3390	36·4	·1	1·3705	38·9
·2	1·2793	31·4	·2	1·3085	34·0	·2	1·3396	36·5	·2	1·3712	38·9
·3	1·2799	31·5	·3	1·3095	34·0	·3	1·3402	36·5	·3	1·3719	39·0
·4	1·2804	31·5	·4	1·3101	34·1	·4	1·3408	36·6	·4	1·3725	39·0
·5	1·2810	31·6	·5	1·3107	34·1	·5	1·3415	36·6	·5	1·3732	39·1
·6	1·2816	31·6	·6	1·3113	34·2	·6	1·3421	36·7	·6	1·3738	39·1
·7	1·2822	31·7	·7	1·3119	34·2	·7	1·3427	36·7	·7	1·3745	39·2
·8	1·2828	31·7	·8	1·3126	34·3	·8	1·3433	36·8	·8	1·3751	39·2
·9	1·2834	31·8	·9	1·3132	34·3	·9	1·3440	36·8	·9	1·3757	39·3
59·0	1·2840	31·85	64·0	1·3138	34·4	69·0	1·3446	36·9	74·0	1·3764	39·3
·1	1·2845	31·9	·1	1·3144	34·4	·1	1·3452	36·9	·1	1·3770	39·4
·2	1·2851	31·95	·2	1·3150	34·5	·2	1·3458	37·0	·2	1·3777	39·4
·3	1·2857	32·0	·3	1·3156	34·5	·3	1·3465	37·0	·3	1·3783	39·5
·4	1·2863	32·05	·4	1·3162	34·6	·4	1·3471	37·1	·4	1·3790	39·5
·5	1·2869	32·1	·5	1·3168	34·6	·5	1·3477	37·1	·5	1·3796	39·6
·6	1·2875	32·15	·6	1·3174	34·7	·6	1·3484	37·2	·6	1·3803	39·6
·7	1·2881	32·2	·7	1·3180	34·7	·7	1·3490	37·2	·7	1·3809	39·7
·8	1·2887	32·3	·8	1·3186	34·8	·8	1·3496	37·3	·8	1·3816	39·7
·9	1·2893	32·3	·9	1·3192	34·8	·9	1·3502	37·3	·9	1·3822	39·8
60·0	1·2898	32·4	65·0	1·3198	34·9	70·0	1·3509	37·4	75·0	1·3828	39·8
·1	1·2904	32·4	·1	1·3205	34·95	·1	1·3515	37·4	·1	1·3835	39·9
·2	1·2910	32·5	·2	1·3211	35·0	·2	1·3521	37·5	·2	1·3842	39·9
·3	1·2916	32·5	·3	1·3217	35·05	·3	1·3528	37·5	·3	1·3848	40·0
·4	1·2922	32·6	·4	1·3223	35·1	·4	1·3534	37·6	·4	1·3855	40·0
·5	1·2928	32·6	·5	1·3229	35·15	·5	1·3540	37·6	·5	1·3861	40·1
·6	1·2934	32·7	·6	1·3235	35·2	·6	1·3546	37·7	·6	1·3868	40·1
·7	1·2940	32·7	·7	1·3241	35·25	·7	1·3553	37·7	·7	1·3874	40·2
·8	1·2946	32·8	·8	1·3247	35·3	·8	1·3559	37·8	·8	1·3880	40·2
·9	1·2952	32·8	·9	1·3253	35·35	·9	1·3565	37·8	·9	1·3887	40·3
61·0	1·2958	32·9	66·0	1·3260	35·4	71·0	1·3572	37·9	76·0	1·3894	40·3
·1	1·2964	32·9	·1	1·3266	35·4	·1	1·3578	37·9	·1	1·3900	40·4
·2	1·2970	33·0	·2	1·3272	35·5	·2	1·3585	38·0	·2	1·3907	40·4
·3	1·2975	33·0	·3	1·3278	35·5	·3	1·3591	38·0	·3	1·3913	40·5
·4	1·2981	33·1	·4	1·3285	35·6	·4	1·3597	38·1	·4	1·3920	40·5
·5	1·2987	33·1	·5	1·3291	35·6	·5	1·3604	38·1	·5	1·3926	40·6
·6	1·2993	33·2	·6	1·3297	35·7	·6	1·3610	38·2	·6	1·3933	40·6
·7	1·2999	33·2	·7	1·3303	35·7	·7	1·3616	38·2	·7	1·3940	40·7

TABLE SHOWING THE RELATION OF PERCENTAGES, ETC.—*continued.*

Per cent. of Sugar	Specific Gravity	Degree Baumé	Per cent. of Sugar	Specific Gravity	Degree Baumé	Per cent. of Sugar	Specific Gravity	Degree Baumé	Per cent. of Sugar	Specific Gravity	Degree Baumé
76·8	1·3946	40·7	79·2	1·4105	41·9	81·5	1·4259	43·0	83·8	1·4416	44·1
·9	1·3953	40·8	·3	1·4112	41·9	·6	1·4266	43·0	·9	1·4423	44·1
77·0	1·3959	40·8	·4	1·4119	42·0	·7	1·4273	43·1	84·0	1·4430	44·2
·1	1·3966	40·8	·5	1·4125	42·0	·8	1·4280	43·1	·1	1·4437	44·2
·2	1·3972	40·9	·6	1·4132	42·1	·9	1·4287	43·2	·2	1·4443	44·3
·3	1·3979	41·0	·7	1·4138	42·1	82·0	1·4293	43·2	·3	1·4450	44·3
·4	1·3986	41·0	·8	1·4145	42·2	·1	1·4300	43·3	·4	1·4457	44·3
·5	1·3992	41·0	·9	1·4152	42·2	·2	1·4307	43·3	·5	1·4464	44·4
·6	1·3999	41·1	80·0	1·4158	42·2	·3	1·4314	43·4	·6	1·4471	44·4
·7	1·4005	41·1	·1	1·4165	42·3	·4	1·4320	43·4	·7	1·4478	44·5
·8	1·4012	41·2	·2	1·4172	42·3	·5	1·4327	43·5	·8	1·4485	44·5
·9	1·4019	41·2	·3	1·4179	42·4	·6	1·4334	43·5	·9	1·4492	44·6
78·0	1·4025	41·3	·4	1·4185	42·4	·7	1·4341	43·5	85·0	1·4498	44·6
·1	1·4032	41·3	·5	1·4192	42·5	·8	1·4348	43·6	·1	1·4505	44·7
·2	1·4039	41·4	·6	1·4199	42·5	·9	1·4354	43·6	·2	1·4512	44·7
·3	1·4045	41·4	·7	1·4205	42·6	83·0	1·4361	43·7	·3	1·4519	44·8
·4	1·4052	41·5	·8	1·4212	42·6	·1	1·4368	43·7	·4	1·4526	44·8
·5	1·4058	41·5	·9	1·4219	42·7	·2	1·4375	43·8	·5	1·4533	44·9
·6	1·4065	41·6	81·0	1·4226	42·7	·3	1·4382	43·8	·6	1·4540	44·9
·7	1·4072	41·6	·1	1·4232	42·8	·4	1·4388	43·9	·7	1·4547	45·0
·8	1·4078	41·7	·2	1·4239	42·8	·5	1·4395	43·9	·8	1·4554	45·0
·9	1·4085	41·7	·3	1·4246	42·9	·6	1·4402	44·0	·9	1·4561	45·1
79·0	1·4092	41·8	·4	1·4253	42·9	·7	1·4409	44·0	86·0	1·4568	45·1
·1	1·4098	41·8									

Beetroots.—Various methods of extraction, digestion and diffusion with hot or cold water, or with alcohol, have from time to time been employed for the determination of sugar in the beetroot, but the method of instantaneous cold diffusion proposed by Pellet has the merit of accuracy and speed. The beets are cleaned from any adhering earthy matter; the green portion at the top being carefully trimmed off. From the whole beet, the pulp is prepared by means of a special cutting disc known as the Keil cutter (similar to a wood rasp file). With fresh beet slices, a fair sample is first passed through a mincing machine so as to convert it into a coarse pulp, then a portion of the pulp is put through a Sans Pareille press, so as to convert it into a fine pulp suitable for analysis. Pieces of beet removed from certain parts of the roots may be treated

in like manner. A portion of pulp corresponding to the normal weight of the polariscope used is weighed out and rinsed with cold water into a 200 c.c. flask. A quantity of basic lead acetate (8 c.c.) at 25° or 30° B., equal to 30 per cent. of the pulp, is added, then water nearly to the 200 c.c. mark, and any foam removed by a few drops of ether, or a mixture of ether and alcohol. The volume is then completed to 200 c.c., the whole shaken vigorously and the solution filtered. To the filtered liquid a drop of glacial acetic acid is added. It is polarised in a 400 mm. tube, the reading giving the saccharine richness of the pulp analysed. The reading in a 200 mm. tube must be doubled. Owing to the volume occupied by the marc, certain corrections are necessary. The mean percentage of marc in the beet is 4·8, and its density 1·6; the volume occupied by the marc from 100 grams of pulp is therefore 3 c.c. To allow for this, either the normal weight must be made up to 200·8 c.c., or the weight of pulp taken for 200 c.c. must be reduced by 0·11 gram.

If more than 26 grams of the pulp are taken per 200 c.c., there may be some difficulty in getting rid of the foam. Also in using the Keil rasping disc, a similar difficulty may arise if it revolves at too high a speed, and the pulp is formed into a cream and emulsified.

A modification of the process introduced by Loewenberg, with the idea of avoiding the inconvenience due to foam, consists in omitting the final adjustment of the volume by adding to a known weight of the pulp certain pre-arranged volumes of water and reagents, the whole then being mixed, filtered and polarised. It is based on a mean density of the juice of 1·075 to 1·080. Weight of pulp 26·048 grams, water added 177 c.c., corresponding to a total volume of 200 c.c. The results are slightly out when the juice density of the beets analysed is appreciably different from that taken for the base. Exhausted pulp may be examined in a similar manner.

Sugar-Cane Analysis.—A correct estimation of the amount

of sugar obtainable from sugar-canes is more difficult than in the case of beetroots; the best plan to be pursued is as follows: Obtain a true sample of the canes of about 4 to 6 lb. in weight, drawn in such a way as to obtain a fair proportion of the joints in the canes, so as to faithfully represent the entire canes. Slice the pieces longitudinally with a sharp knife, making at least 3 or 4 cuts, so as to divide them into slips not more than $\frac{1}{2}$ to $\frac{5}{8}$ inch in thickness. Pass these slips between the rollers of a hand-roller press provided with a tray underneath and a spout to carry away the liquid which is pressed out. After passing the slips through twice, increasing the pressure on the second occasion, dip them into hot water for a few seconds, so as to moisten them, and pass again through the press 2 or 3 times, still increasing the pressure each time. When this has been done, the liquid pressed out is in a state fit for analysis, and this may be carried through at once on the liquid, calculations being made on the original material, i.e. the sugar-cane put in the press.

Determination of Sugar. Optical Methods. Polarised Light.—For an account of the nature of polarised light and of the polariscope, we refer to the admirably clear and highly interesting paper on the 'Polariscope and its Applications,' by J. Heron, read before the Society of Chemical Industry in 1888.

Instruments of various forms have been devised for observing and measuring the rotative power of substances under polarised light, and have hence been termed Polariscopes or Polarimeters.

The simplest of all forms of polariscope consists of two Nicol's prisms, enclosed in brass tubes and fixed one at each end of a metallic bar, along which they may be made to slide to and fro. The polariser is contained in a brass tube, and is made to turn on its axis if required, being fixed in any desired position by means of a small screw. The tube containing the analyser is also capable of rotating on its axis,

and has an arm attached to it, as well as a pointer, which measures off the amount of rotation upon a fixed graduated circle of brass. The graduation of this circle is in degrees and tenths, from 0° to 360°. The observation tube which may be made of brass or of stout glass, with brass fittings, is designed to hold the saccharine solution under examination, and is closed at each end by a screw cap having a small circular hole in its centre. Glass discs are placed between the caps and the ground ends of the tube, and washers of cork or india-rubber between the glass plates and caps, so that when the tube is filled with liquid and the whole screwed up, a tight-fitting joint is made at each end. In using an instrument of this kind it will be found best to employ a monochromatic yellow light, such as that furnished by a sodium flame; but this form of instrument is now comparatively little used, if at all, being replaced by much more accurate forms of polarising apparatus.

Half-Shade Instruments.

The distinguishing characteristic of this class of polarimeters is that, for a certain position of the optical parts, the field of vision appears divided into halves, the one being very bright and the other very dark, whilst, for another position, the whole field exhibits a uniform greyish shadow, without any trace of vertical line. Monochromatic sodium light is used with such instruments.

The earliest instrument of this kind was constructed by Jellett in 1860. Other forms have been devised by Cornu and Duboscq, but the one in most general use is that of Laurent.

Fig. 212 shows the principle of construction of this instrument. *a* is a plate of bichromate of potassium, or a glass cell filled with a concentrated solution of the same, and which serves to cut off any green, blue, or violet rays, thus rendering the light more fully monochromatic. *b*, the polariser, is a calc spar prism; the face of the prism towards *a* is ground convex

so that light may emerge approximately parallel. These two parts are placed in the movable brass tube *a b*, which may be kept in any desired position by means of a screw-stop B. *c* is a circular diaphragm covered by a plate of glass, to which

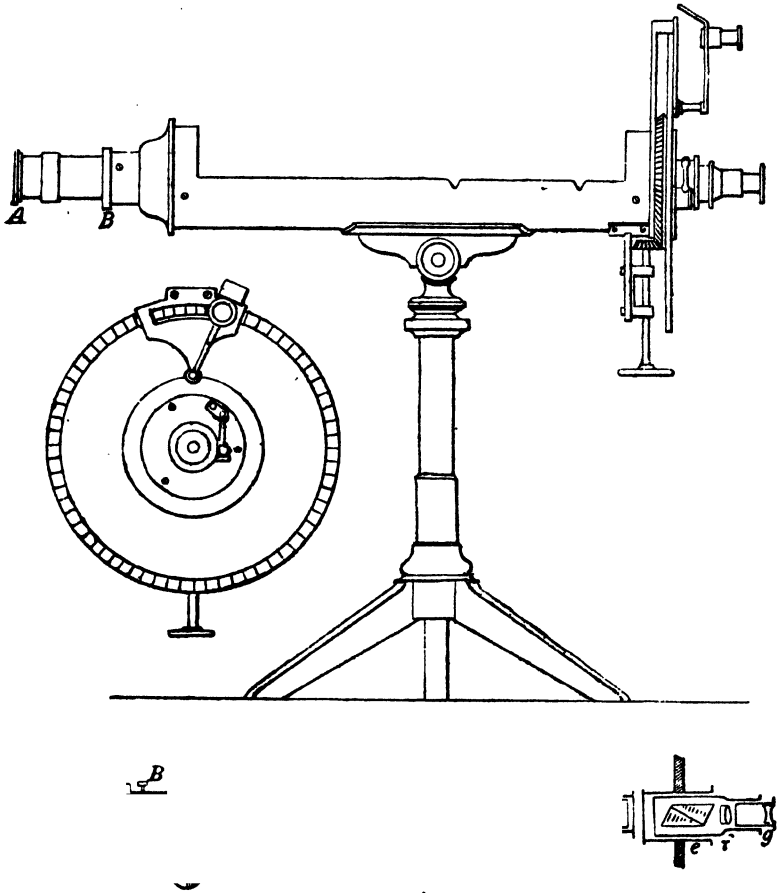

FIG. 212.—LAURENT'S POLARISCOPE.

is cemented a thin plate of quartz, cut parallel to its axis, in such a manner that only one-half of the circular aperature is covered by it. *d* is the solution tube, *e* the analysing Nicol, and *f* and *g* the lenses of a small telescope.

The theory of this polarimeter is as follows: If the plane of polarisation of the transmitted ray of light is parallel to the axis of the quartz plate, that is, lies in the direction A B, Fig. 213, the two halves of the field of vision will then appear equally dark or equally bright in every position of the analyser. But if the *polariser* be inclined to A B at an angle a, the plane of polarisation of the rays passing through the quartz plate will undergo deviation through an angle a' in the opposite direction. Therefore, when, in the uncovered half, the plane of polarisation has the direction A C, in the covered half it will have the direction A C'. If now we turn the *analyser*, until its *principal section is perpendicular to that of the polariser* there will be *a total extinction of the light to the right*, but only

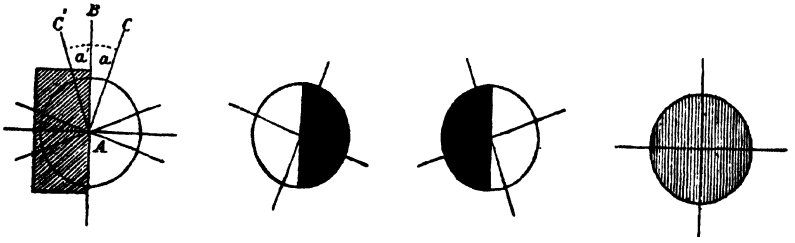

FIGS. 213, 214, 215, 216.—LAURENT'S POLARISCOPE.

partial to the left (Fig. 214). On the contrary, if the principal section of the *analyser is perpendicular to that which corresponds to the quartz plate*, then there will be *total extinction to the left* and partial to the right (Fig. 215). If, finally, the principal section of the analyser is intermediate in position, that is neither perpendicular to the axis of the crystal nor parallel to it, there will be partial extinction both to the right and left, and of equal intensity, so that the two halves of the luminous disc constituting the field of the instrument will appear uniformly in shadow (Fig. 216), but a very slight movement of the analyser one way or the other will at once destroy this uniformity. The same phenomena are apparent when the analyser has moved through 180°.

TRANSITION TINT INSTRUMENTS.

The transition tint instruments are specially constructed for determining the percentages of sugar in solutions of known density.

The earliest form of these instruments is known as the Soleil Saccharimeter; this has been much improved by Duboscq, and in its present form is called the Soleil-Duboscq Saccharimeter.

The optical principles of the transition tint instruments are based upon the following facts :—

1. That when a polarised ray is transmitted through several media possessing rotatory power in different directions, their

FIG. 217.—SOLEIL-DUBOSCQ SACCHARIMETER.

separate activities may become partially or wholly neutralised according to the length of the media.

2. That the rotatory dispersion of cane sugar is the same as that of quartz.

This latter fact is generally taken for granted by the Continental chemists, but English observers find that there is a slight difference between the dispersion of quartz and that of cane sugar, and quite sufficient to make an appreciable difference in the results of analysis.

In Fig. 217 is shown the apparatus: *a* is the polariser, consisting of a calc spar prism ; *b* is a plate of quartz called the plate of double rotation or bi-quartz, and is composed of two halves of equal thickness cut perpendicularly to the axis of crystallisation, and joined together so that the line of junction is vertical. These half discs have different

rotations, the one being left-handed and the other right-handed. *c* is the solution tube; *d* is a quartz plate either right- or left-handed, and of a certain thickness; *e e'* are two wedge-shaped quartz plates, both having the same kind of rotation, but different to that of *d*. These plates are each fixed in a brass frame, and by means of a rack and pinion, are made to slide over one another, so that their combined thickness may be made either equal to, greater, or less than that of *d*. The distance moved to effect any particular adjustment is shown by a graduated scale attached to the brass frame. *f* is the analyser, which may consist of an achromatised calc spar prism; its principal section must be arranged parallel to that of the polariser *a*, when the thickness of the bi-quartz *b* is 3·75 millimetres, and perpendicular thereto when the thickness is 7·5 millimetres.

Soleil introduced an extra Nicol prism, shown at *i*, and a plate of quartz, *g*, ground perpendicular to the axis, fixed in a movable case, and which may be turned at will through an angle of 180°. This arrangement is called the regulator, and is used for the purpose of counteracting, to a certain extent, the influence of the coloration in the liquids subjected to examination, and to restore the sensitive tint, which would otherwise be destroyed when using such coloured liquids. *h h'* is a small Galilean telescope.

In order to understand the action of the several parts, let us first consider that light is passing through the polariser and analyser only. These are arranged with their principal sections parallel so that the field is at its maximum of illumination. Now let the active bi-quartz *b* be interposed between *a* and *f*; the white light coming from *a* will be rotated and decomposed into its component coloured rays. Of these emergent rays those whose plane of polarisation is at right angles to that of the analyser will not be transmitted, and should these be the yellow rays, the remainder will in transmission combine to a pale lilac tint, which, with the slightest

alteration of the place of polarisation, passes into pure red or pure blue. This intermediate colour is the transition tint.

If now we put the combination *d e e'*, known as the rotation compensator, in its place, the quartz wedges *e e'* being so adjusted that their combined thickness is exactly equal to that of the plate *d*, as the rotatory powers of *d* and *e e'* act in exactly opposite directions they neutralise each other and the sensitive tint still prevails. This position of the wedges corresponds with the zero point of the scale. If now a tube containing a solution, say, of cane sugar, be interposed, the uniformity of colour between the two half discs is immediately destroyed, appearing differently coloured, green and blue predominating in one, red and orange in the other; by sliding the quartz wedges so as to produce rotation opposite to that of the solution, a position may be found where the action of the latter is neutralised, and this will be indicated when the halves of the field of vision again exhibit uniformly the sensitive tint.

This action of the compensator shows not only whether the solution of the substance examined, is right or left rotating, but also the degree as measured by the thickness of quartz necessary to neutralise the deviation of the body examined. The latter is measured by means of a graduated scale fixed to one of the slides, while upon the other is a mark serving as an indicator.

The Soleil-Ventzke-Scheibler saccharimeter, in the principles of its construction, is identically the same as the Soleil-Duboscq, but the mechanical parts have been greatly improved and the optical arrangement slightly altered.

These alterations were made in Germany by Ventzke, who introduced a different scale, the mechanical improvements being made by Scheibler. The various parts as shown in section, Fig. 218, are lettered respectively the same as the Soleil-Duboscq, so that the description there given will apply equally to the Ventzke.

For further particulars on the subject the reader is referred to Mr. J. Heron's paper, 'Journ. Soc. Chem. Indus.,' April 30, 1888.

In addition to the polariscopes above described, attention must be called to a half-shadow instrument constructed by Schmidt and Haensch of Berlin. This polariscope is similar in many respects to the Soleil-Ventzke-Scheibler, but differs from it mainly by the introduction of a shadow Nicol prism of peculiar construction. It is worked with ordinary white light, and thus does away with the trouble of the sodium flame, and it is capable of being employed with solutions of a somewhat dark colour. It is quite as delicate as any other form of polariscope, and can be successfully used by persons

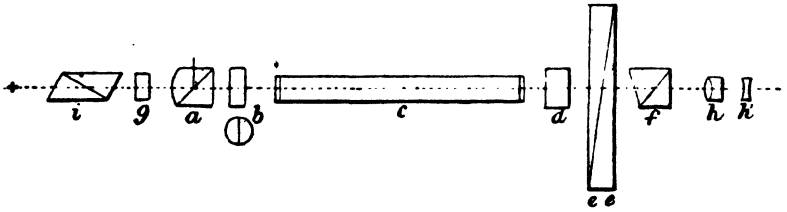

FIG. 218.—SOLEIL-VENTZKE-SCHEIBLER SACCHARIMETER.

who, owing to colour-blindness, are incapable of making correct observations in the transition-tint instruments.

Messrs. Schmidt and Haensch have recently introduced a half-shadow instrument with triple field which is extremely sensitive, the segments to the left and right of the field of view being dark and the centre strip light, or *vice-versâ*, with the slightest possible movement from adjustment. This result is obtained by two small Nicol prisms placed in front of the polariser.

For the purpose of checking the accuracy of the polariscope, reference must always be made to pure sugar, the normal weight of which when made up to standard volume and read off at the temperature for which the instrument is graduated, usually 20° C., should read 100. Should this not

be the case a different weight must be used for all determinations with the particular instrument in question. Quartz tubes with definite readings may now be procured, and are very useful for ready verification.

Specific Rotatory Power.—The mode in which the specific rotatory power of liquids is measured is somewhat peculiar. It follows from what has been said that the rotation is directly proportionate to the length of the column of liquid through which the ray passes, and is also proportional, sometimes directly and sometimes indirectly, to the quantity of active substance dissolved in the liquid. If e be the amount of substance dissolved in a unit of weight of the solution, l the length of the liquid column, and a the observed angle of rotation for any particular column, at the transition tint, the angle of rotation for the unit of length will be $\frac{a}{e\,l}$; but as the solution of the optically active body is often attended with alteration of volume, it is desirable, in order to obtain an expression independent of such irregularities, to refer the observed angle of deviation to a hypothetical unit of density—that is, to divide the quantity $\frac{a}{e\,l}$ by the density g of the solution. The expression $[a]j = \frac{a}{elg}$ is called the specific rotatory power, and represents the angle of deviation which the pure substance in a column of the unit of length and density 1 would impart to the ray corresponding to the transition tint. For instance, a solution containing 0·155 grm. of cane sugar to 1 grm. of liquid has a sp. gr. of 1·06, and deflects the polarised ray for the transition tint 24° in a tube 20 mm. long. The specific rotatory power is therefore—

$$[a]j = \frac{24}{\cdot 155 \times 20 \times 1\cdot 06} = 7\cdot 30^{\circ}.$$

$[a]$ is the expression for the specific rotatory power in general; a letter affixed shows the particular ray of the

spectrum at which the deviation was observed, thus [*a*] D and [*a*]*j* are the expressions for the line D of the spectrum, and for the mean yellow ray or transition tint respectively. The minus sign is prefixed to the degree, when the substance rotates to the left.

The subjoined statement shows the equivalence in degrees of different polariscopes :—

		Grm. Sugar in 100 c.c.
1° Scale of Mitscherlich..	=	·750
1° ,, Soleil-Duboscq	=	·1619
1° ,, Ventzke-Soleil	=	·26048
1° ,, Wild (sugar scale)	=	·1000
1° ,, Shadow sacchar. (of Laurent and Duboscq)	=	·1619

1° Mitscherlich	=	4·635°	Soleil-Duboscq.
1° ,,	=	2·879°	Soleil-Ventzke.
1° Soleil-Duboscq	=	·215°	Mitscherlich.
1° ,, ,,	=	·620°	Ventzke-Soleil.
1° ,, ,,	=	1·619°	Wild.
1° ,, Ventzke	=	·346°	Mitscherlich.
1° ,, ,,	=	1·608°	Soleil-Duboscq.
1° ,, ,,	=	2·648°	Wild.
1° Wild (sugar scale)	=	·618°	Soleil-Duboscq.
1° ,, ,,	=	·384°	Soleil-Ventzke.
1° ,, ,,	=	·133°	Mitscherlich.

Equivalence in circular degrees :—

Wild (sugar scale)	1°	= ·1328	circ. degree	D.
Soleil-Duboscq	*j* 1°	= ·2167	,, ,,	D.
,, ,,	*j* 1°	= ·2450	,, ,,	*j*.
Soleil-Ventzke	*j* 1°	= ·3455	,, ,,	D.
,, ,,	*j* 1°	= ·3906	,, ,,	*j*.

Instruments reading angular degrees, such as Wild's, Laurent's, and Duboscq's *saccharimètre à pénombre* may be made to give the concentration—i.e. the number of grm. of sugar in 100 c.c. of solution—by the following formula :—

$$C = \frac{100\,a}{k\,[a]\,D},$$

in which *a* is the observed angle of rotation, *k* the length of the observation-tube in decimetres, and [*a*] D the specific rotatory power of cane sugar for monochromatic light, which, for most purposes, may be placed at 66·4°. When the sp. gr.

of the solution operated upon is known, the percentage by weight can be calculated by dividing the value of C obtained as above by the density.

Analysis of Commercial Glucose or Starch Sugar.—The production of this sugar has already been described (see pp. 521–566). It occurs either as a solid mass, as a granular powder, or as a syrup. As in the case of cane sugar, the full and complete analysis is attended with considerable difficulty, and it is therefore customary to return only 4 or 5 leading figures, which in most cases are sufficient for commercial purposes. The different processes will first be dealt with separately, and then the way in which they are carried out, and the mode in which the results are returned.

The specific gravity of dextrose solution differs somewhat from that of cane sugar containing the same amount of solid matter; Pohl gives the following table:—

Per cent. Sugar.	Density of Solution.		Difference in Density.
	Cane Sugar.	Grape Sugar.	
2	1·0080	1·0072	− 8
5	1·0201	1·0200	− 1
7	1·0281	1·0275	− 6
10	1·0405	1·0406	+ 1
12	1·0487	1·0480	− 7
15	1·0616	1·0616	0
17	1·0704	1·0693	− 11
20	1·0838	1·0831	− 7
22	1·0929	1·0909	− 20
25	1·1068	1·1021	− 47

Determination of Dextrose by means of Fermentation.—A standard solution of the sample to be examined is made, and the percentage of dry matter estimated. A weighed quantity of yeast is then added to the solution, and it is submitted to fermentation; after the alcohol and carbonic acid formed have been expelled, the percentage of dry matter is again determined by the difference in weight of the entire apparatus before and after fermentation. The difference

between the amounts of dry matter before and after the fermentation shows the amount of sugars in the fermentable form. The process incurs a certain loss, which may and frequently does amount to 5 per cent. of the total fermentable sugars present; because part of these in the course of the vinous fermentation are converted into glycerine, succinic acid, and other bodies, which are fixed at the temperature of boiling water, and consequently remain with the residue.

For instance, 100 grm. of glucose or starch-sugar, after dissolving in water, and making up to 1 litre, would have a sp. gr. of about 1·030, and this corresponds to a percentage of the dried substance of 7·463; but as the substance has been weighed instead of being measured in c.c., the true percentage as contained in the solution will be 76·87 per cent. dry substance, and 23·13 per cent. water; ½ litre of the solution thus made is taken, and a sufficient quantity of fresh yeast which is active and in good condition, is added; the whole is then placed in a fermenting apparatus, so that the carbonic acid can escape after drying. After weighing the whole apparatus, it is placed on one side at a proper temperature for about 3 days, weighing at intervals in order to ascertain when the action is complete. The liquid in the flask to which the yeast has been added is then measured, and boiled in order to drive off any residual alcohol, and, after cooling, is made up to its original volume, and returned to the flask. The amount of fermentable sugars is ascertained by the difference between the weight of the entire apparatus before and after fermentation. Thus, if 500 c.c. contained originally dry substance equal to 76·87 per cent. of total matter, and the liquid after fermentation contains the equivalent of only 20·67 of unfermentable matters, the residue of fermentable sugars will be 56·20; adding to this 5 per cent. on the quantity found, say 2·04 per cent., gives 58·24 per cent. as the total amount of fermentable sugars probably present.

The main difficulty in this process is the time which it takes, and the fact that from possible non-activity of the yeast it is essential to make 2 analyses of each sample with yeast obtained from different sources.

The proportions of maltose, dextrine, and glucose in brewing sugars prepared from starch may be determined by the optical method in conjunction with Fehling's test. It is necessary first to determine the specific rotatory power of the sample, which is done by dissolving a known weight of the substance in water, and making up to a certain volume; the solid matter is determined from the sp. gr. of the solution, by dividing by 3·85. This figure is constant, and allows an increase of 3·86 in density for each 1 grm. of sugar or other carbohydrate in 100 c.c. of the liquid. The following example is given by A. H. Allen:—

(*a*) On ignition the sample left 0·63 per cent. of ash.

(*b*) The sp. gr. of a solution of 20 grm. of the sample diluted to 100 c.c. was 1063·32 at 15½° C. (60° F.). This figure divided by 3·85 gives:—

Total solids	82·23 per cent.
Less ash	0·63 ,, ,,
Carbohydrates	81·60 ,, ,,

(*c*) By Fehling's test the sample was found to have a reducing power equivalent to 72·6 per cent. of glucose. The reducing power of maltose may be taken as $\frac{62}{100}$ that of glucose.

(*d*) A solution of 20 grm. per 100 c.c. observed in a 2-decim. tube caused an angular rotation of + 23·7° for the sodium line D. Hence the value of [*a*] D for the sample was + 59·25°, thus—

$$[a]\,\mathrm{D} = \frac{23{\cdot}7}{2 \times \frac{20}{100}} = 59{\cdot}25.$$

The values of [*a*] D for dextrose, maltose, and dextrine are respectively + 52°, + 139°, and + 193°, ignoring fractional parts of a degree.

Let $[a]$ D be the apparent specific rotatory power, K the cupric oxide reducing power of the sample, and g, m, and d the respective amounts of glucose, maltose, and dextrine contained in 1 grm. of the sample. Then from the above data the following equations result:—

$$1.\ g + m + d = \cdot 816.$$
$$2.\ g + \cdot 62\, m = \mathrm{K} = \cdot 726.$$
$$3.\ 52\, g + 139\, m + 193\, d = [a]_{\mathrm{D}} = 59 \cdot 25.$$

From these

$$g = \cdot 726 - \cdot 62\, m.$$
$$d + g = \cdot 816 - m.$$
$$d + \cdot 726 - \cdot 62\, m = \cdot 816 - m.$$
$$\text{and } d = \cdot 09 - \cdot 38\, m.$$

Substituting the above values for g and d in equation 3 we get

$$52\,(\cdot 726 - \cdot 62\, m) + 139\, m + 193\,(\cdot 09 - \cdot 38\, m) = 59 \cdot 25.$$

Simplifying this,

$$37 \cdot 752 - 32 \cdot 24\, m + 139\, m + 17 \cdot 37 - 73 \cdot 34\, m = 59 \cdot 25.$$

Simplifying again, and transposing, we get

$$33 \cdot 42\, m = 4 \cdot 128,$$

whence

$$m = \cdot 1235.$$

The value of m being found, those of g and d are easily derived from equations 1 and 2. Thus:—

$$g = \cdot 726 - \cdot 62\,(\cdot 1235) = \cdot 726 - \cdot 07657 = \cdot 64943.$$
$$d = \cdot 816 - m - g = \cdot 816 - \cdot 1235 - \cdot 6494 = \cdot 0431.$$

As these values represent the respective weights of glucose, maltose, and dextrine in 1 grm. of the sample, the percentages will be 64·94, 12·35, and 4·31, together making up to 81·60 per cent.

Determination of Sugar by Fehling's Solution.—This process alone is incorrect as applied to brewing sugars, because maltose, which is almost invariably present, acts upon Fehling's solution in a different proportion to that in which dextrose acts; thus 10 c.c. Fehling's solution = ·0500 grm. dextrose, 10 c.c. Fehling's solution = ·0807 grm. maltose. This test, therefore, is only of relative value.

Rumpf and Heinzerling state that solutions of (1) caustic soda and sulphate of copper at the boiling point do not act on dextrine entirely free from sugar, which corrects Gerhardt's observation, who asserted that dextrine caused a reduction; (2) solutions of alkaline tartrates and Fehling's solution each act upon dextrine, making the results of the dextrose estimation too high in direct proportion to the length of time the heating is continued. When the reduction is quickly effected, and the heating is continued only a few minutes, they have found that the error in the estimation of dextrose in the presence of dextrine in starch sugars is too small to sensibly affect the results.

Anthon's method depends on the fact that the impurities present in commercial starch sugar have a greater density than the sugar. The process is somewhat empirical, but is said to give fairly accurate results. A saturated solution of starch sugar is made by dissolving an excess of sugar in a finely divided state in water. The sp. gr. of the clear solution thus produced is ascertained, and from this the percentage of impurity is calculated according to the table on next page.

Water.—This is determined by drying the sample after mixing it with dry and well-washed sand, as described under the analysis of sugars (see p. 675). When samples of solid glucose have to be examined for moisture, the solid matter is first melted in a weighed dish in the water-bath at a gentle heat, and a weighed quantity of sand is stirred in.

Admixture of Starch Sugar with refined Sugars.—It is

Density of Sat. Solution.	Per ct. of Impurities.	Density of Sat. Solution.	Per ct. of Impurities.	Density of Sat. Solution.	Per ct. of Impurities.
1·2060	0	1·2350	15	1·2587	30
1·2082	1	1·2368	16	1·2603	31
1·2104	2	1·2386	17	1·2618	32
1·2125	3	1·2404	18	1·2633	33
1·2147	4	1·2422	19	1·2649	34
1·2169	5	1·2440	20	1·2665	35
1·2189	6	1·2456	21	1·2680	36
1·2208	7	1·2473	22	1·2695	37
1·2228	8	1·2489	23	1·2710	38
1·2247	9	1·2506	24	1·2725	39
1·2267	10	1·2522	25	1·2740	40
1·2284	11	1·2535	26	1·2755	41
1·2300	12	1·2548	27	1·2770	42
1·2317	13	1·2561	28	1·2785	43
1·2333	14	1·2574	29		

stated that refined sugars are sometimes adulterated with starch sugar, and the following methods have been suggested for the detection of the adulteration. It does not appear that the admixture has ever been common in this country, but in America it is said to be of frequent occurrence; and it is quite possible that it may prove profitable, because not only is the price of glucose sometimes lower than that of refined sugar, but it is somewhat similar in colour.

If the suspected sugar is mixed with water and absolute alcohol, or with alcohol of 95 per cent., and the sugar is washed with it on the filter, there will in most cases be a white coagulum of dextrine left behind, which is recognised by its appearance. If cane sugar has been adulterated with starch sugar, the sample on solution in water generally leaves some particles of glucose, which do not dissolve easily or readily. They are mostly white in colour, and if they are sufficient in quantity, it will be found that, on dissolving them in a larger quantity of water, and submitting them to the polariscopic test, the reading is markedly different to that of cane sugar, and not only so, but it gradually, diminishes for some hours after the solution has been made. As the rotatory power of starch sugar widely differs from that of cane sugar, samples which are adulterated with any notable proportion of

starch sugar will give a reading differing from that which is due to the cane sugar present.

Casamajor has recommended the use of methylic alcohol of 50 per cent. strength, saturated with starch sugar, as a solution for the purpose of detecting the admixture of starch sugar with cane sugar. The mode of applying this test is to wash the suspected sugar with the saturated solution of starch sugar in methylic alcohol, which readily dissolves the cane sugar and other impurities, leaving the starch sugar insoluble; this method, though of value as a qualitative test, cannot be recommended for quantitative work.

Chandler and Rickett's method is probably the best which has yet been proposed for the detection of starch sugar in cane sugar, but it is not readily applicable, and is attended with some degree of difficulty in execution. It depends upon the fact that the rotation of a solution of levulose varies with the temperature, while the rotation of dextrose is constant for all temperatures. As invert sugar consists of a mixture of dextrose and levulose in equal proportions, it follows that there is a certain temperature at which invert sugar has no effect upon the polariscope. If, therefore, a sample of commercial sugar, whether raw or refined, is inverted and heated to a certain definite temperature, viz. 87·2° C. (189° F.), the rotation of the levulose is neutralised by the dextrose, and the sample does not produce any rotation. Hence if the tube containing the solution of the sample is placed between the polariser and the analyser, and surrounded by a jacket or water-bath in such a way that its temperature can be kept at 87·2° C. (189° F.), the rotatory effect due to the cane sugar is eliminated, and the rotation which is found by the optical examination is due entirely to glucose or intermediate products present. It is obvious that this method requires a special apparatus, inasmuch as the water-bath must be kept uniformly at a fixed temperature; but it is a decided advantage in detecting the presence of the adulterant if its quantity is at all notable, though it is not of use for detecting

the character of that adulterant without the use of additional processes.

Composition of Commercial Sugars.—The following are analyses of characteristic raw and refined commercial sugars :—

Raw Sugars	Crystallisable Sugar	Uncrystallisable Sugar	Ash	Moisture	Unknown Organic Matters
Barbados	91·55	2·50	·70	3·70	1·55
Jamaica	91·90	2·80	·72	3·55	1·03
Trinidad	87·30	4·80	1·30	3·86	2·74
Brazilian Muscovados	91·50	1·10	1·24	3·30	2·86
Java	98·20	·75	·20	·37	·48
Manilla	76·00	8·70	4·50	4·00	7·00
Mauritius	84·50	3·63	3·38	3·30	5·19
Palmyra Jaggery	83·20	2·20	4·00	5·94	4·66
	77·00	6·80	5·66	5·70	4·84
Cane Jaggery	79·00	7·13	3·37	6·46	4·04
	64·00	16·40	2·95	7·92	8·73
Beetroot	90·05	nil	2·93	3·38	3·64
,,	91·30	nil	2·18	3·31	3·21
,,	92·01	traces	1·95	3·09	2·93
,,	94·30	nil	1·26	2·26	2·18
,,	96·10	nil	·93	1·50	1·47
Refined sugars—					
Granulated	99·95	nil	traces	traces	nil
Cube sugar	99·90	nil	traces	traces	nil
Crystals	99·90	nil	traces	traces	nil

ANALYSES OF SUGARS, SHOWING THEIR MINERAL CONSTITUENTS.

—	Dutch Bastards	Guatemala	Good Penang	Low Penang	Medium Penang
Sugar	84·600	88·500	88·030	74·010	82·750
Glucose	7·810	6·120	4·620	17·440	8·220
Moisture	4·700	2·760	3·540	6·220	5·100
*Ash	1·980	1·674	3·258	1·764	2·754
Unestimated	·910	·946	·552	·566	1·176
	100·000	100·000	100·000	100·000	100·000
*Containing :—					
Siliceous matter	·300	·300	·120	·660	1·200
Potash	·331	·408	·715	·578	·237
Soda	·003	·012	·011	·026	·005
Lime	·147	·100	·291	·291	·100
Sulphuric acid	·336	·034	·373	·081	·061
Chlorine	·068	·102	·495	·053	·049

—	Cane Jaggery	Clayed Manilla	Ilo Ilo Manilla	Egyptian	Egyptian
Sugar	78·850	84·540	82·730	86·000	83·760
Glucose	10·420	8·220	9·460	5·100	7·810
Water	5·700	3·450	4·680	3·740	4·080
Ash	4·212	2·844	2·160	3·348	3·114
Unestimated	·818	·946	·970	1·812	1·236
	100·000	100·000	100·000	100·000	100·000
Siliceous matter	1·460	·880	·260	·480	·140
Potash	·497	·235	·585	·538	·638
Soda	·015	·015	·005	·029	·027
Lime	·291	·247	·156	·212	·224
Sulphuric acid	·177	·068	·100	·343	·377
Chlorine	·272	·063	·078	·201	·379

ANALYSES OF SUGARS, SHOWING THEIR MINERAL CONSTITUENTS.

Manilla.

Composition of the Sugar :—

Sugar	82·40
Glucose	8·20
Water	5·07
Soluble ash	1·60
Insoluble ash	0·22
Other organic matter	2·51
	100·00

Composition of the Soluble Ash :—

Chloride of sodium	9·61
Sulphate of potassium ..	16·14
Carbonate of potassium ..	35·20
Carbonate of calcium	24·09
Carbonate of magnesium ..	11·18
Tribasic phosphate of lime ..	3·78
Soluble silica	trace

Composition of the Insoluble Ash :—

Lime	19·11
Magnesia	3·43
Peroxide of iron	8·33
Alumina	4·41
Silica	56·85
Phosphoric acid (P_2O_5) ..	7·87
	100·00

Cane Jaggery.

Composition of the Sugar :—

Sugar	73·30
Glucose	10·50
Water	5·03
Soluble ash	2·48
Insoluble ash	1·22
Other organic matter	7·47
	100·00

Composition of the Soluble Ash :—

Chloride of sodium	6·69
Chloride of potassium	25·75
Sulphate of potassium	17·81
Carbonate of potassium ..	16·79
Carbonate of calcium	8·19
Carbonate of magnesium ..	15·54
Tribasic phosphate of lime ..	9·23
Soluble silica	trace
	100·00

Composition of the Insoluble Ash :—

Lime	7·54
Magnesia	2·25
Peroxide of iron	6·44
Alumina	trace
Silica	76·49
Phosphoric acid (P_2O_5) ..	7·28
	100·00

Analyses of two samples of Demerara sugar, the sample marked A being greyish sugar, and that marked B consisting of good quality Demerara.

	A	B
Sugar	97·20	97·10
Glucose	0·87	1·35
Water	0·78	0·73
Ash	0·32	0·54
Unestimated matter	0·83	0·28
	100·00	100·00

Analyses of the Ash or Mineral matter in the above two samples of Demerara sugar. Constituents being given in the combined state.

	A	B
Chloride of sodium	14·70	25·99
Chloride of potassium	6·84	nil
Sulphate of soda	nil	8·45
Sulphate of potash	9·16	20·95
Sulphate of lime	35·34	10·17
Tribasic phosphate of lime	12·84	10·20
Carbonate of lime	4·78	9·20
Carbonate of magnesia	9·03	9·40
Peroxide of iron	0·27	0·20
Alumina	1·05	0·94
Silica	5·99	4·50
Total	100·00	100·00

Analysis of Char.—The following is a brief account of one or more methods by which the principal ingredients in char may be determined.

Determination of Moisture.—5 grams are weighed into a tared porcelain dish and heated in an air bath to 250° F. for some hours until the weight directly after cooling remains constant between two successive weighings made at intervals of an hour or two. The loss of weight multiplied by twenty gives the percentage of moisture. Chemists are by no means agreed as to the temperature at which char ought to be dried; thus, Patterson recommends 212° F. and Wallace 350° F., while 250° F. is used by many. It is therefore absolutely necessary in stating the percentage of moisture to also give the temperature at which the result has been obtained.

Determination of Carbon.—5 grams are heated with a mixture of 25 c.c. hydrochloric acid and 70 c.c. water to gentle ebullition and kept so for 15 minutes, the whole is then transferred to a tared filter, and thoroughly washed with boiling water until the washings give no precipitate with nitrate of silver, and is then dried at 250° F., until the weight remains constant when taken at intervals of an hour or so. The tared filter used for this purpose must be previously dried at 250° F. and weighed in a stoppered glass tube till the weight is constant, and the filter with the carbon in it is also weighed in the same tube. The increase of weight gives the joint amount of carbon and silica, and by carefully incinerating the filter and its contents in a platinum dish and weighing the residue the weight of the silica is obtained, and this deducted from the total weight gives the carbon.

Determination of Lime.—One gram is dissolved in dilute hydrochloric acid, being heated with it for some minutes, and the insoluble siliceous matter is then separated by filtration and the filter is washed with hot water till the washings are free from chlorine. To the filtrate dilute ammonia is now added drop by drop until a faint opalescence is produced, due to the precipitation of a trace of tribasic phosphate of lime. A few drops of a dilute solution of oxalic acid are next added until this trace of phosphate of lime has been converted into oxalate, which change is easily noticed by the precipitate becoming granular. A strong solution of oxalate of ammonia is now added in quantity sufficient to precipitate all the lime as oxalate. The liquid is heated to the boiling-point for a few minutes and the precipitate is thrown upon a filter (double Swedish, by preference), which is afterwards washed, dried, and incinerated in a platinum dish. The precipitate must then be well moistened with solution of carbonate of ammonia and gently heated over a Bunsen flame to expel all ammonia salts. Then weigh and repeat the addition of carbonate of ammonia with subsequent heating until the weight of the

precipitate, which now consists of carbonate of lime, remains stationary. 100 parts of carbonate of lime = 56 parts of lime.

Determination of Phosphoric Acid, P_2O_5.—To the filtrate from the precipitate of lime, as oxalate, just described, add a few grams of citric acid and stir till it has dissolved. Then add ammonia in slight excess, and afterwards ammoniacal solution of magnesia mixture in moderate excess. Stir well, taking care not to scratch the sides of the beaker, which would cause the precipitate to adhere to it, and leave the whole to stand for 12 hours or so. Then filter, removing any adhering precipitate by means of a quill with a small piece of feather remaining on it. Wash with dilute ammonia till the washings, after a portion has been acidified with nitric acid, give no indication of chlorine when tested with nitrate of silver. The precipitate, when dry, should be detached as far as possible from the filter and carefully ignited in a platinum crucible, which is then allowed to cool, the filter being afterwards ignited and added to the contents of the crucible, and the whole well heated till the carbonaceous matter has been completely burned off.

The residue in the crucible consists of pyrophosphate of magnesia, of which 222 parts = 142 parts of phosphoric acid, or 310 parts of tribasic phosphate of lime.

Determination of Magnesia.—Take the filtrate from the carbon determination, representing 5 grams of char, separate the lime, and then add a few grams of citric acid and make the solution ammoniacal. Then add solution of phosphate of ammonia in excess and stir well and allow to stand for 12 hours, when the precipitate of phosphate of magnesia and ammonia will settle out. This precipitate must be treated as mentioned under phosphoric acid, and weighed as pyrophosphate of magnesia, of which 222 parts = 80 parts magnesia.

Determination of Peroxide of Iron and of Alumina.—To the dilute solution of 5 grams of char, from which the siliceous

matter has been separated, add enough acetate of ammonia to precipitate all the peroxide of iron and the alumina as phosphate. Warm gently and allow to stand some time, then filter, wash, dry, incinerate, and weigh. The weight gives the peroxide of iron and the alumina as phosphates. The precipitate is next dissolved in warm dilute hydrochloric acid and the resulting solution is divided into two equal portions. In one half the phosphoric acid is determined in the manner already given, and in the other the amount of peroxide of iron is found by reduction with zinc and subsequent titration with a standard solution of permanganate of potash. The joint weights of phosphoric acid and peroxide of iron must be deducted from the total weight of the phosphate of peroxide of iron and alumina, and the remainder is alumina.

Determination of Organic Matter.—Incinerate 2 grams in a platinum dish until all the carbonaceous matter has been oxidised. Allow to cool, and moisten with carbonate of ammonia solution, and subsequently heat to drive off ammonia salts, allow to cool and weigh. Repeat this last-named treatment until the weight is constant. From the loss of weight deduct the moisture and carbon as previously obtained, and the difference gives the organic matter. When new char has been incinerated the residual ash will be of a uniform white or cream colour, but the ash left by spent char is usually red, owing to the peroxide of iron present.

Determination of Carbonate of Lime.—This may be effected by the use of a carbonic acid apparatus, consisting of a small flask, provided with a tightly fitting cork, through which pass two glass tubes. The longer of these tubes extends from an inch above the upper surface of the cork to nearly the bottom of the flask, and its upper end is closed during the greater part of the process by a small cork stopper. The shorter tube has its lower extremity projecting only slightly below the cork, and its upper extremity is connected with a wide tube containing anhydrous chloride of calcium,

terminating in a small orifice. The cork of the apparatus having been removed, 2 grm. of the char are introduced into the flask, and a little water is then added. A small tube three-fourths full of strong hydrochloric acid and attached to a fine thread is carefully lowered into the flask, taking care to keep it as vertical as possible. The cork of the apparatus is replaced, and the whole is weighed. The apparatus is then tilted so as to upset the hydrochloric acid in the tube, and this decomposes the carbonate of lime, the carbonic acid given off being deprived of any accompanying moisture by passing through the chloride of calcium. The apparatus should now be gently warmed to complete the action, and then allowed to cool, when the cork stopper is removed from the long tube and a current of dry air is drawn through the apparatus to remove any carbonic acid. The cork stopper is replaced, and the apparatus is reweighed, when the loss of weight gives the amount of carbonic acid produced from the 2 grams of char. This multiplied by 50 gives the percentage of carbonic acid, of which 44 parts are equal to 100 parts of carbonate of lime.

Determination of Carbonate of Lime by the use of Scheibler's Calcimeter.—This method is not very accurate, but the results are to be relied upon within 0·2 to 0·3 per cent., and therefore sufficiently near for ordinary work in refineries. The apparatus is shown in Fig. 219, and consists of the following parts. The evolution-bottle A, in which the sample of char is treated with hydrochloric acid, contains the glass tube S. The bottle is shown in two positions, one standing on the base-board, and the other when lifted in the hand during the process of analysis. The glass stopper of the flask A is perforated, and carries a tube to which is joined an indiarubber tube *r*, connecting the flask A with the bottle B. This bottle B has an indiarubber stopper with 3 holes, each fitted with a tube; the tube joined to *r* passes a short distance inside the vessel B, and the end of it is fastened to a thin

indiarubber bag or bladder, similar to those commonly used for making toy balls. Tube *g* has a piece of indiarubber tubing connected with it, which is closed by a pinchcock while

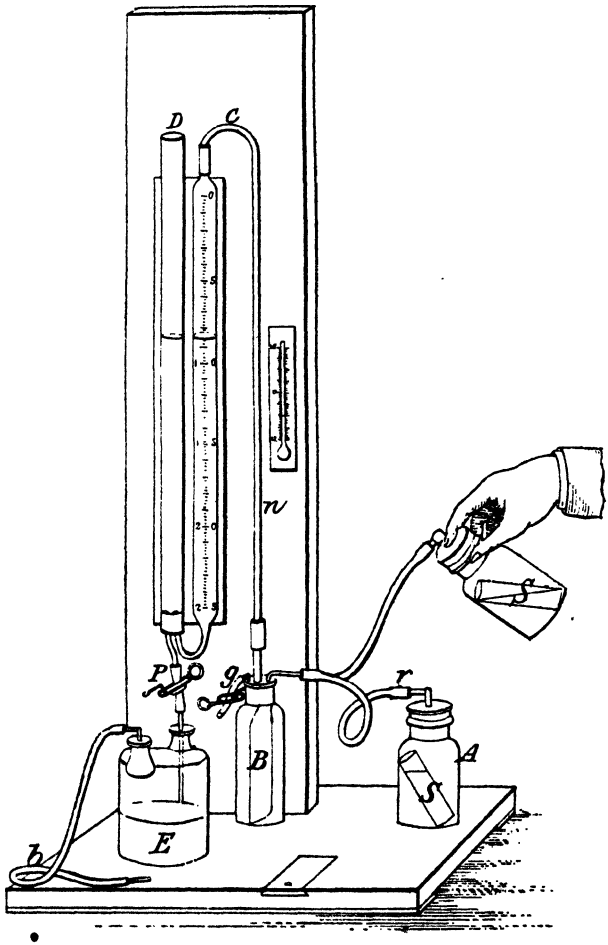

FIG. 219.—SCHEIBLER'S CALCIMETER.

the estimation is being made, and serves to bring the vessel B into communication with the air when necessary. The glass tube *n* connects the interior of the vessel B with the top of the

graduated tube C, which is divided into 25 equal parts (about 4 c.c. each), each division being subdivided into tenths; the lower part of this is in communication with the straight tube D, which is open at the upper end and closed at the lower end by an indiarubber cork pierced with two holes, through one of which is passed a tube leading from the graduated tube C and through the other a tube leading to the two-necked Wolff-bottle E, the action between the two being regulated by the pinchcock P. E is a reservoir for water, and C D are filled from it by blowing through the flexible tube *b*, the pinchcock P preventing the reflux of the water. The whole apparatus, excepting the bottles, is fastened to an upright board, and the bottles are supported when necessary on a shelf attached to the board.

The test of a sample of char is carried out in the following way. By blowing through the flexible tube *b*, the liquid is forced into the tubes C and D until it reaches a little above the zero point in C, when it is allowed to fall by opening P until the level in C is at zero. The water must not be allowed to flow into B, as if this were done, it would be necessary to take the apparatus to pieces to dry B. A sample of the char is reduced to powder, and the normal weight, viz. 1·702 grm., is placed in the flask A, which is carefully dried before use and the small tube S is nearly filled with dilute hydrochloric acid of sp. gr. 1·120, and is cautiously placed in the flask, so that none of the acid shall be spilled. The stopper which should be well greased, is now placed in A, and connection made with B by means of the tube *r*. If the levels of the liquids in D and C are unequal, the cock *g* must be opened for a few seconds to allow them to recover their normal level. The vessel A is now lifted from the shelf into the upper position shown, so that the acid may flow out of the tube and come into contact with the char; the flask being then gently shaken so as to cause the acid to mix thoroughly with the sample. The gas evolved escapes into the india-

rubber bag contained in the flask B, which, expanding, forces air up the tube *n*, and depresses the column of water in the graduated tube C. The stopcock P is now cautiously opened, so as to let the water in the tube D flow out, keeping the level of the water in the two tubes as nearly as possible alike. When all the gas has been given off, and the level of the liquid in the tube C becomes stationary, the liquid in the two tubes is brought to the same level by opening the pinch-cock P, and the volume and temperature are read off. The table on p. 722 gives the percentage of carbonate of lime corresponding to each division as read off on this instrument, when the normal weight has been used, with the proper corrections for temperature (in degrees C.).

Determination of Sulphuric Acid: SO_3.—5 grams of char are dissolved in warm dilute hydrochloric acid, the solution is filtered, and the filter is washed. To the filtrate add excess of chloride of barium, warm the liquid, filter, wash, dry, incinerate, and weigh: 233 parts of the resulting sulphate of baryta = 80 parts of sulphuric acid, or 32 parts of sulphur.

Determination of Sulphides.—5 grams of char are heated with 14 c.c. of a mixture of equal parts of hydrochloric and nitric acids, the latter acid serving to oxidise any sulphide into sulphate. Then proceed as in the previous determination. This result gives the sulphate of baryta equal to the total sulphur, and from this the sulphate of baryta equal to the sulphuric acid must be deducted, the difference being calculated into sulphur, or sulphide of calcium: 233 parts of sulphate of baryta = 72 sulphide of calcium.

Determination of Chlorine.—New char contains an appreciable amount of chlorine in the form of common salt (chloride of sodium), but in old char there is only a minute proportion left, the greater part having been removed by repeated washing. To determine the chlorine take 10 grams of the char, add some hot water, stir well, and filter. Wash the residue on the filter till the washings no longer give any turbidity with

TABLE FOR CALCULATING THE PERCENTAGE OF CARBONATE OF LIME FROM THE VOLUME OF CARBONIC ACID: FOR USE WITH SCHEIBLER'S CALCIMETER.

Volume read.	12°	13°	14°	15°	16°	17°	18°	19°	20°	21°	22°	23°	24°	25°	26°	27°	28°	29°	30°
1	·80	·80	·79	·79	·79	·78	·78	·77	·77	·77	·76	·76	·76	·75	·75	·74	·74	·73	·73
2	1·88	1·87	1·86	1·86	1·85	1·84	1·83	1·81	1·81	1·80	1·79	1·79	1·78	1·77	1·76	1·75	1·74	1·73	1·72
3	2·95	2·94	2·92	2·91	2·90	2·89	2·87	2·86	2·85	2·83	2·82	2·80	2·79	2·77	2·76	2·74	2·73	2·72	2·71
4	4·01	4·00	3·98	3·96	3·94	3·93	3·91	3·89	3·87	3·85	3·83	3·81	3·79	3·77	3·75	3·73	3·71	3·70	3·68
5	5·07	5·05	5·03	5·00	4·98	4·96	4·93	4·91	4·87	4·86	4·84	4·81	4·79	4·76	4·74	4·71	4·69	4·67	4·65
6	6·11	6·09	6·06	6·03	6·01	5·98	5·95	5·92	5·89	5·86	5·83	5·81	5·78	5·75	5·71	5·68	5·65	5·63	5·61
7	7·14	7·12	7·09	7·06	7·02	6·99	6·96	6·92	6·89	6·86	6·82	6·79	6·75	6·72	6·68	6·65	6·61	6·58	6·56
8	8·17	8·14	8·11	8·07	8·03	8·00	7·96	7·92	7·88	7·84	7·80	7·76	7·72	7·68	7·64	7·59	7·55	7·53	7·49
9	9·19	9·16	9·12	9·07	9·03	8·99	8·95	8·90	8·86	8·82	8·77	8·73	8·68	8·64	8·59	8·55	8·50	8·46	8·42
10	10·20	10·16	10·12	10·07	10·02	9·98	9·93	9·88	9·83	9·79	9·73	9·68	9·63	9·58	9·53	9·48	9·43	9·39	9·34
11	11·20	11·15	11·10	11·05	11·00	10·95	10·89	10·84	10·79	10·74	10·68	10·63	10·57	10·52	10·46	10·41	10·35	10·30	10·25
12	12·20	12·15	12·09	12·03	11·98	11·92	11·87	11·81	11·75	11·69	11·64	11·58	11·52	11·46	11·40	11·33	11·27	11·22	11·16
13	13·20	13·14	13·08	13·02	12·96	12·90	12·84	12·78	12·72	12·65	12·59	12·53	12·46	12·40	12·33	12·26	12·20	12·14	12·07
14	14·20	14·14	14·07	14·01	13·94	13·88	13·81	13·75	13·68	13·61	13·54	13·48	13·41	13·34	13·26	13·19	13·12	13·05	12·99
15	15·20	15·13	15·06	14·99	14·92	14·85	14·78	14·71	14·64	14·57	14·50	14·42	14·35	14·27	14·20	14·12	14·04	13·97	13·90
16	16·20	16·13	16·05	15·98	15·91	15·83	15·76	15·68	15·61	15·53	15·45	15·37	15·29	15·21	15·13	15·05	14·97	14·89	14·81
17	17·20	17·12	17·04	16·97	16·89	16·81	16·73	16·66	16·59	16·49	16·41	16·32	16·24	16·15	16·07	15·98	15·89	15·81	15·72
18	18·20	18·12	18·03	17·95	17·87	17·79	17·70	17·62	17·53	17·45	17·36	17·27	17·18	17·09	17·00	16·91	16·82	16·73	16·63
19	19·20	19·11	19·03	18·94	18·85	18·76	18·67	18·59	18·50	18·40	18·31	18·22	18·13	18·03	17·94	17·84	17·74	17·64	17·55
20	20·20	20·11	20·02	19·93	19·83	19·74	19·65	19·55	19·46	19·36	19·27	19·17	19·07	18·97	18·87	18·77	18·66	18·56	18·46
21	21·20	21·10	21·01	20·91	20·81	20·72	20·62	20·52	20·42	20·32	20·22	20·12	20·01	19·91	19·80	19·70	19·59	19·48	19·37
22	22·20	22·10	22·00	21·90	21·80	21·70	21·59	21·49	21·39	21·28	21·17	21·07	20·96	20·85	20·74	20·63	20·51	20·40	20·28
23	23·20	23·09	22·99	22·88	22·78	22·67	22·56	22·46	22·35	22·24	22·13	22·02	21·90	21·79	21·67	21·55	21·43	21·32	21·20
24	24·20	24·09	23·98	23·87	23·76	23·65	23·54	23·43	23·31	23·20	23·08	22·97	22·85	22·73	22·61	22·48	22·36	22·23	22·11
25	25·20	25·08	24·97	24·86	24·74	24·63	24·51	24·39	24·28	24·16	24·04	23·91	23·79	23·67	23·54	23·41	23·28	23·15	23·02

nitrate of silver and a few drops of nitric acid. To the clear liquor, when cold, add a few drops of a solution of chromate of potash, then run in from a burette standard solution of nitrate of silver, with occasional stirring until a faint reddish tinge is produced. From the number of c.c.'s of nitrate of silver taken, it is easy to calculate the percentage of chlorine: 35·5 parts of chlorine = 58·5 parts of chloride of sodium.

Determination of Arsenic.—20 grams of the char are treated with successive portions of hydrochloric acid, sp. gr. 1·100, and gently warmed. The solution is poured into the generating flask of a Marsh-Berzelius arsenic apparatus, and the deposit of arsenic, if any, compared with the mirror given by known quantities of arsenious oxide in hydrochloric acid.

Detection of Fluorine.—There is a small amount of fluoride of calcium present in char, and it may be tested for as follows: Incinerate 10 grams of char in a platinum dish, until all the carbonaceous matter has been removed. When cold, thoroughly moisten the residue with strong sulphuric acid, and cover it with a glass plate which has been previously coated with a thin surface of wax on its under side, the wax however, having been scraped off in a few places by a pen. The dish must now be heated gently, care being taken not to melt the wax, and after some time, on taking away the glass plate and removing the wax therefrom, it will be found to be permanently etched by the action of hydrofluoric acid upon the silica of the glass.

Determination of Nitrogen.—Two grams may be taken for this operation which is carried out by the usual combustion process with soda-lime in an iron tube, the ammonia given off being collected in 25 c.c. of standard hydrochloric acid contained in a set of bulbs. After the combustion is over the acid is transferred to a beaker and a few drops of litmus added. Standard ammonia is then run in from a burette until the bright red tint of the solution just begins to turn blue. The number of c.c. of ammonia used is then read off,

and deducted from that required to neutralise 25 c.c. of the standard acid. The difference × the ammonia contained in each c.c × 50 = percentage of ammonia produced from the char. To turn this into nitrogen × 14 and ÷ the product by 17.

Determination of the number of cubic feet in a ton of Char, or of the number of pounds to a cubic foot.—To ascertain this, take a cubic measure holding one-tenth of a cubic foot, and balance it when empty against a counterpoise. The measure is then filled with char (adding a slight excess and removing such excess by drawing a straight-edge across the top). The weight taken with avoirdupois weights × 10 gives the number of pounds in a cubic foot of char, and from this the number of cubic feet in a ton can be easily reckoned.

Apparent Specific Gravity of Char.—The method just described gives the number of pounds in a cubic foot of char, and if this be divided by the weight of a cubic foot of water, viz. 62·5 lb., the quotient gives the apparent specific gravity of the char.

Real Specific Gravity of Char.—This is obtained by placing 100 grams of the char in a counterpoised 200 c.c. flask, adding water till it is well covered, boiling for some time to remove the air, then cooling, filling up to the mark, and weighing at 60° F. The amount of water displaced by the char is obtained by comparison with the actual contents of the flask (200 grams), and gives the real specific gravity of the char.

When char is repeatedly reburned it becomes less porous and shrinks in volume, so that a ton of char which, when new, measures 48 to 54 cubic feet, may be reduced to as low as 28 cubic feet after being many times reburned, or, in other words, its apparent density may be nearly doubled. Dr. Wallace has, however, shown that the real specific gravity varies but little, thus a new char occupying 50·6 cubic feet per ton, or having an apparent specific gravity of 0·71, had a real specific gravity of 2·822, whilst a moderately old sample

occupying 35 cubic feet per ton, or having an apparent specific gravity of 1·03, had a real specific gravity of 2·857, or only a trifle over that of the new. Another proof that char loses its porosity to a considerable extent by long continued use and reburning is afforded by the fact, pointed out by Dr. Wallace, that dry new char will absorb from 80 to 100 per cent. of its weight of water, whereas old char will only retain from 30 to 45 per cent.

Mode of Dividing the Space occupied by Char into Interstices, Pores, and Solid Structure.—This process, which was formerly employed in the laboratory of Fryer, Benson, and Forster, of Manchester, is carried out in the following way. Reduce glass to a rough powder, and separate it by sifting in grists of known sizes. Put a given volume of glass of known grist into a counterpoised 100 c.c. flask, add water to cover it, boil to expel any adhering air, cool, fill up to the mark with water, weigh, and note how much water has been required. Next, put the same volume of char of the same grist as the glass into a 100 c.c. counterpoised flask, cover it with water, boil, cool, fill up to mark, and weigh as before.

The difference gives the quantity of water which the pores of the char have absorbed. By noting the amount of water taken in by the standard glass sample, the volume of interstices is obtained. The space occupied by char of known grist can thus be divided into interstices, pores, and solid structure. So long as char is properly burned, the volume of pores is a good index of quality, and it keeps a regular relation to the specific gravity.

Determination of the Grist of Char.—For this purpose it is usual to employ a set of circular sieves having respectively 10, 20, 30, 40, 50 and 60 holes to the linear inch. These are so constructed that the bottom of one fits into the top of the next, the 10-hole sieve being uppermost, and the 60 hole sieve fitting into a circular vessel, the bottom of which is closed so as to collect the dust, the whole set when in use being thus

joined together. 1000 grams of the char are placed upon the uppermost sieve, and the whole set is shaken backwards and forwards for a few minutes. Each sieve is removed in turn and its contents weighed; whatever passes through the 60-hole sieve is found in the closed vessel and weighed as "dust."

Decolorising Power of Char.—The decolorising power of char may be determined in the laboratory by comparing the colour of a molasses, diluted to 4 or 5 times its weight, before and after being heated with the char. For comparisons, the similarity of the gristing of the two chars must be attended to. 200 grams of molasses are diluted to a litre and poured over 100 grams of char in a flask or porcelain basin, and heated to boiling for five minutes. After cooling, the weight is made up to the same as before boiling by the addition of water, and the whole well shaken up and filtered. The colour is then taken in a colorimeter and compared with that of the original dilute molasses. It may also be determined by placing a known weight of the char in a vertical glass tube, 2 inches in diameter and 2 feet 6 inches high, which is open at the top and closed at the bottom by means of a conical brass screw-cap with a tap and a small circular piece of wire gauze covered with felt, to retain the char in the tube. The tube is supported by a convenient stand, and a hot solution containing a known weight of the sugar to be tested is then run on to the char, the portion first passing through being returned to the tube. It is convenient to employ about 900 c.c. of solution of sugar at 27° B. hot, and to try the experiment with 600 grams of char, the amount of colour left in the liquor being estimated in one of the numerous forms of colorimeters now employed. The relative decolorising power of a given char can thus be found by testing it against an equal weight of a standard sample of char treated in precisely the same manner with a known amount of sugar solution. The methods of testing char by estimating its power of absorbing sucrate of lime or caramel from a solution are not to be re-

commended, as the results do not agree with those obtained with sugar solution.

Duboscq's colorimeter, which is perhaps most generally used, consists of two glass cylinders side by side, one of which is destined to receive the solution to be examined, and the other the standard liquor. Two small tubes capable of being moved up and down through the corks which close the tops of the larger tubes are shut at the bottom by clear glass plates, and passed through the corks. Below the larger tubes is a mirror to reflect the light in a vertical direction through them, and above them are two double-reflecting prisms, which bring the images of the two smaller tubes side by side into the luminous field of a small Galilean telescope. In this instrument the samples are compared with a solution of the sugar of the same strength which has been merely filtered through paper. If the colour left in solution be too intense to allow of accurate reading, the liquor must be diluted with once or twice its own bulk of water, and then tested in the colorimeter, allowance being made for the dilution.

Lovibond's tintometer will be found to answer very well for determining the amount of colour left. Instead of using a tube for the char, flasks may be employed in which a known weight of char is heated with a given weight of sugar solution, for a specified time, and then the contents are filtered and the colour is determined in a colorimeter.

The mode of stating the results of the analysis of char will now be illustrated by a few examples.

ANALYSES OF NEW CHAR.

Calculated on the dry.

Carbon	10·18	9·60
Phosphates of lime and magnesia	80·60	81·93
Carbonate of lime	8·43	7·78
Sulphate of lime	0·20	0·23
Peroxide of iron	0·10	0·12
Siliceous matters	0·29	0·18
Common salt (chloride of sodium)	0·20	0·16
	100·00	100·00

Moisture originally present	4·50 ..	3·72
Space occupied by a ton dry	50 cubic ft.	46 cubic ft.
Sizes:—		
Above 10 meshes to the linear inch	4 ..	0
From 10 to 20 meshes to the linear inch ..	90	36
20 to 30 ,, ,, ,, ..	2	29
30 to 40 ,, ,, ,, ..	1	25
40 to 50 ,, ,, ,, ..	2	8
Below 50, or dust	1 ..	2
	100	100

The following detailed analyses give the composition of the working chars in a refinery, in which 3 qualities of char were kept separate, No. I. being the most recent and No. III. the oldest. Even the newest of these had been some time in use, as shown by the large amount of iron contained in it.

ANALYSES OF THE STOCK CHARS FROM A REFINERY.
Calculated on the dry at 250° F.

	I.	II.	III.
Carbon	10·25	10·48	10·19
Organic matter	1·36	1·31	1·08
Tribasic phosphate of lime	78·89	79·05	79·98
Carbonate of lime	2·57	2·07	1·72
Sulphate of lime	0·43	0·30	0·27
Sulphide of calcium	0·17	0·15	0·13
*Lime	3·76	3·51	3·48
Tribasic phosphate of magnesia	0·38	0·36	0·27
Peroxide of iron (ferric oxide)	0·69	0·94	0·99
Alumina	0·27	0·44	0·56
Sand	1·23	1·39	1·33
	100·00	100·00	100·00
Moisture at 250° F.	0·84	0·80	0·88

* This lime does not exist in the free state, but is probably in combination with the Phosphoric Acid P_2O_5, forming a more basic combination than Tribasic Phosphate of Lime.

The carbon in char always contains a certain proportion of nitrogen, amounting sometimes to one-tenth of its weight; there is also a minute proportion of hydrogen present. The nitrogen becomes continually less and less whilst the char is being used for sugar refining.

Further particulars relating to char will be found in the Chapters on Sugar Refining and on Animal Charcoal.

RUM AND OTHER ALCOHOLIC SPIRITS

CHAPTER XXIV.

PURE spirit or alcohol is a liquid substance, composed of carbon hydrogen, and oxygen, in the following proportions :—

Carbon	52·17
Hydrogen	13·04
Oxygen	34·79

Vinous alcohol is the most important member of an important series of organic compounds, all of which resemble each other closely, and possess many analogous properties. They are now classed by the chemist under the generic title of "Alcohols." Vinous alcohol is the principle of all spirituous fermented liquors. The intoxicating properties of these liquors, due to the presence of this principle, have been known since the earliest times; but it was not until about the beginning of the fourteenth century that the principle was isolated in a nearly pure state.

Alcohol is the product of the decomposition of sugar, or, more properly, of glucose, which under the influence of certain organic, nitrogenous substances, called ferments, is split up into alcohol and carbonic anhydride. The latter is evolved in the form of gas, alcohol remaining behind mixed with water, from which it can be separated by distillation. The necessary purification is effected in a variety of ways.

Pure, absolute alcohol is a colourless, mobile, very volatile

liquid having a hot, burning taste, and a pungent and somewhat agreeable odour. It is very inflammable, burning in the air with a blue non-luminous flame, evolving much heat, leaving no residue, and forming carbonic anhydride and water. Its specific gravity at 0° C. (32° F.) is 0·8095, and at 15·5° C. (60° F.), 0·794; that of its vapour is 1·613. It boils at 78·4° C (173° F.). The boiling-points of its aqueous mixtures are raised in proportion to the quantity of water present. Mixtures of alcohol and water when boiled give off at first a vapour rich in alcohol, and containing but little aqueous vapour; if the ebullition be continued, a point is ultimately reached when practically all the alcohol has been driven off, and all but pure water remains Thus by repeated distillation alcohol may be obtained from its mixture with water in an almost anhydrous state.

The following table by Otto gives the boiling-points of alcoholic liquids of different strengths, and the proportions of alcohol in the vapours given off:—

Proportion of Alcohol in the Boiling Liquid in 100 vols	Temperature of the Boiling Liquid. Degrees Cen.	Proportion of Alcohol in the Condensed Vapour in 100 vols.	Proportion of Alcohol in the Boiling Liquid in 100 vols.	Temperature of the Boiling Liquid. Degrees Cen.	Proportion of Alcohol in the Condensed Vapour in 100 vols.
90	78·8	92	15	90·0	66
80	79·4	90·5	12	91·3	61
70	80·0	89	10	92·5	55
60	81·3	87	7	93·8	50
50	82·5	85	5	95·0	42
40	83·8	82	3	96·3	36
30	85·0	78	2	97·5	28
20	87·5	71	1	98·8	13
18	88·8	68	0	100·0	0

Absolute alcohol has a strong affinity for water. It absorbs moisture from the air rapidly, and thereby becomes gradually weaker; it should therefore be kept in tightly-stoppered bottles. Considerable heat is disengaged when alcohol and water are brought together; if, however, ice be substituted for

water, heat is absorbed, owing to the immediate and rapid conversion of the ice into the liquid state. When 1 part of snow is mixed with 2 parts of alcohol, a temperature as low as −21° C. (5° F.) is reached.

When alcohol and water are mixed together, the resulting liquid occupies, after mixing, a less volume than the sum of the two original liquids. This contraction is greatest when the mixture is made in the proportion of 52·3 volumes of alcohol and 47·7 volumes of water, the result being, instead of 100 volumes, 96·35. A careful examination of the liquid when it is being agitated reveals a vast number of minute air-bubbles, which are discharged from every point of the mixture. This is due to the fact that gases which are held in solution by the alcohol and water separately are less soluble when the two are brought together. The following table represents the contraction undergone by different mixtures of absolute alcohol and water.

100 Volumes of Mixture at 15° C. (59° F.).

Alcohol	Contraction	Alcohol	Contraction	Alcohol	Contraction
100	0·00	65	3·61	30	2·72
95	1·18	60	3·73	25	2·24
90	1·94	55	3·77	20	1·72
85	2·47	50	3·74	15	1·20
80	2·87	45	3·64	10	0·72
75	3·19	40	3·44	5	0·31
70	3·44	35	3·14		

Alcohol is termed "absolute," when it has been deprived of every trace of water, and when its composition is exactly expressed by its chemical formula. To obtain it in this state, it must be subjected to a series of delicate operations in the laboratory, which it would be impossible to perform on an industrial scale. In commerce, it is known only in a state of greater or less dilution.

ALCOHOL TABLE.

Sp. Gr. at 60° F.	Per cent. of Alcohol by Weight	Per cent. of Alcohol by Volume	Per cent. *under* Proof	Sp. Gr. at 60° F.	Per cent. of Alcohol by Weight	Per cent. of Alcohol by Volume	Per cent. *under* Proof
1·0000	0·00	0·00	100·00	·9750	17·25	21·19	62·87
·9995	0·26	0·33	99·42	·9745	17·67	21·69	62·00
·9990	0·53	0·66	98·84	·9740	18·08	22·18	61·13
·9985	0·79	0·99	98·26	·9735	18·46	22·64	60·32
·9980	1·06	1·34	97·66	·9730	18·85	23·10	59·52
·9975	1·37	1·73	96·97	·9725	19·25	23·58	58·67
·9970	1·69	2·12	96·29	·9720	19·67	24·08	57·80
·9965	2·00	2·51	95·60	·9715	20·08	24·58	56·93
·9960	2·28	2·86	95·00	·9710	20·50	25·07	56·06
·9955	2·56	3·21	94·40	·9705	20·92	25·57	55·20
·9950	2·83	3·55	93·78	·9700	21·31	26·04	54·37
·9945	3·12	3·90	93·16	·9695	21·69	26·49	53·57
·9940	3·41	4·27	92·50	·9690	22·08	26·95	52·77
·9935	3·71	4·63	91·87	·9685	22·46	27·40	51·98
·9930	4·00	5·00	91·23	·9680	22·85	27·86	51·18
·9925	4·31	5·30	90·55	·9675	23·23	28·31	50·38
·9920	4·62	5·78	89·87	·9670	23·62	28·77	49·60
·9915	4·94	6·17	89·20	·9665	24·00	29·22	48·80
·9910	5·25	6·55	88·50	·9660	24·38	29·67	48·00
·9905	5·56	6·94	87·84	·9655	24·77	30·13	47·20
·9900	5·87	7·32	87·16	·9650	25·14	30·57	46·44
·9895	6·21	7·74	86·43	·9645	25·50	30·98	45·70
·9890	6·57	8·18	85·65	·9640	25·86	31·40	44·97
·9885	6·93	8·63	84·88	·9635	26·20	31·80	44·27
·9880	7·27	9·04	84·15	·9630	26·53	32·19	43·60
·9875	7·60	9·45	83·43	·9625	26·87	32·58	42·90
·9870	7·93	9·86	82·70	·9620	27·21	32·98	42·20
·9865	8·29	10·30	81·96	·9615	27·57	33·39	41·47
·9860	8·64	10·73	81·20	·9610	27·93	33·81	40·74
·9855	9·00	11·17	80·42	·9605	28·25	34·18	40·10
·9850	9·36	11·61	79·65	·9600	28·56	34·54	39·47
·9845	9·71	12·05	78·90	·9595	28·87	34·90	38·84
·9840	10·08	12·49	78·10	·9590	29·20	35·28	38·18
·9835	10·46	12·96	77·30	·9585	29·53	35·66	37·50
·9830	10·85	13·43	76·46	·9580	29·87	36·04	36·83
·9825	11·23	13·90	75·64	·9575	30·17	36·39	36·23
·9820	11·62	14·37	74·82	·9570	30·44	36·70	35·68
·9815	12·00	14·84	74·00	·9565	30·72	37·02	35·13
·9810	12·38	15·30	73·18	·9560	31·00	37·34	34·57
·9805	12·77	15·77	72·36	·9555	31·31	37·69	33·95
·9800	13·15	16·24	71·54	·9550	31·62	38·04	33·32
·9795	13·54	16·70	70·73	·9545	31·94	38·40	32·70
·9790	13·92	17·17	69·90	·9540	32·25	38·75	32·08
·9785	14·36	17·70	68·97	·9535	32·56	39·11	31·46
·9780	14·82	18·25	68·00	·9530	32·87	39·47	30·84
·9775	15·25	18·78	67·10	·9525	33·18	39·81	30·24
·9770	15·67	19·28	66·20	·9520	33·47	40·14	29·66
·9765	16·08	19·78	65·34	·9515	33·76	40·47	29·08
·9760	16·40	20·24	64·53	·9510	34·05	40·79	28·52
·9755	16·85	20·71	63·72	·9505	34·29	41·05	28·06

ALCOHOL TABLE—*continued.*

Sp.Gr. at 60° F.	Per cent. of Alcohol by Weight	Per cent. of Alcohol by Volume	Per cent. *under* Proof	Sp. Gr. at 60° F.	Per cent. of Alcohol by Weight	Per cent. of Alcohol by Volume	Per cent. *under* Proof
·9500	34·52	41·32	27·60	·9250	46·91	54·66	4·20
·9495	34·76	41·58	27·13	·9245	47·14	54·90	3·80
·9490	35·00	41·84	26·67	·9240	47·36	55·13	3·38
·9485	35·25	42·12	26·20	·9235	47·59	55·37	2·97
·9480	35·50	42·40	25·70	·9230	47·82	55·60	2·56
·9475	35·75	42·67	25·22	·9225	48·05	55·83	2·15
·9470	36·00	42·95	24·74	·9220	48·27	56·07	1·74
·9465	36·28	43·26	24·20	·9215	48·50	56·30	1·33
·9460	36·56	43·56	23·66	·9210	48·73	56·54	0·92
·9455	36·83	43·87	23·12	·9205	48·96	56·77	0·50
·9450	37·11	44·18	22·58	·9200	49·16	56·98	0·14
·9445	37·39	44·49	22·04	·9198	49·24	57·06	Proof
·9440	37·67	44·79	21·50				Over Proof
·9435	37·94	45·10	20·96	·9195	49·39	57·20	0·25
·9430	38·22	45·41	20·43	·9190	49·64	57·45	0·68
·9425	38·50	45·71	19·89	·9185	49·86	57·69	1·10
·9420	38·78	46·02	19·36	·9180	50·09	57·92	1·51
·9415	39·05	46·32	18·83	·9175	50·30	58·14	1·89
·9410	39·30	46·59	18·36	·9170	50·52	58·36	2·28
·9405	39·55	46·86	17·88	·9165	50·74	58·58	2·66
·9400	39·80	47·13	17·40	·9160	50·96	58·80	3·05
·9395	40·05	47·40	16·93	·9155	51·17	59·01	3·41
·9390	40·30	47·67	16·46	·9150	51·38	59·22	3·78
·9385	40·55	47·94	15·98	·9145	51·58	59·43	4·14
·9380	40·80	48·21	15·50	·9140	51·79	59·63	4·50
·9375	41·05	48·48	15·04	·9135	52·00	59·84	4·87
·9370	41·30	48·75	14·57	·9130	52·23	60·07	5·27
·9365	41·55	49·02	14·10	·9125	52·45	60·30	5·67
·9360	41·80	49·29	13·63	·9120	52·68	60·52	6·07
·9355	42·05	49·55	13·16	·9115	52·91	60·74	6·47
·9350	42·29	49·81	12·70	·9110	53·13	60·97	6·86
·9345	42·52	50·06	12·27	·9105	53·35	61·19	7·23
·9340	42·76	50·31	11·82	·9100	53·57	61·40	7·61
·9335	43·00	50·57	11·38	·9095	53·78	61·62	7·99
·9330	43·24	50·82	10·94	·9090	54·00	61·84	8·36
·9325	43·48	51·07	10·50	·9085	54·24	62·07	8·78
·9320	43·71	51·32	10·05	·9080	54·48	62·31	9·20
·9315	43·95	51·58	9·60	·9075	54·71	62·55	9·62
·9310	44·18	51·82	9·20	·9070	54·95	62·79	10·03
·9305	44·41	52·06	8·77	·9065	55·18	63·02	10·44
·9300	44·64	52·29	8·36	·9060	55·41	63·24	10·84
·9295	44·86	52·53	7·94	·9055	55·64	63·46	11·24
·9290	45·09	52·77	7·52	·9050	55·86	63·69	11·64
·9285	45·32	53·01	7·10	·9045	56·09	63·91	12·03
·9280	45·55	53·24	6·70	·9040	56·32	64·14	12·41
·9275	45·77	53·48	6·27	·9035	56·55	64·36	12·80
·9270	46·00	53·72	5·86	·9030	56·77	64·58	13·18
·9265	46·23	53·95	5·45	·9025	57·00	64·80	13·57
·9260	46·46	54·19	5·03	·9020	57·22	65·01	13·92
·9255	46·68	54·43	4·62	·9015	57·42	65·21	14·27

ALCOHOL TABLE—*continued.*

Sp. Gr. at 60° F.	Per cent. of Alcohol by Weight	Per cent. of Alcohol by Volume	Per cent. *over* Proof	Sp. Gr. at 60° F.	Per cent. of Alcohol by Weight	Per cent. of Alcohol by Volume	Per cent. *over* Proof
·9010	57·63	65·41	14·62	·8760	68·38	75·45	32·23
·9005	57·83	65·61	14·97	·8755	68·58	75·64	32·56
·9000	58·05	65·81	15·33	·8750	68·79	75·83	32·89
·8995	58·27	66·03	15·72	·8745	69·00	76·01	33·21
·8990	58·50	66·25	16·11	·8740	69·21	76·20	33·54
·8985	58·73	66·47	16·49	·8735	69·42	76·39	33·86
·8980	58·95	66·69	16·88	·8730	69·63	76·57	34·19
·8975	59·17	66·90	17·25	·8725	69·83	76·76	34·51
·8970	59·39	67·11	17·61	·8720	70·04	76·94	34·84
·8965	59·61	67·32	17·98	·8715	70·24	77·12	35·14
·8960	59·83	67·53	18·34	·8710	70·44	77·29	35·45
·8955	60·04	67·73	18·70	·8705	70·64	77·46	35·76
·8950	60·26	67·93	19·05	·8700	70·84	77·64	36·07
·8945	60·46	68·13	19·39	·8695	71·04	77·82	36·37
·8940	60·67	68·33	19·74	·8690	71·25	78·00	36·69
·8935	60·88	68·52	20·08	·8685	71·46	78·18	37·01
·8930	61·08	68·72	20·42	·8680	71·67	78·36	37·33
·8925	61·29	68·91	20·77	·8675	71·88	78·55	37·65
·8920	61·50	69·11	21·11	·8670	72·09	78·73	37·98
·8915	61·71	69·30	21·45	·8665	72·30	78·93	38·32
·8910	61·92	69·50	21·79	·8660	72·52	79·12	38·65
·8905	62·14	69·71	22·16	·8655	72·74	79·31	38·99
·8900	62·36	69·92	22·53	·8650	72·96	79·50	39·32
·8895	62·59	70·14	22·91	·8645	73·17	79·68	39·64
·8890	62·82	70·35	23·29	·8640	73·38	79·86	39·96
·8885	63·04	70·57	23·66	·8635	73·58	80·04	40·27
·8880	63·26	70·77	24·02	·8630	73·79	80·22	40·60
·8875	63·48	70·97	24·37	·8625	74·00	80·40	40·91
·8870	63·70	71·17	24·73	·8620	74·23	80·60	41·26
·8865	63·91	71·38	25·09	·8615	74·45	80·80	41·61
·8860	64·13	71·58	25·44	·8610	74·68	81·00	41·96
·8855	64·35	71·78	25·79	·8605	74·91	81·20	42·31
·8850	64·57	71·98	26·15	·8600	75·14	81·40	42·66
·8845	64·78	72·18	26·50	·8595	75·36	81·60	43·00
·8840	65·00	72·38	26·85	·8590	75·59	81·80	43·35
·8835	65·21	72·58	27·19	·8585	75·82	82·00	43·70
·8830	65·42	72·77	27·52	·8580	76·04	82·19	44·04
·8825	65·63	72·96	27·85	·8575	76·25	82·37	44·35
·8820	65·83	73·15	28·19	·8570	76·46	82·54	44·66
·8815	66·04	73·34	28·52	·8565	76·67	82·72	44·97
·8810	66·26	73·54	28·87	·8560	76·88	82·90	45·28
·8805	66·48	73·73	29·22	·8555	77·08	83·07	45·60
·8800	66·70	73·93	29·57	·8550	77·29	83·25	45·90
·8795	67·91	74·13	29·92	·8545	77·50	83·43	46·20
·8790	67·13	74·33	30·26	·8540	77·71	83·60	46·51
·8785	67·33	74·52	30·59	·8535	77·92	83·78	46·82
·8780	67·54	74·70	30·92	·8530	78·12	83·94	47·11
·8775	67·75	74·89	31·25	·8525	78·32	84·11	47·40
·8770	67·96	75·08	31·58	·8520	78·52	84·27	47·70
·8765	68·17	75·27	31·90	·8515	78·72	84·44	47·98

ALCOHOL TABLE—*continued.*

Sp. Gr. at 60° F.	Per cent. of Alcohol by Weight	Per cent. of Alcohol by Volume	Per cent. *over* Proof	Sp. Gr. at 60° F.	Per cent. of Alcohol by Weight	Per cent. of Alcohol by Volume	Per cent. *over* Proof
·8510	78·92	84·60	48·27	·8260	88·76	92·36	61·86
·8505	79·12	84·77	48·56	·8255	88·96	92·51	62·12
·8500	79·32	84·93	48·84	·8250	89·16	92·66	62·38
·8495	79·52	85·10	49·13	·8245	89·35	92·80	62·63
·8490	79·72	85·26	49·38	·8240	89·54	92·94	62·88
·8485	79·92	85·42	49·67	·8235	89·73	93·09	63·13
·8480	80·13	85·59	50·00	·8230	89·92	93·23	63·38
·8475	80·33	85·77	50·31	·8225	90·11	93·36	63·62
·8470	80·54	85·94	50·61	·8220	90·29	93·49	63·84
·8465	80·75	86·11	50·91	·8215	90·46	93·62	64·06
·8460	80·96	86·28	51·21	·8210	90·64	93·75	64·30
·8455	81·16	86·45	51·50	·8205	90·82	93·87	64·51
·8450	81·36	86·61	51·78	·8200	91·00	94·00	64·74
·8445	81·56	86·77	52·06	·8195	91·18	94·13	64·96
·8440	81·76	86·93	52·34	·8190	91·36	94·26	65·18
·8435	81·96	87·09	52·62	·8185	91·54	94·38	65·40
·8430	82·15	87·24	52·90	·8180	91·71	94·51	65·62
·8425	82·35	87·40	53·16	·8175	91·89	94·64	65·85
·8420	82·54	87·55	53·43	·8170	92·07	94·76	66·07
·8415	82·73	87·70	53·70	·8165	92·26	94·90	66·30
·8410	82·92	87·85	53·96	·8160	92·44	95·03	66·53
·8405	83·12	88·00	54·23	·8155	92·63	95·16	66·76
·8400	83·31	88·16	54·50	·8150	92·81	95·29	67·00
·8395	83·50	88·31	54·75	·8145	93·00	95·42	67·23
·8390	83·69	88·46	55·02	·8140	93·18	95·55	67·46
·8385	83·88	88·61	55·28	·8135	93·37	95·69	67·70
·8380	84·08	88·76	55·55	·8130	93·55	95·82	67·92
·8375	84·28	88·92	55·83	·8125	93·74	95·95	68·15
·8370	84·48	89·08	56·10	·8120	93·92	96·08	68·38
·8365	84·68	89·24	56·38	·8115	94·10	96·20	68·60
·8360	84·88	89·39	56·66	·8110	94·28	96·32	68·80
·8355	85·08	89·55	56·93	·8105	94·45	96·43	69·00
·8350	85·27	89·70	57·20	·8100	94·62	96·55	69·20
·8345	85·46	89·84	57·45	·8095	94·80	96·67	69·40
·8340	85·65	89·99	57·71	·8090	94·97	96·78	69·61
·8335	85·85	90·14	57·97	·8085	95·14	96·90	69·82
·8330	86·04	90·29	58·23	·8080	95·32	97·02	70·03
·8325	86·23	90·43	58·48	·8075	95·50	97·15	70·25
·8320	86·42	90·58	58·74	·8070	95·68	97·27	70·46
·8315	86·62	90·73	59·00	·8065	95·86	97·39	70·67
·8310	86·88	90·88	59·26	·8060	96·03	97·51	70·88
·8305	87·00	91·02	59·51	·8055	96·20	97·62	71·07
·8300	87·19	91·17	59·77	·8050	96·37	97·73	71·26
·8295	87·38	91·31	60·02	·8045	96·53	97·83	71·45
·8290	87·58	91·46	60·28	·8040	96·70	97·94	71·64
·8285	87·77	91·60	60·53	·8035	96·87	98·05	71·83
·8280	87·96	91·75	60·79	·8030	97·03	98·16	72·02
·8275	88·16	91·90	61·05	·8025	97·20	98·27	72·20
·8270	88·36	92·05	61·32	·8020	97·37	98·37	72·40
·8265	88·56	92·21	61·60	·8015	97·53	98·48	72·58

ALCOHOL TABLE—*continued.*

Sp. Gr. at 60° F.	Per cent. of Alcohol by Weight	Per cent. of Alcohol by Volume	Per cent. *over* Proof	Sp. Gr. at 60° F.	Per cent. of Alcohol by Weight	Per cent. of Alcohol by Volume	Per cent. *over* Proof
·8010	97·70	98·59	72·77	·7970	98·97	99·35	74·14
·8005	97·87	98·69	72·95	·7965	99·13	99·45	74·31
·8000	98·03	98·80	73·14	·7960	99·29	99·55	74·50
·7995	98·19	98·89	73·30	·7955	99·45	99·65	74·66
·7990	98·34	98·98	73·47	·7950	99·61	99·75	74·83
·7985	98·50	99·07	73·64	·7945	99·78	99·86	75·01
·7980	98·66	99·16	73·81	·7940	99·94	99·96	75·18
·7975	98·81	99·26	73·97	·7938	Absolute	Alcohol	75·25

Alcohol possesses the power of dissolving a large number of substances insoluble in water and acids, such as many inorganic salts, phosphorus, sulphur, iodine, resins, essential oils, fats, colouring matters, etc. It precipitates albumen, gelatine, starch, gum, and other substances from their solutions. These properties render it an invaluable agent in the hands of the chemist.

Alcohol may be obtained from all substances which contain sugar. It does not exist in these in the natural state, but is the product of the decomposition by fermentation of the saccharine principle contained therein; this decomposition yields the spirit in a dilute state, but it is readily separated from the water with which it is mixed by processes of distillation, which will subsequently be described. The amount of alcohol which may be obtained from the different unfermented substances which yield it after fermentation, varies considerably, depending entirely upon the quantity of sugar which they contain. Theoretically 1 part of pure glucose (invert sugar) produced from ·95 part of cane sugar produces ·511 part of alcohol and ·489 part of carbonic acid gas, but variable quantities of other bodies are always formed.

FERMENTATION.—Fermentation is the change undergone, under certain conditions, by any animal or vegetable substance under the influence of ferments, by which are produced other substances not originally found in it. There are several kinds

of fermentation, the most important being that by which alcohol is formed from glucose, or *alcoholic* fermentation. If this process be not carefully conducted, other fermentations ensue, resulting in the formation of acetic, lactic, and butyric acids, and sometimes of saccharine and viscous matters, which are productive of much annoyance to the distiller. These may be called the accidents of fermentation, and must be very carefully guarded against.

Glucose is said, therefore, to be subject to four principal kinds of fermentation—alcoholic, acetous, lactic, and viscous. There are others of a less important nature to which glucose is liable, but only the above four will be examined here.

The real nature of the process of fermentation, though it has been made the subject of much investigation, is still shrouded in a good deal of obscurity. Many theories have been put forward to account for it, of which the most probable is that of Pasteur, who tells us that the action of ferments is due to the life and growth of the minute cells of which they are composed. To effect this development, the cells require mineral food; and if this be withheld, no fermentation can take place. Pasteur has shown this by placing a small quantity of brewers' yeast, the ferment commonly employed in industrial operations, in an absolutely pure solution of sugar. He observed no sign of fermentation until he had introduced a soluble phosphate and a salt of ammonia, salts which constitute the mineral components of the ferment. The presence of albuminoid matters appears also to be indispensable; but these are contained in the ferment itself, so that in case the liquor is not sufficiently provided with such matter, the ferment will, so to speak, nourish itself with its own substance, throwing off at the same time the useless particles that are not necessary for its own growth. The results of careful microscopical examinations of the minute cellules of which yeast is composed fully bear out Pasteur's view of the subject.

The different varieties of fermentation to which glucose is liable will here be treated of separately.

Alcoholic Fermentation.—Five agents, each acting in a different direction, are necessary to produce this; in the absence of any one of them, fermentation cannot proceed. They are (1) Sugar, (2) Water, (3) A ferment, (4) Heat, and (5) Air. The part played by each of these five indispensable agents will now be examined.

Sugar.—Sugar when dissolved and brought into contact with a ferment is decomposed, yielding alcohol and carbonic anhydride. Before fermentation, the sugar has to be converted into glucose (invert sugar), by the combination with one molecule of water, and the subsequent splitting up of the sugar molecule into dextrose and laevulose. This so-called hydrolysis is very easily effected; simple heating of a saccharine solution is sometimes sufficient, especially in the presence of dilute acid; the presence of ferments themselves produces it. It is this ready conversion of sugar into glucose that renders saccharine matters so useful in the production of alcohol. The best proportion of sugar in an unfermented liquor or "must" is about 12 per cent. More than this hinders the fermentation.

Water.—The proportion of water employed in dissolving the glucose exercises considerable influence upon the products of the fermentation, as well as upon the time occupied by the process. The operation may be hurried or kept back by adding or subtracting water; the latter is effected by evaporation. The relative amount of water present is ascertained by means of a saccharometer. The water employed should contain no organic matter, and only a small proportion of mineral salts; it should always be clear and bright.

The Ferment.—A ferment takes no part in the formation of the products of fermentation, but only acts as the stimulant which provokes the change without participating therein chemically.

Brewers' yeast is the ferment chiefly employed by dis-

tillers. It is a frothy substance formed during the fermentation of the worts of beer. It collects on the surface, and is skimmed off and rendered dry and solid by the action of a press. That obtained from a strong beer is much to be preferred, as it is more certain in its action and less liable to engender acetous fermentation. It is best when newly prepared: old yeast should never be used when fresh can be obtained.

The proportions of yeast and sugar for quick fermentation are 5 parts of sugar to 1 part of yeast, although the same quantity of yeast will ferment a much larger quantity of sugar.

Heat.—Heat is as necessary to fermentation as water, and like water, may be the cause of hastening or checking the process. The lowest temperature at which the action is sustained is about 15° C. (59° F.), and it becomes more energetic and perfect as the temperature is increased up to 28° or 30° C. (82° to 86° F.). A higher temperature than this should be avoided, as likely to favour acid fermentation. As a means of cooling the contents of the vat rapidly, in case of necessity, a coil of pipe through which cold water circulates is placed in the vat.

Air.—Air though indispensable at the beginning of the process, becomes useless, and indeed injurious, during its continuation. It is essentially the initial force, but when once the impulse has been given, it is no longer necessary. Therefore air should be excluded as carefully as possible, by keeping the vat covered and allowing no movement to displace the layer of carbonic anhydride, resting on the surface of the liquor, because contact with the air is certain to produce an acid fermentation; this is especially liable to occur towards the end of the operation.

The whole process of alcoholic fermentation may be briefly described as follows:—

The liquor in the vat having been heated to the right tem-

perature, the ferment, previously mixed with a small quantity of the saccharine liquor and then left to stand until fermentation begins, is thrown in, and the whole is well stirred together. In about three hours' time, the commencement of the fermentation is announced by small bubbles of gas, which appear on the surface of the vat, and collect round the edges. As these increase in number, the whole contents are gradually thrown into a state of motion, resembling ebullition, by the tumultuous disengagement of carbonic anhydride. The liquor rises in temperature and becomes covered with froth. Care must now be taken to prevent the temperature from rising too high, and also to prevent the action from becoming too energetic, thereby causing the contents of the vat to overflow. In about 24 hours, the action begins to subside, and the temperature falls to that of the surrounding atmosphere. An hour or two later, the process is complete; the bubbles disappear, and the liquor now possesses the characteristic taste and odour of alcohol. The whole operation, as here described, usually occupies about 48 hours, more or less. The duration of the process is influenced, of course, by many circumstances, chiefly by the bulk of the liquor, its richness in sugar, the quality of the ferment, and the temperature and general state of the atmosphere. Alkalinity checks it, also 10 per cent. or more of alcohol. The temperature should be reduced to about 84° F. to start fermentation, but in cold weather it should be 2 or 3 degrees higher and in hot weather 2 or 3 degrees colder. One gallon of molasses will make about 5 gallons of mash containing about 12 per cent. sugar. In the United States, where the excise regulations limit the time of the whole operation of mixing, fermenting and distilling to 72 hours, it is necessary in order to hasten the operation, to invert the saccharose by heating the mash with sulphuric acid. When a fermentation has taken place properly and completely, the mash is said to be well attenuated. This attenuation is the difference between the specific gravity of the mash before and after fermentation.

The operations in the fermentation room vary in different countries, and are also subject to excise regulation. The result is that the fermentation of beet and cane molasses must differ in different countries, caused not only by differences in the qualities of the molasses, in climate and cost of materials, but often due to differences in excise regulation. The usual method of setting up a mash is to pass the necessary molasses, say 1500 gallons to 5000 gallons into a vessel provided with a stirrer and to add about half the necessary water for dilution, then heat to about 150° F. and blow air through; when well mixed test to see that it just turns blue litmus paper pink, then add for every 100 gallons molasses ½ to 1 lb. phosphate of ammonium and ¼ oz. ammonium fluoride.

Acetous Fermentation.—This perplexing occurrence cannot be too carefully guarded against. It results, as mentioned above, when the fermenting liquor is exposed to the air. When this is the case, the liquor absorbs a portion of the oxygen, which unites with the alcohol, thus converting it into acetic acid as rapidly as it is formed. When acetous fermentation begins, the liquor becomes turbid, and a long stringy substance appears which after a time, settles down to the bottom of the vat. It is then found that alcohol has been decomposed, and that an equivalent quantity of acetic acid remains instead. It has been discovered that the presence of another ferment and a temperature of 20° to 35°C. (68° to 95° F.) are indispensable to acetous fermentation, as well as contact with the atmosphere. Hence, in order to prevent its occurrence, it is necessary not only to exclude the air, but also to guard against too high a temperature. The latter invariably tends to excite acetous fermentation. It should also be remarked that it is well to cleanse the vats and utensils carefully with lime-water before using, in order to destroy foreign or injurious ferments which they may contain. A variety of other circumstances are favourable to acetification, such as the use of a stagnant or impure water.

Lactic Fermentation.—Under the influence of lactic fermentation, sugar is converted into lactic acid. When it has once begun, it develops rapidly, and soon decomposes a large quantity of glucose, causing a bad odour and taste; but as it can proceed only in a neutral liquor, the presence of the acid itself speedily checks its own formation. Then, however, another ferment is liable to act upon the lactic acid already formed, converting it into butyric acid, which is easily recognised by its odour of rancid butter. Carbonic anhydride and hydrogen are evolved by this reaction. The latter gas in its nascent condition acts powerfully upon glucose, converting it into mannite, so that lactic fermentation—in itself an intolerable nuisance—becomes the source of a new and equally objectionable waste of sugar. It can be avoided only by keeping the vats thoroughly clean; they should be washed with water acidulated with 5 per cent. of sulphuric acid. The best preventives are thorough cleanliness, and the use of good fresh yeast in the correct proportion.

Viscous Fermentation.—This is usually the result of allowing the vats to stand too long before fermentation begins. It is characterised by the formation of viscous or mucilaginous matters, which render the liquor turbid, and by the evolution of carbonic anhydride and hydrogen gases, the latter acting as in the case of lactic fermentation, and converting the glucose into mannite. Viscous fermentation may generally be attributed to the too feeble action of the ferment. It occurs principally in the fermentation of white wine, beer, and beet-juice, or of other liquors containing much nitrogenous matter. It may be avoided by the same precautions as are indicated for the prevention of lactic fermentation.

Putrid Fermentation.—This fermentation takes place generally after all other fermentations have ceased, and when much albuminous matter is present. Ammonia is produced, which unites with the acetic acid previously formed. The odour is very disagreeable. Sugar liquors are very liable to start fer-

menting apparently spontaneously, especially when in a dilute state and only moderately warm. As germs of the various ferments are invariably present in the air at all times, it is necessary for the manufacturer to prevent as far as possible such conditions as will conduce to their multiplication in his factory. Warm damp atmosphere, want of cleanliness and ventilation are great factors in the multiplication of germs of all kinds. When starting operations care should be taken to thoroughly cleanse, tanks, walls, etc., with disinfectants, such as formaline, but fresh lime-wash is effective and easily applied. Many of the various kinds of ferments and bacteria are present in molasses, but by making the conditions specially suitable for the growth of any special one the others remain to a large extent dormant.

Apparatus.—It remains now to describe briefly the vessels or vats employed in the process of fermentation. They are made of oak or pine, firmly bound together with iron bands, and they should be somewhat deeper than wide, and slightly conical. Their dimensions vary, of course, with the nature and quantity of the liquor to be fermented. Circular vats are preferable to square ones.

The room in which the vats are placed should be made as free from draughts as possible, by dispensing with superfluous doors and windows; it should not be too high, and should be enclosed by thick walls in order to maintain a uniform temperature. As uniformity of temperature is highly desirable, a thermometer should be kept in the room, and means provided for supplying heat in case it be required. Every precaution must be taken to ensure the most absolute cleanliness; the floors should be washed with water daily, and the vats, as pointed out above, must be cleaned out as soon as the contents are removed. For washing the vats, lime-water should be used when the fermentation has been too energetic, or has shown a tendency to become acid. Care must be taken to get rid of carbonic anhydride formed during the operation. The

best way of getting rid of it is to have a number of holes, 3 or 4 inches square, in the floor, or in the walls near the floor, through which the gas escapes by reason of its weight. The dangerous action of this gas, and its effects upon animal life, when unmixed with air, are too well known to necessitate any further enforcement of these precautions.

DISTILLATION.—The fermented liquors obtained in the manner described above, are composed essentially of volatile substances, such as water, alcohol, essential oils, and a little acetic acid, and of non-volatile substances, such as cellulose unaltered sugar, mineral matters, lactic acid, mannite, etc.

The volatile constituents of the liquor possess widely different degrees of volatility, as shown in the table of boiling-points given below.

BOILING-POINTS AND QUALITIES OF IMPURITIES USUALLY FOUND IN ALCOHOL, MADE FROM SUGAR OR ITS PRODUCTS.

		Boiling-Point °F.	
Amyl alcohols (fusel oils) ..		266	Taste and smell unpleasant
Formaldehyde		70	Pungent-smelling gas
Furfural		325	Taste and smell like cinnamon
Methyl alcohol		145	Odour of methylated spirit
Acetic acid	Fatty acids	246	Vinegar odour and taste
Formic ,,	Fatty acids	215	Pungent irritating odour and sour taste
Butyric ,,	Fatty acids	315	Odour of rancid butter
Capric ,,	Fatty acids	380	
Ethyl acetate		169	Fruity odour
,, formate		129	Odour of peach kernels
,, butyrate		241	Odour of pine-apples
,, caprate		322	
Water		212	
Alcohol (ethylic)		173	Spirits of wine

It will thus be seen that the separation of the volatile and non-volatile constituents by evaporation and condensation of the vapours given off is very easily effected, and that also by the same process, which is termed "distillation," the volatile substances may be separated from one another. As the acetic acid and essential oils are present only in very small quantities, they will not require much consideration. The aim of the process is to separate as completely as possible the alcohol

from the water which dilutes it. At p. 730 was given a table showing the amount of alcohol contained in the vapours given off from alcoholic liquids of different strengths, and also their boiling-points. A glance at this table will show to what an extent an alcoholic liquor may be strengthened by distillation, and how the quantity of spirit in the distillate increases in proportion as that contained in the original liquor diminishes. It will also be seen that successive distillations of spirituous liquors will ultimately yield a spirit of very high strength. As an example, suppose that a liquid containing 5 per cent. of alcohol is to be distilled. Its vapour condensed gives a distillate containing 45 per cent. of alcohol, which, if re-distilled, affords another containing 82 per cent. This, subjected again to distillation, yields alcohol of over 90 per cent. in strength. Thus three successive distillations have strengthened the liquor from 5 per cent. to 90 per cent. This, of course, is speaking theoretically; in practice, it is possible to obtain results so absolutely perfect, only by leaving behind a considerable quantity of spirit in the distilling apparatus after each distillation.

It will thus be clear that the richness in alcohol of the vapours given off from boiling alcoholic liquids is not a constant quantity, but that it necessarily diminishes as the ebullition is continued. For example, a liquor containing 7 per cent. of alcohol yields, on boiling, a vapour containing 50 per cent. (see table, p. 730). The first portion of the distillate will, therefore, be of this strength. But as the vapour is proportionately richer in alcohol, the boiling liquor must become gradually weaker, and, in consequence, must yield weaker vapours. Thus, when the proportion of alcohol in the boiling liquid has sunk to 5 per cent., the vapours condensed at that time will contain only 40 per cent.; at 2 per cent. of alcohol in the liquor, the vapours yield only 28 per cent.; and at 1 per cent., they will be found when condensed to contain only 13 per cent. From this it will be understood that if the

distillation be stopped at any given point before the complete volatilisation of all the alcohol, the distillate obtained will be considerably stronger than if the process had been carried on to the end. Moreover, another advantage derived from checking the process before the end, and keeping the last portions of the distillate separate from the rest, besides that of obtaining a stronger spirit, is that a much purer one is produced. The volatile essential oils, fatty acids, etc., mentioned above, are soluble only in strong alcohol, and insoluble in its aqueous solutions. They distil also at a much higher temperature than alcohol, and so are found chiefly among the last products of the distillation, which result from raising the temperature of the boiling liquid. Also by collecting the first portions that are distilled over in a separate vessel, the impurities that have a lower boiling-point than alcohol are partially removed, such as formaldehyde and methyl alcohol, but in all cases these impurities are not entirely separated in one distillation, and to remove them thoroughly several distillations have to be made. This is the basis of the Coffey and similar stills, but care must be taken not to remove too much of the esters, or the spirit will be flavourless as compared with spirit made by the old pot still. Fortunately, the boiling-points of alcohol and ethyl acetate are very nearly the same, so the flavour of the latter is retained. In the continuous form of still, the formaldehyde and methyl alcohol are found in the cold feints, or low wines, and the volatile gases escape. The fatty acids and water are found in the hot feints. The system of checking the distillation and removing the products at different points is frequently employed in the practice of rectification.

The apparatus employed in the process of distillation is called a "still," and is of almost infinite variety. The very simplest form is shown in Fig. 220, and consists of two essential parts, the still or boiler A, which is made of tinned copper, and enters the furnace, and the cooler or warmer B,

a pipe of block-tin or tinned copper, bent into a spiral and connected with the top of the still. The liquid is boiled in the still, and the vapours passing over are condensed in the pipe, which is placed in a tub or vessel C containing cold water. This apparatus is not much employed in distilling, as it is impossible to get sufficiently pure products from it on a commercial scale. In an arrangement of this kind, the vapours of alcohol and water are condensed together. But if, instead of filling the cooler with cold water, it be kept at a temperature of 80° C. (176° F.), the greater part of the water will be

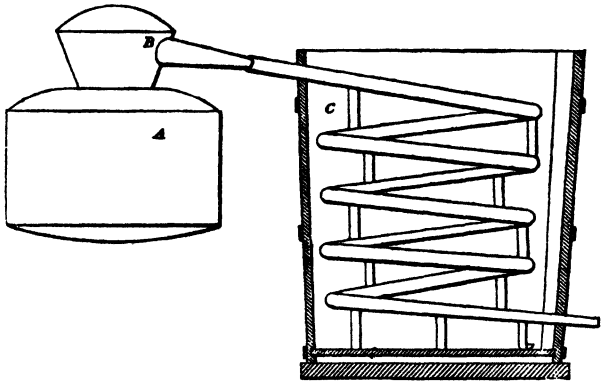

FIG. 220.—SIMPLE STILL.

condensed; while the alcohol, boiling at 78° C. (172° F.), passes through the coil uncondensed. If, therefore, the water be condensed and collected separately in this manner, and the alcoholic vapours be conducted into another cooler, kept at a temperature below 78° C. (172° F.), the alcohol will be obtained, in a much higher state of concentration than it would be by a process of simple distillation. Supposing, again, that vapours containing but a small quantity of alcohol are brought into contact with an alcoholic liquid of lower temperature than the vapours themselves, and in very small quantity, the vapour of water will be partly condensed, so that the remainder will

be richer in alcohol than it was previously. But the water, in condensing, converts into vapour a portion of the spirit contained in the liquid interposed, so that the uncondensed vapours passing away are still further enriched by this means. Here, then, are the results obtained: the alcoholic vapours are strengthened, firstly, by the removal of a portion of the water wherewith they were mixed; and then by the admixture with them of the vaporised spirit placed in the condenser. By the employment of some such method as this, a very satisfactory yield of spirit may be obtained, both with regard to quality,

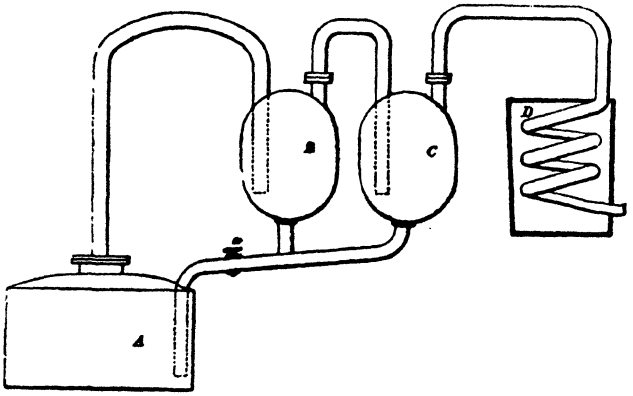

FIG. 221.—ADAM'S STILL.

as it is extremely concentrated, and to the cost of production, since the simple condensation of the water is made use of to convert the spirit into vapour without the necessity of having recourse to fuel. The construction of every variety of distilling apparatus now in use is based upon the above principles.

The first distilling apparatus for the production of strong alcohol on an industrial scale was invented by Edward Adam, in the year 1801. The arrangement is shown in Fig. 221 in which A is a still to contain the liquor. The vapours are conducted by a tube into the egg-shaped vessel B, the tube reaching nearly to the bottom; they then pass out by another

tube into a second egg C; then, in some cases, into a third, not shown in the figure, and finally into the worm D. The liquor condensed in the first egg is stronger than that in the still, while that found in the second and third is stronger than either. The spirit which is condensed at the bottom of the worm is of a very high degree of strength. At the bottom of each of the eggs is a tube connected with the still, by which the concentrated liquors can be run back into it. In the tube is a stop-cock, *a*, by regulating which, enough liquor can be kept in the eggs to cover the lower ends of the entrance pipes; so that the alcoholic vapours are not only deprived of water by the cooling which they undergo in passing through the eggs, but are also mixed with fresh spirit obtained from the vaporisation of the liquid remaining in the bottom of the eggs, in the manner already described.

Adam's arrangement fulfilled, therefore, the two conditions necessary for the production of strong spirit inexpensively; but unfortunately it had also serious defects. The temperature of the egg could not be maintained at a constant standard, and the bubbling of the vapours through the liquor inside created too high a pressure. It was, however, a source of great profit to its inventor for a long period, although it gave rise to many imitations and improvements of greater or less merit. Among these are the stills of Solimani and Berard, which more nearly resemble those of the present day.

Utilising the experience which had been gained by Adam, Solimani, and Berard, and avoiding the defects which these stills presented, Cellier-Blumenthal devised an apparatus which has become the basis of all subsequent improvements; indeed, every successive invention has differed from this arrangement merely in detail, the general principles being in every case the same. The chief defect in the three stills above mentioned was that they were intermittent, while that of Cellier-Blumenthal is continuous; that is to say, the liquid for distillation is introduced at one end of the arrangement,

and the alcoholic products are received continuously, and of a constant degree of concentration, at the other.

The saving of time and fuel resulting from the use of this still is enormous. In the case of the previous stills, the fuel consumed amounted to a weight nearly three times that of the spirit yielded by it; whereas, the Cellier-Blumenthal apparatus reduces the amount to one-quarter of the weight of alcohol produced.

Of the many forms of continuous still, Chapman's improved Coffey Still (Fig. 222, Plate XII.) may be taken as an example. This still consists of an analyser, and of a rectifier, both built of wooden frames, with perforated copper sheets between the frames. The fittings comprise safety valves, guards, overflow pipes, traps, patent fall valves, etc.; a wrought steel well and condenser; a spirit and feints refrigerator and spirit safe; besides the piping and connections between the still and the pumps.

The action of this still is very simple as well as efficient and economical, and it is said to require 34 per cent. less fuel and 50 per cent. less labour per 100 gallons of rum run than that of a pot still.

The wash, properly set up and fermented, is run in a constant and steady stream through the series of pipes in the rectifying column. Here it absorbs heat from the vapours arising from the hot low wines coming over from the analyser into the bottom of the rectifier, and it is thus delivered in a hot state on the top diaphragm of the analyser.

The diaphragms in the analysing column are arranged in such sort that the wash passes over them in a thin stream, overflowing the weirs, formed at alternate ends, by the downcast pipes; and thus it goes zigzagging, backwards and forwards, until it finally reaches the bottom chamber. In this, steam admitted to it by a large perforated steam pipe makes it boil up. The vapour from the wash rises, and passes up through the numerous small holes provided in the diaphragms,

VED COFFEY STILL.

IT.

FAWCETT PRESTON & Co, Ltd

Engineers,

LIVERPOOL.

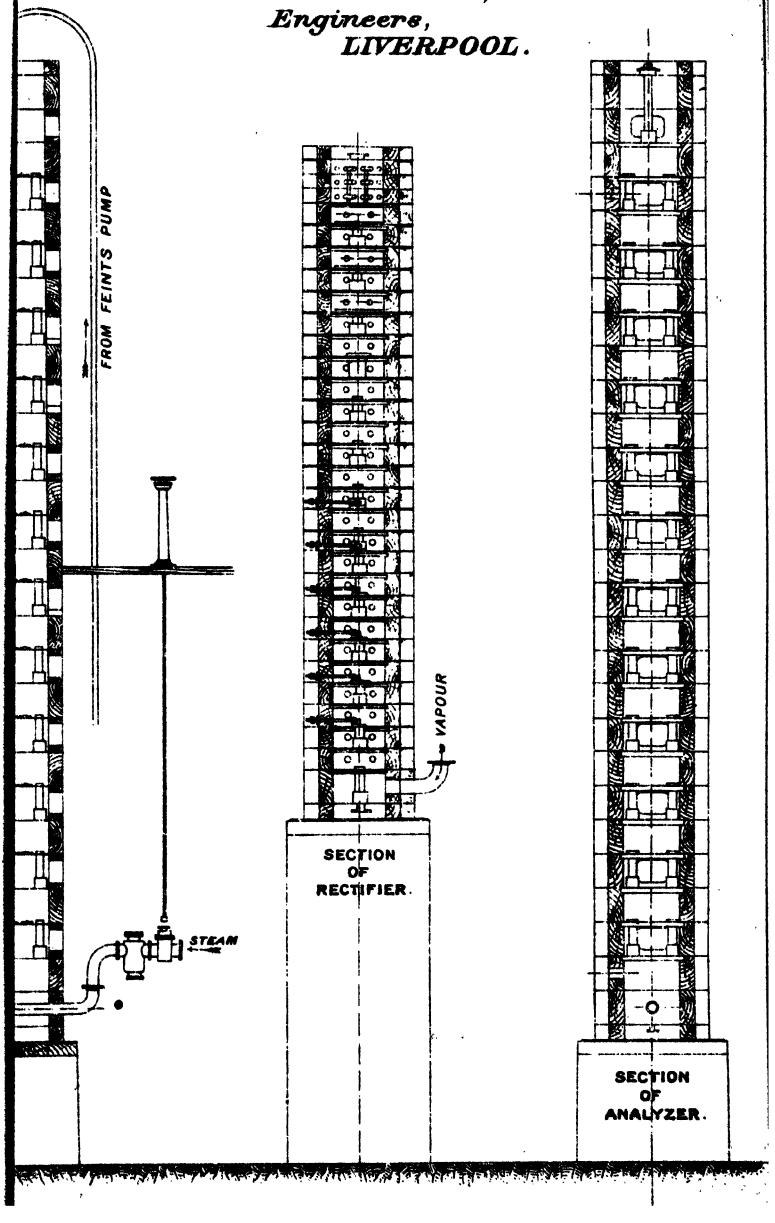

and not only causes the liquor on these latter to boil, but also disentangles the spirit from the water in the wash by piercing it in innumerable points. Thus the spirit gradually creeps up to the top of the column, while the spent wash, falling to the bottom with less and less spirit, eventually runs to waste out of the still by an inverted syphon. A portion of this waste liquor, called "Dunder" in Jamaica, is sometimes used to promote fermentation in the fermenting vats.

The spirituous vapour accumulates at the top of the analyser, and is carried down to the bottom of the rectifier. It then passes upwards through a series of diaphragms, and meets on its way a portion of the series of the spirit cooling and wash heating pipes. Thus is effected a further disentangling of the spirit from the water vapour from which it has come over from the analyser, until it arrives at the top of the rectifier. Here the cold entering wash, and in addition, cold water circulating through a special series of small pipes, complete the final condensation of the spirit, which falls on a collecting plate or diaphragm, and so out to the cooling worm in the refrigerator. If the spirit, when tested, is too strong, a little more wash is admitted to the still; if it is running too weak, the feed of wash is curtailed by the attendant; but, given a steady supply of wash, the still will run for hours together without variation.

The proportion of the low wines that cannot find its way up to the spirit collecting diaphragm, but falls to the bottom of the rectifier, flows out therefrom into a cooler surrounded by water, and thence to the so-called hot feints vat. From this it is pumped up to the top of the analyser, and, mixing with the descending heated wash, it loses its remaining spirit, and the residue passes away with the wash or dunder.

The ethereal gases and vapours, not condensed in the rectifier, pass over from the head of the rectifier; the gases, by an escape pipe to the atmosphere; the vapours, to the cooling worm in the refrigerator. In this they are condensed,

and then flow to the cold feints vat. From this vat they are drawn off from time to time, as required, and are fed into the still, mixed with the wash.

The spirit falling on the collecting plate or diaphragm, as described above, flows to the cooling worm in the refrigerator. Round this worm a current of cooling water is maintained in order to thoroughly cool the spirit before it finally passes away from the still to the spirit safe and spirit vats.

A testing apparatus with its refrigerator is fitted to the still to enable the man in charge to ascertain, at any moment, the proportion (*a*) of the spirit in the vapour from the spent wash or dunder, in the analyser, (*b*) of the feints passing from the top of the analyser to the bottom of the rectifier, (*c*) of the spirit running from the collecting plate to the cooling worm.

Thermometers are also fitted to the wash heating pipes in the rectifier, by which the attendant can ascertain the temperature of the wash at various levels; although as a matter of fact, a man, accustomed to work these stills, can soon tell, by touching the pipes, if the difference in the temperatures is right or not; and he can then take such steps as may be necessary in adjusting the admission of steam and the rate of feed of wash

The pumping engine supplied with these stills is of the beam type, with vertical gun-metal pumps, in duplicate, for wash and feints, and a large vertical bucket and plunger pump for circulating water.

This engine is sometimes arranged to drive the rotating arms of a mixer in which the molasses and water forming the wash are mixed before entering the fermenting vats.

Mixing is sometimes produced by compressed air being admitted into the mixing tank, and sometimes by a Körting blower. Whichever system is adopted, the wash should be mixed quickly and effectively, to ensure good fermentation.

From this and similar continuous stills, alcohol or silent

spirit at various strengths can be run at will. This result is brought about by a simple device by which one or more of the diaphragms in the analysing column may be thrown out of work, thus producing "low wines" of proportionately less strength than when all the analysing diaphragms are worked, and these low wines rectified in the rectifying column, yield spirit of less strength than stronger low wines would yield, and a good rum can be produced at 44° O.P., provided the wash from which it is distilled is properly set up with good materials at 1·060 S.G. and attenuated to 1·005–1·015.

Steam Required.—With a continuous still giving say 100 gallons of spirit per hour, it will be necessary to evaporate 260 gallons of water per hour. If the boiler pressure is 10 lb., then 225 square feet of heating surface will be required. If the pressure is 21 lb., then 112 square feet; if 52 lb., then 56 square feet will suffice.

Closed steam in coil is preferable to open steam.

Open steam often gives rise to objectionable odours.

The bad odours are due to foul waters used in the boilers, or to the condensed water going back to the boilers containing oil derived from the pistons, etc.

Rum may be described as an alcoholic spirit obtained from the fermentation of the products of the sugar cane.

The molasses vary in quality according to how far the extraction of the crystallisable sugar has been carried. A low molasses will contain about 50 per cent. saccharine matter, 20 per cent. organic matter containing albumen, 10 per cent. of inorganic salts of which about half are potash salts. It is thus a substance rich in matters favourable to fermentation, especially as the saccharine matter consists of a large proportion of inverted sugar.

If sulphur fumes or sulphites have been used to bleach the sugar, some sulphites may be still left in the molasses, and this will retard fermentation. To avoid this, air should be blown through the wash to oxidise these to sulphates.

Where the lime and carbonatation process is used in cane factories, the lime has destroyed most of the glucose sugar, and the molasses are generally alkaline; this alkalinity must be neutralised before commencing fermentation, by adding about 10 to 20 lb. of concentrated sulphuric acid previously diluted with 10 gallons of water to every 100 gallons of molasses. The mash should turn a blue litmus paper pink.

Phosphoric acid may be used instead of sulphuric acid with advantage to the subsequent fermentation. The addition of ammonium, sodium, or potassium fluoride has been found to purify the yeast from bacteria.

The slightly acid molasses should be diluted to about 1·060 specific gravity and cooled, when it will soon start fermenting. This is greatly facilitated by the addition of brewers' yeast, but the true rum yeast is slightly different in form, and probably in products, from this.

In Jamaica high quality molasses are used, and these are mixed with the skimmings and "dunder" and sometimes cane juice and thin sweet washings.

"Skimmings" comprise the matters separated from the cane juice during the processes of defecation and evaporation in open pans, and the thin sweet washings or "liquor" results from the water employed in washing the various boiling pans, etc., in the factory; these are mixed, and soon fermentation commences; when they are mixed with other diluted molasses care must be taken that the skimmings are not left too long or the alcoholic fermentation will be succeeded by the acid fermentation, which will cause the production of acetic acid, thus reducing the yield of alcohol.

"Dunder" is the fermented wash after it has undergone distillation, by which it has been deprived of the alcohol it contained. To be good it should be slightly bitter and fairly clear and free from acidity; it should be used only when fresh, except for blending rums.

Its use is to supply albuminous matter needed for the

growth of the yeast. This albuminous matter is derived from the old dead yeast rendered soluble during the distilling operations.

The Ingredients of the Wash.—The ferments and the method of conducting the fermentation have an influence on the rum produced as well as the form of still used in the distilling operations, and each should be arranged to suit the quality of rum or spirit to be produced.

If a high flavoured blending rum is required, the method of fermenting is, as previously stated, complicated, but the results of this special fermentation would be almost entirely neutralised, if this wash were distilled in the Coffey still in the usual way, instead of in the common still with one or two retorts. On the other hand, with a fermentation conducted so as to produce as little waste of alcohol as possible in the formation of acetic acid, even the common still would not produce a blending rum. The advantage of the continuous still over the common varieties are: First, that it is more economical in fuel. The results are more uniform, and it can be worked so as to produce almost any kind of spirit, from very strong and nearly pure silent spirit to ordinary rum containing a medium quantity of the natural esters. For the former the analyser should be, say 30 to 35 feet high, and for the medium rum, say 20 feet high, and arrangements can be easily made to throw more or less trays out of action, or some of the spirit can be drawn off at different heights, thus producing different qualities in the same operation.

The efficiency, or the yield of spirit, will be greater, the greater the height used.

From ordinary cane molasses the yield should be from 80 to 84 per cent. of the theoretical yield.

Jamaica, while making a good clean rum for direct consumption, is also making a special rum, mainly for blending purposes. When this is used with potato or other spirits, it does harm to the rum trade, but where it is used for blending

with genuine rums, such as those made in patent stills, it produces a very fair rum.

The ordinary Jamaica rum is made from diluted molasses containing 10 to 15 per cent. of sugar, the fermentation lasts for six or eight days, no yeast being added except that which is on the sides of the fermenting vat, or falls in from the atmosphere.

The pot-still is generally used, heated by fire or steam.

One or two rectifiers or pots are connected with the still, in which are collected low and high wines, the high wines being generally returned at once to the still.

The first portion coming over is rum at about 35° to 40° O.P.

The second portion consists of high wines of 15° to 25° O.P.

The final portion is the low wines.

Jamaica blending rums are made in a slightly different manner to the ordinary rums, and contain a much greater proportion of the esters and acids, both fixed and volatile, and are distilled always in pot stills. To procure these rums, acetic acid is first made as follows: The sediment from the fermenting vats is mixed with cane juice, dunder is also added, and skimmings. By allowing this mixture to ferment while passing over cane trash, much acid is produced. This is then added to the mash, which is allowed to ferment, generally twice as long as ordinary rum (say two weeks). Sometimes a special flavour is made by fermenting juice with old dunder, the clear liquor being used between the sludge at bottom and scum at top, and megass. This is added to the mash. From this it would appear as if the flavour is due to ethyl acetate, although it is also thought that the flavour is, to some extent, due to ethyl butyrate.

In Demerara, Queensland, and Louisiana, the fermentation is very much more rapid, and patent continuous stills are generally used.

In Brazil, juice is often used direct. In Mauritius, a small quantity of molasses is diluted, but not quite of so low a specific gravity as in Jamaica; this is allowed to ferment by wild yeasts finding their way in. When this has nearly finished fermenting, another quantity of molasses is added, and the process repeated several times. The fermenting mass, then full of yeast, is added to the ordinary wash in the fermenting tanks.

In the East, the Chinese prepare a special form of yeast, which is added to the fermenting tuns. In other countries, no special form of yeast is used or prepared, that which is used being the wild species.

Sugar planters are accustomed to expect 1 gallon of proof rum for every gallon of molasses employed. On the supposition that ordinary molasses contains 65 per cent. of sugar, and that, by careful fermentation and distillation, 33 parts of absolute alcohol may be obtained, we may then reckon upon 33 lb. of spirit, or about 4 gallons, which is a yield of about $5\frac{2}{3}$ gallons of rum, 30 per cent. over-proof, from 100 lb. of such molasses.

The operation of distilling is often carried out in the apparatus of the type of Fawcett, Preston and Co., represented in Fig. 223, and also in Corty's, Fig. 224.

A is the body of the still, into which the wash is put; B the head of the still; *c*, three copper plates fitted upon the upper part of the three boxes; these are kept cool by a supply of water from the pipe E, which is distributed by means of the pipes G. The least pure portion of the ascending vapours is condensed as it reaches the lowest plate, and falls back, and the next portion as it reaches the second plate; while the purest and lightest vapours pass over the goose-neck, and are condensed in the worm. The temperature of the plates is regulated by altering the flow of water by means of the cock F. For the purpose of cleaning the apparatus, a jet of steam or water may be introduced at *a*. A gas apparatus

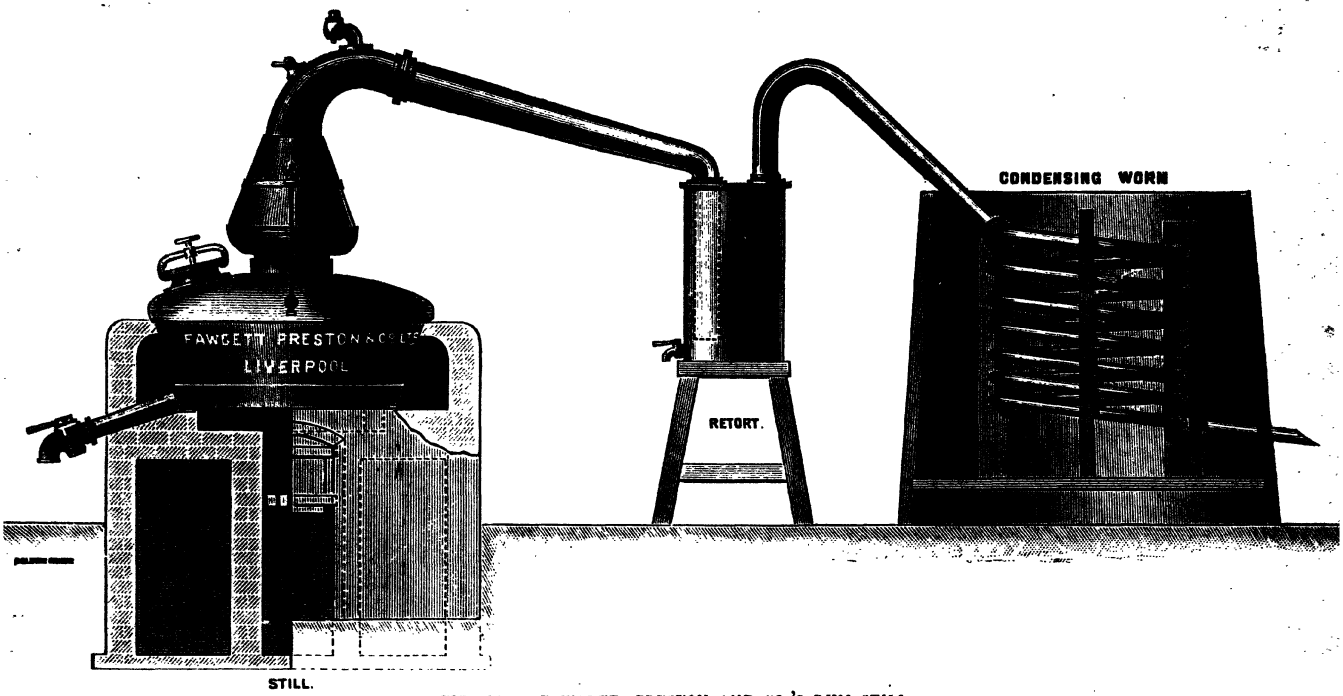

FIG. 223.—FAWCETT, PRESTON AND CO.'S RUM STILL.

is affixed at the screw-joint H, at the lower end of the worm, which addition is considered an important part of the improvement. The portion of the apparatus marked I becomes filled soon after the operation has commenced; the other end of pipe K is immersed in water in the vessel L. The advantage claimed for this apparatus is that the condensation proceeds in a partial vacuum, and that there is therefore a great saving in fuel. One of these stills, having a capacity of 400 gallons is said to work off four or five charges during a day of 12 hours, furnishing a spirit 35 per cent. over-proof.

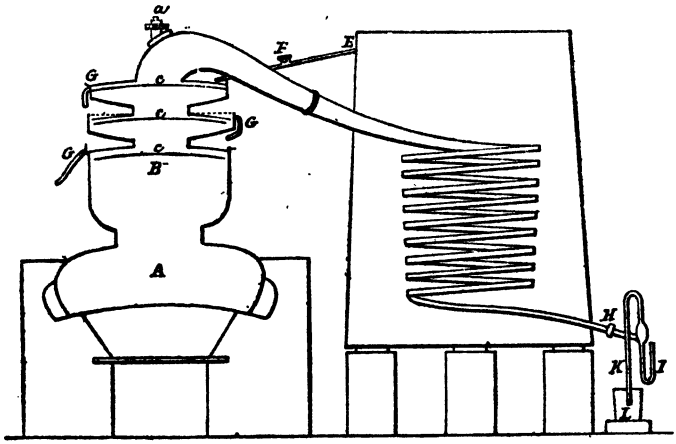

FIG. 224.—CORTY'S RUM STILL.

Fig. 225 represents a double still which is largely employed in the colonies. It is simply an addition of the common still A to the patent still B. From time to time the contents of B are run off into A, those of A being drawn off as dunder, the spirit from A passing over into B. Both stills are heated by the same fire; and it is said that much fine spirit can be obtained by their use at the expense of a very inconsiderable amount of fuel.

In Jamaica, however, they prefer the common still and double retorts, shown in Fig. 226. It is usually the custom to

pass the tube from the second retort through a charger containing wash, by which means the latter is heated previous to being introduced into the still; the tube then proceeds directly

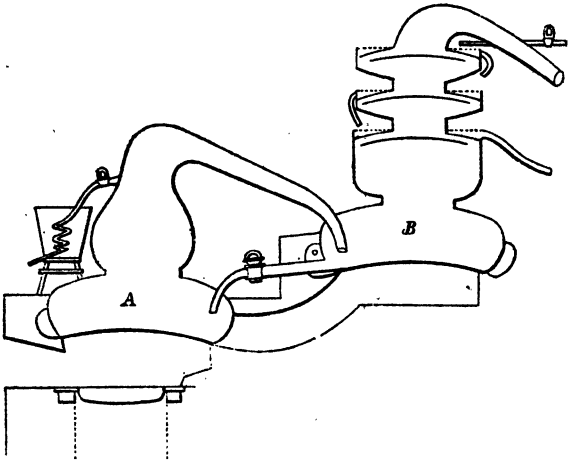

FIG. 225.—DOUBLE RUM STILL.

to the worm-tank. With an arrangement of this kind, a still holding 1000 gallons should produce 500 gallons of rum (30 to 40 per cent. over-proof), between the hours of five in the morning and eight in the evening. The first gallon of spirit obtained is termed "low wines," and is used for charging the retorts, each of which contains 15 to 20 gallons. After this, rum of 40 to 45 per cent. over-proof flows into clean cans or other vessels placed to receive it.

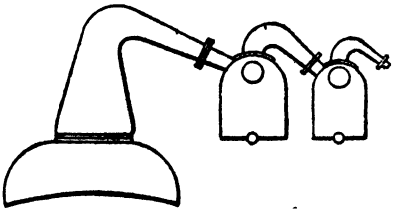

FIG. 226.—JAMAICA STILL.

The fire-heated pot-rum still in common use is shown in Fig. 227. The copper still body, which is sometimes made as large as 12 feet in diameter, is set in brickwork over a furnace

with a circular flue leading to a chimney. To the upper part of the still body a swan neck is connected, which again is connected with the upper part of the low wines receiver, a return cock and pipe being arranged for running low wines back to the still. A large outlet cock with copper connecting pipe leading outside the brickwork is provided for emptying the still body. Above the low wines receiver is fixed the rectifier —a cylindrical copper vessel filled with water, and containing a large number of small diameter tubes, upwards through which the alcoholic vapours are made to pass on their way to

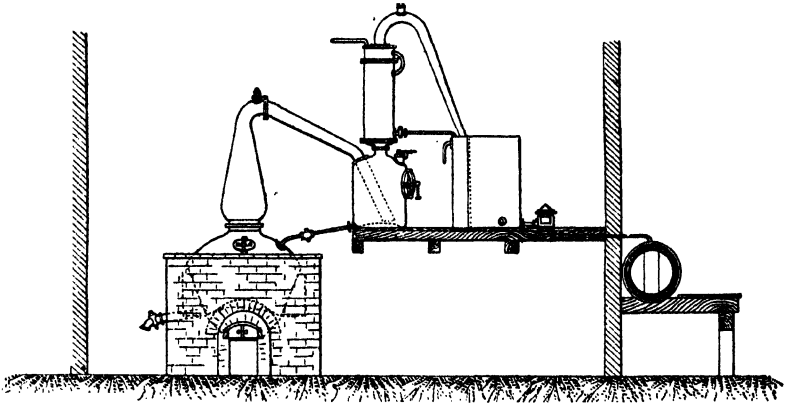

FIG. 227.—FIRE-HEATED RUM STILL.

the worm. A continuous supply of cold water enters at the upper part of the rectifier casing, passes downwards through and around the tubes, and leaves by the lower part of the casing conveyed by a pipe to the worm tank. A taper copper pipe leads from the upper part of the rectifier downwards to a taper copper condensing worm, set in a large tank, through which a supply of cold water is continually passing. In this worm the final condensation of the alcoholic vapours takes place, and from the lower end of the worm the spirit is run off into a brass safe, with glass panels, brass cover and lock, and containing glass test vessels in which are floated areometers,

thus enabling the attendant to divert the stream of spirit issuing from the safe by one or other of two separate copper pipes leading to the lock-up spirit room, so that spirit of varying densities may be run into separate collecting vessels without affording any ready means of access to the spirit in the still room. The usual fittings on the still body consist of manhole door, and cover of brass, air valve, wash-out cock, and supply cock. It is also frequently fitted with revolving brass stirrers and drag chains, worked by a vertical shaft passing upwards through a gland at the top of the swan neck, and worked by hand or steam-power gear outside. The stirrers are useful in

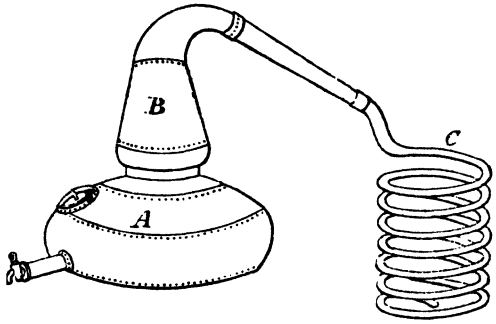

FIG. 228.—COPPER FIRE STILL.

preventing the adherence of any solid matter to the bottom of the still, and keeping up a constant admixture of the various contents. Automatic air-valves are fixed on the highest part of the swan neck and pipe leading from the rectifier to the worm, so that all the air can be readily swept out of the still on commencing work, and thus prevent a vacuum forming in it, and any subsequent danger of its collapsing by external pressure.

Pontifex and Wood have supplied large numbers of the ordinary pot-fire stills to planters and distillers in Jamaica and the colonies; the most general form being similar to Fig. 228. A is the still, B the head, and C the condensing worm. The

retorts D and E (Fig. 229), having a limited rectifying effect, are sometimes inserted. We are informed that the manufacture of rum pays at the present time better than sending home the sugar, owing to the condition of that trade in England.

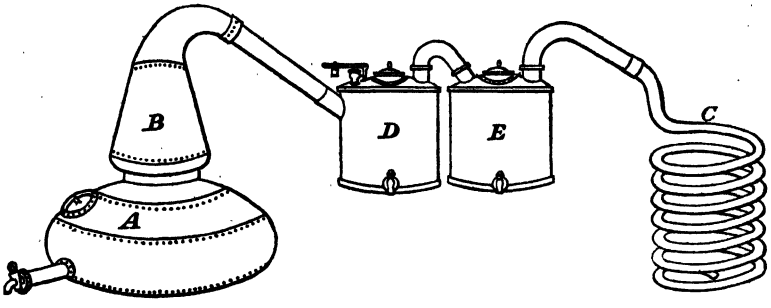

FIG. 229.—COPPER FIRE STILL WITH TWO RETORTS.

Fire stills are thought a great deal of by some distillers, as they state that the action of the fire imparts a flavour of its own to the spirit, but a copper steam still with head and worm is preferable, both for economy of fuel and cleanliness.

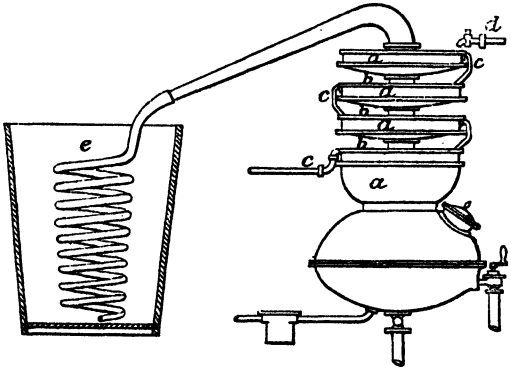

FIG. 230.—STEAM STILL WITH CORTY'S HEAD.

For obtaining a stronger spirit, and, at the same time, retaining the flavour, Corty's rectifying head is used, as in Fig. 230, in place of the ordinary head. Its action is as follows: the vapour passes into the chambers *a* by means of

pipes *b*, where it is made to go against the top of these chambers by means of baffle plates; the still is first charged with the wash, the steam then being turned on by means of the lower valve into the jacket. A small stream of cold water is allowed to flow on the top chamber *a* by the cock *d*, which overflows on the other chambers *a*, *a*, and *a*, by means of the overflow pipes *c*; the water gets gradually warmed, the cold water meeting the cooled or rectified vapour which passes into the condensing worm *e*, to be condensed.

Arrangement of Rum Distillery.—Figs. 231, 232, and 233, show an arrangement designed by Manlove, Alliott and Co. Molasses, scum, sediment, and washings are mixed with "dunder" or spent wash in the mixing vat shown on the upper stage. After being thoroughly incorporated, the mixture is led down into the fermenting vats, where it is left until fermentation is completed. The fermented wash is then raised from the fermenting vats into a high-level wash-tank by means of a small steam pump. From the wash-tank the wash passes downwards through the refrigerator into the upper chamber of the continuous column of the still. This column consists of a number of duplicate chambers of brass or copper, each fitted with a horizontal diaphragm, with projecting nozzles so arranged that the wash in passing downwards through the system of boxes and flowing over the upper edges of the nozzles is met by an ascending current of vapour, which, being brought into intimate contact with the wash, is partially condensed, thus raising the temperature of the wash and permitting alcoholic vapours to become gradually purified on their passage upwards to the refrigerator.

Between the top of the column and the condenser a small save-all is provided to intercept any watery particles that may be carried over by the alcoholic vapours. In the refrigerator the wash on its way to the still column is heated by warm alcoholic vapours from the still column. These again are freed in the refrigerator from a further portion of watery vapour,

and thence pass downwards into the condenser, where the final condensation of the alcoholic vapours takes place, and

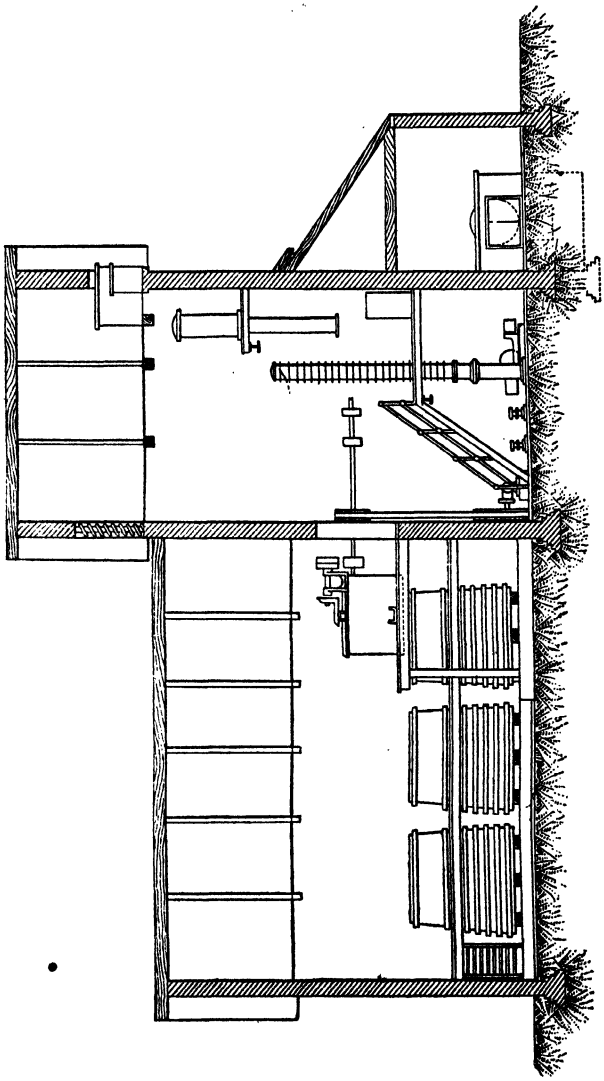

FIG. 231.—MANLOVE, ALLIOTT AND CO.'S RUM DISTILLERY.

from the bottom of which the steam is drawn off to the spirit room. At the point where the spirit leaves the condenser a

small closed glass vessel is provided with the necessary testing apparatus to ascertain the strength of the spirit. The water supply for the condenser is drawn from the water-tank on the overhead stage alongside the wash-tank. This tank is

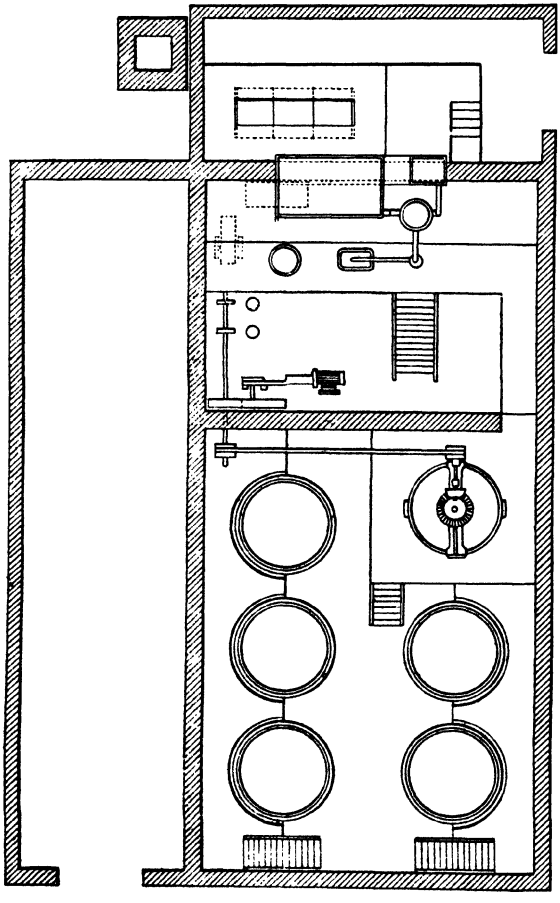

FIG. 232.—MANLOVE, ALLIOTT AND CO.'S RUM DISTILLERY.

supplied by a small pump driven by an engine shown on the ground floor. This engine also drives a pump or pumps for raising molasses and other materials to the mixing vat, and also drives the agitators of the mixing vat. The wash on

arriving at the bottom of the still column is heated by steam blown directly into the wash. The supply of steam is controlled by the regulator or governor shown on the staging alongside the still column. The action of this governor is as follows :—

The lower vessel of the governor is connected with the base of the still, which is also connected to a special steam-regu-

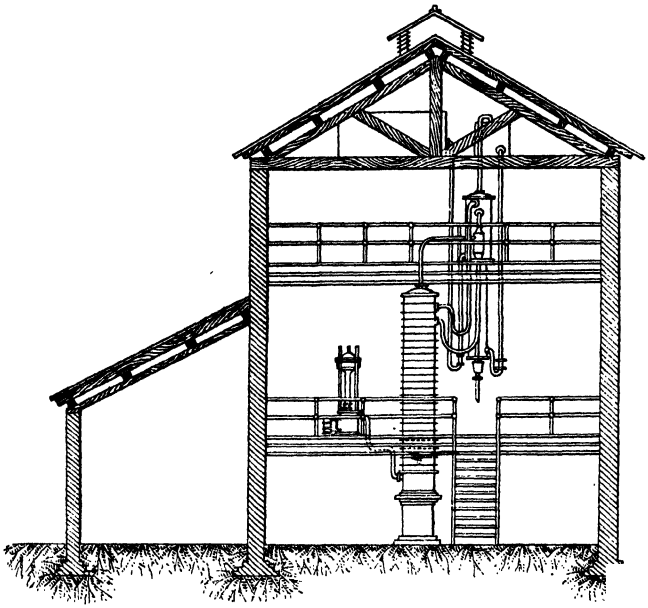

FIG. 233.—MANLOVE, ALLIOTT AND CO.'S RUM DISTILLERY.

lating valve fixed on the lower part of the governor casing. The slight pressure in the lower part of the still forces the wash into a lower part of the regulator. If steam continues to be admitted, and the pressure in the base of the still increases, the wash in the base of the regulator is forced up the central pipe into the upper chamber of the regulator, where it raises a float, and shuts off the steam supply to the still. On the pressure at the bottom of the still decreasing, the level of the

wash in the regulator falls, the float follows and opens the steam valve, and the spent wash or dunder is run off from the base of the still.

Steam is supplied by a multitubular boiler, with a special grate arranged for burning megass.

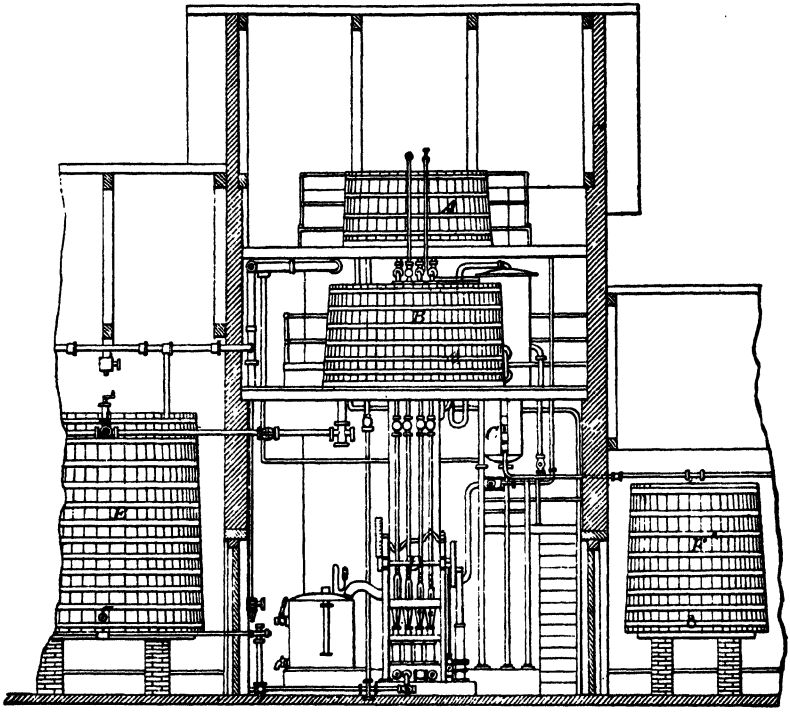

FIG. 234.—BRAZILIAN STILL-HOUSE.

Fig. 234 shows the arrangement of one still-house of six made for the Brazilian Central Sugar Factories, as designed and erected by Pontifex and Wood. The still is capable of making 50 gallons of proof spirit per hour from molasses. The parts are; A, wash back; B, mixing vat; C, continuous still; D, pumps; E, fermenting vats; F, spirit store vats. The same firm design and erect distilling plant for making spirit from grain, fruits, wines, etc.

Purifying.—When new, rum is white and transparent, and has a peculiar, unpleasant flavour. This flavour has to be removed before the spirit is fit for the market; this may be done by the use of charcoal and lime, the former to absorb, and the latter to combine with the oil, and to precipitate it in the form of a soap. A wooden box, about 2 feet long and 1 foot in diameter, with a division running down to within an inch of the bottom, is filled with coarsely powdered charcoal, through which the spirit is made to pass as it runs from the worm. The charcoal absorbs a considerable portion of the oil, and the rum consequently flows from the filter much purified. It is then conveyed to the rum butt (of about 300 or 500 gallons capacity), which is situated at a good elevation, and at once heated with a little caustic lime, and well stirred-up. After an interval of two days, the flavour may be tried, and if found satisfactory, the contents of the butt may be drawn off through a charcoal filter, similar to the first, into the colouring butt to be coloured. But if the lime used be not enough, a little more must be added, mixing the whole together again; and after two days it may be run off as noticed. At this period, the lime will be seen at the bottom of the butt in combination with the oil, forming together a kind of soapy precipitate.

When this process has been carefully conducted, quite new rum will have the appearance and flavour of aged spirit. Pineapple juice and that of other fruits, also butyric acid have sometimes been added to rum to improve the flavour, but not with much success.

Probably the improvement of rum on ageing is due to the butyric acid naturally present uniting with the alcohol to form ethyl butyrate.

Colouring.—The next operation is to colour the rum, and this is a very important part of the process. It frequently happens that really good rum is quite spoilt by being badly coloured, and this should therefore be strictly attended to.

The best description of sugar for boiling "colouring" is a well-grained washed muscovado, such as is commonly chosen in Jamaica. It is placed together with a little water and 1 per cent. caustic soda on the weight of the sugar, in a large copper or iron boiling-pan, to which heat is applied. The contents are well stirred up by means of a wooden oar or rake throughout the process. As the boiling proceeds, bubbles rise, large and heavy at first, then small and more quickly, the colour of the mass changing from brown to deep black. The fire is then withdrawn, and after cooling some strong proof rum is added, the whole being stirred hard meanwhile. When quite cool, it is poured into a cask and allowed to settle. Good colouring is quite thick, clear, and bright; three pints should be sufficient to colour 100 gallons of spirit. Special caramel colouring is now made by manufacturers, such as Messrs. A. Boake, Roberts and Co., and others, which is more suited for colouring purposes, because the obscuration is far less, and the quality more uniform than with colouring that can be made on a small scale.

Obscuration.—In testing a rum, first by distillation, second by specific gravity, there is a difference, if the rum contains any sugar, caramel, etc. dissolved; this difference is the obscuration. In other words, the matters in solution tend to lower the true alcoholic strength or mask it, when tested by the ordinary hydrometer.

A good instrument for testing the colouring properties of caramel is Lovibond's tintometer. When coloured, the rum is filled into hogsheads for sale.

Commerce.—Pure rum, as made in the West Indies, is not often met with in commerce. The spirit which is so largely drunk in England as rum, is sometimes nothing more than mixtures of British spirit, or "silent" spirit, as it is called, with small quantities of genuine rum, and of "essence of rum," a butyric compound made for the purpose of preparing a fictitious rum. Some probably contains no genuine rum at

all, and consists merely of silent spirit, or beet spirit, flavoured with this volatile essence. The consumption of rum is steadily declining in England, its place being taken by other spirits.

The following analyses (Tables A and B) of genuine Jamaica rums from the Jour. Soc. Chem. Industry, May 1907, are published with the permission of W. Collingwood Williams, B.Sc., F.I.C.

TABLE A.—"COMMON CLEAN" RUMS.

Reference No.	Alcoholic Strength (per cent. by Vol.)	Total Solids (grms. per 100 c.c.)	Grms. per 100 litres of Alcohol					
			Total Acids (as Acetic)	Volatile Acids (as Acetic)	Esters (as Ethyl Acetate)	Higher Alcohols (as Amylic)	Furfural	Aldehydes
21	80·4	0·43	83	75	1058	..	3·6	12·5
10	82·1	0·38	77	74	565	106	3·5	7·5
3	79·4	0·36	88	76	557	82	1·8	7·5
16	80·2	0·88	78	52	516	110	6·0	15·0
9	82·0	0·01	55	55	480	79	7·0	5·0
17	81·7	0·52	51	38	388	100	4·5	17·5
15	78·3	0·14	130	76	372	150	4·5	18·0
2	78·2	0·19	70	55	370	79	3·3	9·0
14	78·8	0·34	81	72	355	145	2·3	12·5
19	76·5	0·64	80	61	351	79	4·0	17·5
6	78·8	0·25	30	21	332	147	1·0	20·0
18	79·3	0·02	41	41	321	73	4·5	6·0
11	81·3	0·48	82	60	308	89	9·0	20·0
7	79·5	0·60	82	63	303	122	2·7	25·0
13	77·5	0·21	155	146	297	70	3·7	10·0
8	81·8	0·38	59	46	266	128	11·5	20·0
5	80·4	0·39	90	62	216	62	6·3	15·0
12	79·9	0·20	110	56	211	107	3·2	25·0
4	78·6	0·34	76	61	181	46	4·6	30·0
28	78·7	0·43	76	61	164	..	..	..
20	68·6	1·16	47	27	88	..	..	..
Average .	79·1	0·43	78·5	61	366·5	98·5	4·5	15·3
Maximum	82·1	1·16	155	146	1058	150	11·5	30·0
Minimum	68·6	0·01	30	21	88	46	1·0	5·0

ALCOHOL FROM BEET.—Beet contains 80 to 85 per cent. of water, and about 12 to 16 per cent. of sugar, the remainder being woody fibre and albumen. The conversion of the sugar into alcohol is effected in several different ways, of which the following are the principal: (1) By rasping the roots and

TABLE B.—"FLAVOURED" RUMS.

Reference No.	Alcoholic Strength (per cent. by Vol.)	Total Solids (grms. per 100 c.c.)	Grms. per 100 litres of Alcohol					
			Total Acids (as Acetic)	Volatile Acids (as Acetic)	Esters (as Ethyl Acetate)	Higher Alcohols (as Amylic)	Furfural	Aldehydes
1	79·5	0·26	133	122	1204	124	2·9	13·0
25	77·3	0·29	145	137	981	..	..	..
26	66·1	none	109	109	866	103	4·1	..
23	77·7	0·22	104	93	787	80	2·7	17·5
22	80·6	0·22	45	39	599	144	4·5	37·5
24	79·9	0·61	127	116	552	83	12·0	15·0
27	80·0	0·55	55	53	391	..	..	..
Average .	77·3	0·31	102·5	95·5	768·5	107	5·2	20·7
Maximum	80·6	0·61	145	137	1204	144	12·0	37·5
Minimum	66·1	none	45	39	391	80	2·7	13

submitting them to pressure, and fermenting the expressed juice; (2) By maceration with water and heat or diffusion; (3) By direct distillation of the roots.

By Rasping and Pressure.—The spirit obtained by this almost obsolete process is preferable to that obtained by the others, but it is considerably higher in price, as it requires a larger stock and much more labour. The process is adopted chiefly in the large sugar factories, where all the necessary utensils are always at hand, and the only additional expense incurred is the distilling apparatus. The roots are washed, rasped, and pressed exactly as in the manufacture of sugar. By this means, 80 or 85 per cent. of juice is obtained, but this proportion is much increased by permitting a stream of water to flow upon the rasping instrument. The utmost cleanliness is essential to these processes; all the utensils employed should be washed daily with lime-water to counteract acidity.

Before fermentation, the juice from the rasper and the press is brought into a boiler and heated by steam to about 28° C. (82° F.); at this temperature it is run off into the

fermenting vats. Here it is necessary to add to the juice a small quantity of concentrated sulphuric acid for the purpose of neutralising the alkaline salts which it contains, and of rendering it slightly acid in order to hasten the process; this quantity must not exceed 2½ kilo (5½ lb.) to every 220 gallons of juice, or the establishment of fermentation would be hindered instead of promoted. The addition of this acid tends also to prevent the viscous fermentation to which the juice obtained by rasping and pressure is so liable. A small quantity of brewers' yeast—about 5 grains per pint of juice—is sufficient for this; the yeast must previously be mixed with a little water. An external temperature of about 20° C. (68° F.) must be carefully maintained.

The fermentation of acidulated beet-juice sets in speedily. The chief obstacle to the process is the mass of thick scum which forms upon the surface of the liquor. This difficulty is sometimes obviated by using several vats, and mixing the juice, while in full fermentation, with a fresh quantity. Thus, when three vats are employed, one is set to ferment; at the end of four or six hours, half its contents are run into the second vat, and here mixed with fresh juice. The process is arrested, but soon starts again in both vats simultaneously; the first is now allowed to ferment completely, which is effected with much less difficulty than would have been the case had the vat not been divided. Meanwhile the second vat, as soon as the action is at its height, is divided in the same manner, one-half its contents being run into the third. When this method is employed, it is necessary to add a little yeast from time to time when the action becomes sluggish.

By Maceration.—The object of this process is to extract from the beets by means of water or spent liquor all the sugar which they contain, without the aid of rasping or pressure. Spirit is thus produced at considerably less expense, although it is not of so high a quality as that yielded by the former process. The operation consists in slicing up the beets with

a root-cutter, and then allowing the slices to macerate in a series of vats at stated temperatures. It is essential that the knives by which the roots are cut should be so arranged that the roots are divided into slices having a width of $\frac{1}{2}$ inch and a thickness of $\frac{1}{25}$ inch, and a variable length; the roots are of course well washed before being placed in the hopper of the cutter. When cut, the beets are covered with boiling water in a macerator of wood or iron for one hour; the water should contain 2 lb. of sulphuric acid to every 1000 lb. of beets. After this, the water is drawn off into a second vat, in which are placed more beets, and allowed to macerate again for an hour. This is repeated a third time in another vat, and the juice, which has now acquired a density equal to that obtained by rasping, is run off into the fermenting vat.

When the first vat is empty, it is immediately refilled with boiling water and fresh beets; the juice from this operation is run into the second vat, when the contents of that one are run into the third. To continue the operation, the beets are completely exhausted by being macerated for an hour with a third charge of boiling water (acidulated as in the former case). The exhausted pulp is removed to make room for fresh slices; and the first vat is then charged with juice which has already passed through the second and third vats. After macerating the fresh beets for one hour, the charge is ready for fermentation. In ordinary weather the juice should now be at the right heat for this process, viz. about 22° or 24° C. (72° to 78° F.); but in very cold weather it may require some re-heating. The fermentation is precisely similar to that of the pressed juice, and calls for no special remark. It is usually complete in from 24 to 30 hours.

By Direct Distillation of the Roots.—This process commonly called Leplay's method, consists in fermenting the sugar in the slices themselves. The operation is conducted in huge vats, holding as large a quantity of matter as possible, in order that the fermentation may be established more easily. They

usually contain about 1300 gallons, and a single charge consists of 2200 lb. of the sliced roots. The slices are placed in porous bags in the vats, containing already about 440 gallons of water acidulated with a little sulphuric acid; and they are kept submerged by means of a perforated cover, which permits the passage of the liquor and of the carbonic acid evolved; the temperature of the mixture should be maintained at about 25° or 27° C. (77° to 81° F.). A little yeast is added, and fermentation speedily sets in; it is complete in about 24 hours or more, when the bags are taken out and replaced by fresh ones; fermentation declares itself again almost immediately, and without any addition of yeast. New bags may, indeed, be placed in the same liquor for three or four successive fermentations without adding further yeast or juice.

The slices of beets charged with alcohol are now placed in a distilling apparatus of a very simple nature. It consists of a cylindrical column of wood or iron, fitted with a tight cover, which is connected with a coil or worm, kept cool in a vessel of cold water. Inside this column is arranged a row of perforated diaphragms or partitions. The space between the lowest one and the bottom of the cylinder is kept empty to receive the condensed water formed by the steam, which is blown into the bottom of the cylinder in order to heat the contents. Vapours of alcohol are thus disengaged from the undermost slices, and these vapours as they rise through the cylinder vaporise the remaining alcohol, and finally pass out of the top at a considerable strength, and are condensed in the worm. When all the contents of the still have been completely exhausted of spirit, the remainder consists of a cooked pulp, which contains all the nutritive constituents of the beet, except the sugar.

By Diffusion.—In this case the juice is extracted by diffusion, instead of rasping, or macerating, otherwise the manufacture of the alcohol is similar. The loss of sugar in the diffusion is 0·3 to 0·4 per cent.

The yield of absolute alcohol should be 60 litres for every 100 kilos of sugar sent to the fermenting vats.

In France, Germany, and other beet-growing countries, a large quantity of molasses from the beet factories and refineries is used for the manufacture of alcohol, that from the latter being the better, both as regards yield and quality. As beet molasses are usually alkaline, it is necessary to add acid till faintly acid.

In Germany, where duty is imposed upon the distilleries according to the capacity of the fermenting vats, the molasses is not diluted to such an extent as in France, where the duty is upon the manufactured article. In the former case, the liquor, before fermentation, tests usually as high as 12° B., whereas in France it is diluted until it tests 6° or 8° B., a degree which is much more favourable to rapid and complete fermentation. In consequence of this difference in the concentration of the unfermented liquor, the degree of temperature at which the process is begun is higher in the case of the strong liquor than when it is more dilute. In Germany, the temperature at which fermentation begins is about 25° C. (77° F.), and this is raised during the operation to 30° C. (86° F.), whilst in France a much lower temperature suffices. Moreover, owing to the enormous size of the French vats, the temperature rises so quickly that it must be moderated by passing a current of cold water through a coil of pipe placed on the bottom of the vat. Two cwt. of molasses at 42° B. will furnish about 6 gallons of pure spirit. The spirit of molasses has neither the taste nor the odour of spirit from wine ; it is sweeter, and when the distillation and rectification have been properly conducted, it may be considered as a type of alcohol in its purity, for it has neither taste nor any peculiar aroma. In this state it is called "fine spirits," and may be employed in the manufacture of liqueurs, for improving common brandies, and especially for refining the *trois-six* (rectified spirit) of Montpellier.

In those districts of France where the beet is largely cultivated for the manufacture of sugar, and the molasses is converted into alcohol, the waste liquor is made a source of no inconsiderable profit, by concentrating it and incinerating the residue, from which is obtained, for the use of the soap-boiler, caustic potash. In addition to the alcohol, good beet molasses will yield 10 or 12 per cent. of commercial, or from 7 to 8 per cent. of refined potash. In addition to this, a method has been proposed by Camille Vincent for collecting the ammonia-water, tar, and oils given off when this residue is calcined, and utilising them for the production of ammonia and chloride of methyl.

RECTIFICATION.—The product of the distillation of alcoholic liquors, termed "low wines," does not usually contain alcohol in sufficient quantity to admit of its being employed for direct consumption. Besides this, it always contains substances which have the property of distilling over with the spirit, although their boiling-points, when in the pure state, are much higher than that of alcohol. These are all classed under the generic title of "fusel-oil": owing to their very disagreeable taste and smell, their presence in spirit is extremely objectionable. In order to remove them, the rough products of distillation are submitted to a further process of concentration and purification. Besides fusel-oil, they contain other substances, such as aldehyde, various ethers, etc., the boiling-points of which are lower than that of alcohol; these must also be removed, as they impart to the spirit a fiery taste. The whole process is termed *rectification*, and is carried on in a distillatory apparatus.

Heat is first applied gradually, in order to remove the most volatile impurities, and to concentrate them in the first portion of the distillate. When the spirit coming over possesses no objectionable odour, it is caught separately as long as it is of sufficient strength. The receiver is then changed again, and the remainder is collected apart, as weak

spirit which contains much fusel-oil; the first and last runnings are then mixed together and re-distilled with the next charge. When a strong spirit is required, rectification may be repeated several times. It is customary, however, with the improved apparatus of modern times, to produce at the outset spirit containing but little fusel-oil and at least 80 per cent. of alcohol; this is then purified and concentrated in the above manner, and afterwards reduced with water to the required strength.

The first operation in the process of rectification is to neutralise the acids; this is effected by means of milk of lime which is added to the liquor in quantity depending upon its acidity; the point at which the neutralisation is complete is determined by the use of litmus paper. In the subsequent process of distillation, the determination of the exact moments at which to begin and to cease collecting the pure spirit is very difficult to indicate. It must be regulated by the nature of the spirits; some may be pure 20 or 30 minutes after they have attained the desired strength; and some only run pure an hour, or even more, after this point. The product should be tasted frequently, after being diluted with water, or a few drops may be poured into the palm of the hand, and after striking the hands together, it will be known by the odour whether the spirit be of good quality or not; these two means may be applied simultaneously.

The process of rectification is usually carried on in the apparatus shown in Figs. 235 and 236. A is a still which contains the spirits to be rectified; it should be four-fifths full. The condenser E and the cooler G are filled with water. After closing the cocks F and I, the contents of the still are heated by steam, which is introduced slowly at first. The vapours of spirit given off pass above the plates *a* of the column B, and escape through C and D into the condenser E, where they are condensed on reaching the lentils *d d'*, and return in a liquid state through *f f'* and *g g'* to the upper plates

of the column B. In these return pipes the liquid is volatilised, and constantly recharged with alcohol to be again condensed, until the water in the condenser is hot enough to permit the lighter alcoholic vapours to pass into the coil *c*, without being reduced to the liquid state. When this is the case, the vapours pass through F into the cooler G, where they undergo complete condensation.

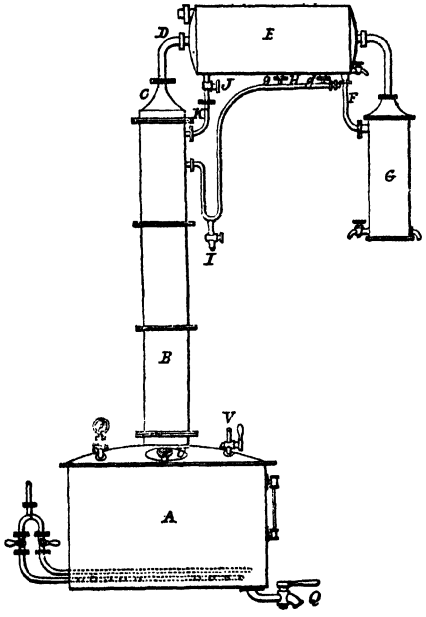

FIG. 235.—RECTIFIER.

Great care must be taken that the heat is not so great as to permit any of the vapours to pass over uncondensed, or to flow away in a hot state; and also to keep up a constant supply of water in the cooler, without producing too low a temperature; the alcoholic products should run out just cold. The highly volatile constituents of the spirit come over first, that which follows becoming gradually pure until it consists of well-flavoured alcohol; after this, comes a product containing

the essential oils. The more impure products are kept apart from the rest, and re-distilled with the next charge. Some hours generally elapse before alcohol begins to flow from the cooler. The purest alcohol is obtained while its strength is kept between 92° and 96° B., and the operation is complete when the liquid flowing through the vessel marks not more than 3° or 4° B.: it is better, however, to stop the still when the backing or "feints" indicate 10° B., because the product

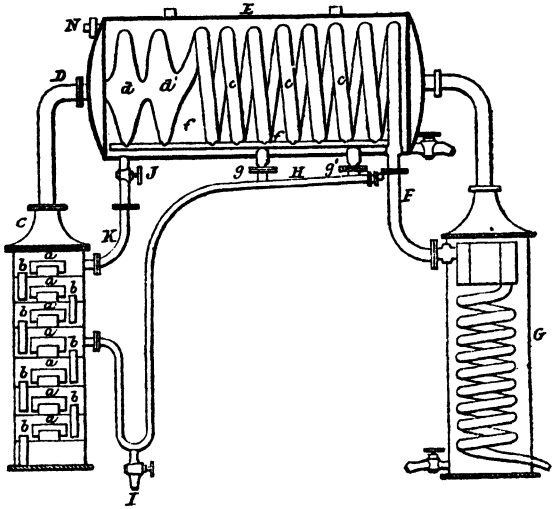

FIG. 236.—RECTIFIER.

after this point contains much fusel-oil, and is not worth collecting.

In order to cleanse the apparatus—which should be performed after each working—the still A is emptied of water by opening the cock Q. The contents of the condenser are then emptied in like manner by opening the cock J, through which they flow upon the plates in the column B, and wash out essential oils which remain in them. These two cocks are then closed, and the door U is removed. The water in the cooler G is run by means of a pipe into the still A, so as

partially to cover the steam-coil in the latter. After again securing the door U, a strong heat is applied, and the water in the still is well boiled, the steam evolved thoroughly cleansing all the different parts of the apparatus; this is continued for 15 or 20 minutes, when the heat is withdrawn and the still is left to cool gradually.

The capacity of the rectifying apparatus has a good deal of influence upon both the quantity and the quality of the spirit obtained. Besides being much more difficult to manage, a small apparatus will not yield so large a proportion of spirit as a more capacious one; nor will its products be of equally good flavour. The proportion of alcohol which may be obtained from a successful rectification is very variable; it depends upon the nature of the spirit rectified, the method of extracting the sugar, and the manner of conducting the distillation; it will also be less in proportion to the quantity of fusel-oil contained in the raw spirit. The average loss of pure alcohol during the process of rectification is generally estimated at about 5 per cent. To reduce the loss as far as possible, and to economise fuel, larger stills of the continuous type are now employed. See Coffey Still, page 750.

Yield.—The yield of alcohol depends upon the amount of fermentable sugars in the molasses, and the skill employed in fermenting and distilling. Low molasses generally have the following composition:—

	Low Cane Molasses.	Low Beet Molasses.
Cane (Sucrose)	38	50
Grape (reducing sugars)	9	—
Organic matter	18	18
Salts	10	12
Water	25	20
	100	100

But the composition varies very much even in the same district, and is generally much richer in sugars than the above. In analysing molasses, it is best to resort to Clerget's method.

According to Pasteur, we should obtain theoretically

48·47 grm. of alcohol from 100 grm. of glucose or fructose sugars.

The quantity of alcohol produced on the manufacturing scale is very much below the apparent theoretical yield, as indicated by analysis due to—

1. Some sugars not being easily fermentable or the analysis indicating too much sucrose.

2. Losses due to the action of bacteria.

3. The presence of impurities probably organic, which prevents the attenuation being perfect.

Even with the best fermentation some reducing substance is left in the spent wash, but the impurities in the wash or dunder do not exert a deterrent effect on fermentation. In the case of beet molasses containing raffinose, boiling with sulphuric acid eliminates part of the volatile organic acids, and also changes the raffinose into easily fermentable sugars.

In no case in practice is the attenuation perfect. The difference between the sp. gr. of the solution before and after fermentation is called the attenuation, and is a measure of the degree of fermentation that has taken place.

Industrial Alcohol.—Besides the ordinary methylated spirit, consisting of alcohol 90 parts, wood naphtha 10 parts, a mixture of alcohol 95 parts, and wood naphtha 5 parts, called industrial methylated spirit, is now authorised for use in the arts and manufactures. Also the ordinary methylated spirit has now a little mineral naphtha added. That the recent regulation has promoted the use of alcohol is apparent from the following figures. The proof gallons used for all purposes except as a beverage for 1906 amounted to 6,055,300 gallons, and for 1907, to 6,491,000 gallons.

In France in 1905, 12,475,186 gallons were used, and in 1906, 14,409,547 gallons, an increase of 1,934,361 gallons.

In America, amended regulations, September 1907, have rendered it easier for manufacturers to use alcohol and distillers to manufacture; but to withdraw rum from bond, free of tax,

for denaturation, it must be made to 150° proof (U.S.) for some industries, and 180° proof in others.

Test 1. *Determination of Alcohol.*—If the liquor is a pure one, that is, contains only water and alcohol, the quantity of alcohol can be ascertained by cooling to the standard temperature, and testing the specific gravity by a hydrometer or specific gravity bottle, and referring to the alcoholic table, page 732. If, however, other bodies are present, take, say 100 c.c. at 60° F. and add a slight excess of caustic soda solution, till it reacts blue to litmus, distil over about two-thirds and make up to 100 c.c. at 60° F., mix, and read off the specific gravity, and refer to the table.

In testing strong spirits, dilute two to four times before distilling.

Test 2.—If no convenient still and condenser are at hand, the strength may be determined by taking a measured volume, testing the specific gravity and evaporating off the alcohol, then make up the "extract" to the original volume with distilled water. The specific gravities must be taken at the standard temperature.

Then

$$\frac{\text{sp. gr. of original liquid}}{\text{sp. gr. of extract}} = \text{sp. gr. of the alcohol.}$$

Great care must be taken to conduct the tests at the standard temperature, or to make the necessary corrections for differences in temperature. For excise and commercial purposes, the strength of the spirit is often expressed as so many degrees of proof spirit.

Proof spirit has a specific gravity of 0·9198 and contains 49·24 per cent. by weight of pure alcohol, or 57·06 per cent. by volume.

Spirits weaker or stronger than this are described as so many degrees under (u.p.) or over proof (o.p.), and this number indicates the number of volumes of water that are to be sub-

tracted from or added to 100 volumes of the spirit to bring it to the standard of proof spirit.

Thus a spirit 15° u.p. indicates that the spirit requires 15 measures of water to be removed from 100 measures of the spirit to bring it to proof or standard strength; 20° o.p. requires 20 measures of water to be added to 100 measures of the spirit to reduce it to proof.

The revenue department in England usually employs Sikes' hydrometer and tables for excise and customs purposes.

In the United States Tralles' tables are legalised and consequently the spirit present is given as percentage by volume or measure, and the proof spirit is defined as that alcoholic liquor which contains one half of its volume of alcohol 0·7939 sp. gr. at 60° F., therefore 100 volumes of absolute alcohol would contain 200 per cent. of proof spirit according to the U.S. excise and 175¼ per cent. proof spirit according to the English excise.

Besides stating the proportion of spirit in spirituous liquids in terms of proof spirit, it is also usual to express the proportion as percentage of alcohol by weight and percentage of alcohol by volume, see table, page 732.

The usual method adopted in France, Belgium and Germany is by volume.

To calculate the quantity of spirit of any required proof strength that is contained in a number of gallons of a weaker spirit.

$$\frac{\text{Per cent. proof required} \times 100}{\text{Per cent. proof in weaker spirit}}$$

= gallons of required proof spirit contained in 100 gallons of the weaker spirit.

PRODUCTION AND COMMERCE

CHAPTER XXV.

PRODUCTION OF SUGAR IN VARIOUS COUNTRIES.

IN the following statistics relating to the production of, and commerce in, sugar, molasses and rum, the term sugar must be taken to mean cane sugar or beet sugar according to the tropical or temperate climate of the country affording it, unless otherwise stated. Figures having reference to other sugars of less importance will be found under their respective heads.

Australia.—The first sugar known to have been produced in Queensland was made by Buhôt, of Barbados, from cane grown in the Botanic Gardens, Brisbane, in May 1862. In 1863, Captain L. Hope had 20 acres under cane. In 1900, 108,535 acres were in cultivation, and the quantity of sugar manufactured was 92,554 tons, of the value of 920,913*l.* New South Wales had 22 acres under cane in 1864, and in 1899, 9435 acres yielding 15,352 tons of sugar. The progress of the industry in the two colonies has been very rapid, especially in Queensland, where the area of suitable land is very large. The unbiassed opinion of those having experience of the cane plantations is that the climate of Queensland, particularly in the north, renders the employment of white labour in the field

almost impossible, whereas in New South Wales the plantations are worked as a rule without the assistance of coloured labour. The extreme humidity of the atmosphere rather than the high temperature is the real obstacle to the successful employment of white labour. After various legislative enactments during the past fifteen years, it is now settled that after 1906 no South Sea Islanders or coloured Kanaka labour shall be employed in the sugar plantations.

Until recently the Queensland planters usually crushed their own cane, but since the inauguration of the Government Central Mill System, some of the large estates have been divided into small farms, which have been rented or sold to cane growers who are white settlers. According to Dr. Maxwell there were at the time of his report (1900) 2610 cane growers, with an average per grower under sugar cane of 42·6 acres. As labourers working for hire, many of these settlers would never have been found on the soil, but as freemen with a personal interest in the occupancy of the land, they are the hardest performers of given kinds of work in the field, and by their labour they have already modified the exclusive employment of subject labour, even in localities where hitherto the white labourer has hardly been found. In 1885, there were 10,755 Pacific Islanders employed in Queensland, but in 1899 with double the area under cultivation, the number was reduced to 8826. In 1900, the number of Kanakas employed was 8795 or less than 2 per cent. of the white population, while the whites engaged numbered 22,500 besides others more or less dependent on the sugar industry. The value of the various factories and plant employed inclusive of plant in the field was 3,500,000*l.* The total area under cultivation for milling purposes was 110,657 acres, the capital value at 4*l.* per acre amounting to 442,628*l.*, and the crops worth 500,000*l.* The land lying fallow or growing alternative crops would be about double that under cane.

The following towns are dependent mainly on sugar crops, Bundaberg, Childers, Mackay, Ingham, Ayr, Geraldton, Cairns, Port Douglas, Maryborough. To illustrate the value of the sugar industry to these towns, Mackay may be taken as example. The total exports from Mackay during the ten years from 1881 to 1890 were 2,788,231*l.*; of this amount, sugar constituted 2,524,479*l.*, molasses 56*l.*, rum 9140*l.*, and the whole of the remaining exports only 254,556*l.* The average price of raw sugars of 88 per cent. net titre, f.o.b. at Queensland, from 1895 to 1900 (including bonus of about 2*l.* per ton), was 9*l.* 5*s.* 5*d.*, while the value of refined sugars without the duty was 16*l.* 3*s.* 7*d.* The value of the crop for 1900 was 920,913*l.*, and the average value from 1897–1900 was 1,076,318*l.* 15*s.* 9*d.*

The greater expansion of sugar production in Queensland will depend upon placing a greater number of cane growers upon the sugar-producing areas. Reduced acreages in the hands of the individual settlers will render more thorough cultivation of the ground, and care of the crop, and a consequent larger yield per acre possible. The constant cropping during several years without planting or manuring has seriously reduced the yield. In the Herbert River lands, where small growers used to obtain 40 tons of cane per acre, the yield is reduced to 16 and 12 tons. In North Mackay, some parts give only 4 and 5 tons, although the average for Queensland is about 15 tons to the acre. The impoverishment of the soil by repeated cropping is indicated by the results in the following table:—

Constituents	Virgin Soil	Cropped Soil	Loss per cent.
	lb. per acre	lb. per acre	
Lime	3747	2538	37·2
Potash	747	432	42·2
Nitrogen	4650	3240	31·0

Queensland.—Sugar production and export :-

Year	Area of Cane crushed	Area under Cane	Sugar made	Total Export	Yield of Sugar per acre
	Acres	Acres	Tons	Tons	Tons
1864	..	93	..	..	..
1870	2,188	6,341	2,854	..	1·30
1880	12,306	20,224	15,564	7,560	1·26
1890	39,435	50,922	69,983	40,680	1·77
1891	36,821	50,948	51,219	40,934	1·39
1892	40,572	55,520	61,368	38,524	1·51
1893	43,670	59,251	76,146	52,528	1·74
1894	49,839	71,818	91,712	64,910	1·84
1895	55,771	77,247	86,255	67,205	1·55
1896	66,640	83,093	100,774	75,375	1·51
1897	65,432	98,641	97,916	62,417	1·50
1898	82,391	111,012	163,734	123,057	1·99
1899	79,435	110,657	123,289	109,045	1·55
1900	72,651	108,535	92,554	62,842	1·27
1901	78,160	112,031	120,808	70,625	1·55
1902	59,102	85,338	76,626	71,294	1·30
1903	60,375	111,516	91,828	54,096	1·52
1905	96,093	134,107	152,722	..	1·59
1906	98,194	133,284	184,377	..	1·88

Over 95 per cent. of the total exports of sugar go to other Australian colonies.

New South Wales.—The official records of the state show that in 1864, 2 acres of sugar cane were grown in New South Wales. In 1870 the area had grown to 3917 acres ; in 1880, 3675 acres were crushed ; in 1890, 7348 acres, and in 1898, 14,578 acres. The average sugar yield per acre, from 1895 to 1899, was 1·76 ton per acre. The production of cane in New South Wales in 1899 was 170,509 tons, or 18 tons per acre, while Queeensland produced 1,176,466 tons, or 14·8 tons per acre. The cane area is the banks and elevations of the Tweed, Richmond, and Clarence rivers. South of the Clarence river night frosts render the cultivation less profitable, so that it is chiefly confined to the small angle of the state to the north of this river.

85 per cent. of the imports and 60 per cent. of the exports are from or to other Australian colonies.

Year	Area under cane	Area of Cane crushed	Cane Yield	Sugar made	Imports	Exports
	Acres	Acres	Tons	Tons	Tons	Tons
1888	15,281	..	110,218	12,632	..	..
1890	20,446	..	277,252	19,016	..	..
1894	32,909	..	264,254	22,637	46,449	7,304
1895	32,927	14,398	207,771	22,213	36,425	5,181
1896	31,053	18,194	320,276	28,557	38,493	4,599
1897	25,865	12,936	269,068	27,653	40,018	5,339
1898	24,759	14,578	274,206	29,110	61,303	17,279
1899	22,517	9,435	170,509	15,352	61,257	20,031
1900	22,114	..	199,118	19,938	..	11,228
1901	20,809	..	187,711	19,518	..	..
1902	20,301	..	215,442	21,544	..	..
1903	20,219	..	217,859	21,785	..	..
1905	21,805	10,313	201,998	19,985	..	..
1906	20,601	10,378	221,560	23,418	..	..

Australia.—Sugar beet. The question of the cultivation of beetroot has received a good deal of attention in Victoria for the last thirty-five years, and experiments were made on the Government farms and by private growers. The results obtained were so satisfactory that it was thought the industry would be established on a permanent basis. 64 samples of beet grown on experimental farms during 1893–4 yielded 18·10 per cent. of sugar, while roots grown privately were said to contain 22·5 per cent. of sugar. In 1896 the Victorian Parliament decided to assist in the establishment of the beet industry by the grant of loans. A company was formed, and a factory erected at Maffra at a cost of 17,200*l.* The first campaign ended in June 1898, and the cultivation was persevered in till May 1900, when the factory was closed down. The principal cause of failure appears to have been the insufficiency of roots, since 9000 tons was the greatest quantity treated in a campaign by a factory which was capable of dealing with 40,000 tons. In New South Wales portions of the soil have been proved to be admirably adapted to the cultivation of beet, but no systematic effort has yet been made towards the establishment of the beetroot industry on a commercial basis.

Argentine Republic.—The sugar industry in Argentine is of recent development, the area under cultivation of cane for 1872 having been a little over 6000 acres, which was increased by 1885 to nearly 50,000 acres. During the last twenty years the cultivation of the sugar cane and the production of sugar have developed at a more rapid rate, the industry being concentrated in the provinces of Tucuman, Chaco, Formosa, Salta and Juguy. The cane crop of 1898 yielded 66,000 tons of raw sugar in the province of Tucuman, and 6000 tons (estimated) in all the other provinces, and in the following year it amounted altogether to 90,000 tons. The excise duty on sugar is 6 centavos per kilo, and 25 per cent. of the crop may be exported with a bounty of 16 centavos per kilo.

Owing to the high import duty, the imports of foreign sugar have been decreasing, especially during the last seven years. In 1886 they amounted to 16,272 tons, and in 1900 to 410 tons, the exports in the latter year being 13,634 tons. Without the bounty the exports would cease, as the Argentine cane, owing to the cooler climate of the country, is not so rich as canes grown in more tropical centres. The cost of production of sugar is estimated at between 1¾*d.* and 2¾*d.* per lb., according to the method of extraction and the sugar content of the canes. The *Revista Azucarera* gives the following particulars :—

Year	Production.	Imports	
		Refined	Raw
	Tons	Tons	Tons
1901	158,154	270,705	..
1902	123,081	155,246	306
1903	142,895	131,652	301
1904	128,104	145,960	1178
1905	137,302		
1906	116,000		

Austria-Hungary.—After Germany, Austria-Hungary is

at present the most important sugar-producing country in Europe, the figures for 1903–1904 showing a total production of, 1,116,500 metric tons of sugar, of which fully half found its way to foreign markets. Practical attempts to grow the sugar beet were first made about 1830, and owing to the fostering attitude of the government, the industry developed quickly and steadily. About 45 per cent. of the sugar beet area falls to the share of Bohemia, about 30 per cent. to Moravia, and 25 per cent. to Hungary. During the period 1884 to 1904 the number of factories in operation decreased from 229 to 215, whereas the average output of raw sugar increased from 2851 to 5193 tons. The total quantity of beets used in the factories was 5,660,000 tons in 1884–1885, and 7,756,000 tons in 1903–1904, the yield of roots per acre being 8·7 tons for the first period and 10·2 tons for the second, the sugar content of the beet increasing in the same period from 11·66 per cent. to 14·39 per cent. These figures compare favourably with the best yields of German beets, and they indicate improved methods of cultivation as well as effective methods of extraction in the sugar factory.

The imports of foreign sugar are exceedingly low, since the import duty amounts to 30 crowns on raw and 40 crowns on refined sugar, and the excise tax on domestic refined to 26 crowns, the surtax on foreign refined sugar thus being 14 crowns per 100 kilos. The growing exports fostered by the return of the tax, resulted for the year 1875–1876 in a net deficit to the Treasury, the industry, instead of proving a source of revenue, had become an actual charge on its fiscal resources. The Government therefore, in 1888, abolished the law assessing the tax on the basis of an estimated yield, and adopted instead a tax on the actual sugar entering domestic consumption, and in order to protect the interests of the export trade, provided for a direct bounty, and fixed the maximum amount thereof. If at the end of the year the bounties paid exceeded the maximum provided by law, the excess

payments had to be made up by the sugar manufacturers. The export bounty on refined sugar being fixed at a higher figure than that on raw sugar, the exports of the former developed at a higher rate than those of unrefined sugar. The exports of refined increased from 146,560 metric tons in 1888–1889 to 639,722 tons for the year 1902–1903. The exports of raw, on the other hand, show a decided decrease. In 1888–1889 the raw sugar exports constituted 44 per cent. of the total exports, in 1902–1903 only 14·5 per cent. Between 45 and 50 per cent. of the sugar exported may be said to go to the United Kingdom. Among the other countries to which Austrian sugar is sent are chiefly Turkey, the Balkan States, Switzerland, India and Japan. Large exports to India commenced in 1897, when the shipments amounted to 40,947 tons, this quantity increasing in 1901 to 132,370 tons, notwithstanding the countervailing duty imposed by the Indian Government.

In addition to the export bounty and the consumption duty, the Austrian consumer has to bear another indirect contribution—that levied by the Cartel. This institution is based on the following combination: By means of the prohibitive customs tariff, the customs duty is 22 crowns per 100 kilos. The refiners artificially raise the price of refined for home consumption, and divide with the raw sugar producers, according to a fixed limit, the surplus thus realised. The following table shows the action of the Cartel :—

—	1895	March 1898	Oct. 1899	Oct. 1900	Oct. 1901
	Crowns	Crowns	Crowns	Crowns	Crowns
Crushed free at Trieste for export ..	28·48	27·00	27·50	27·50	22·50
Export bounty	4·60	4·60	4·60	4·60	4·60
Duty	22·00	26·00	38·00	38·00	38·00
Normal prices for consumption	55·08	57·60	70·10	70·10	65·10
Actual ,, ,, ...	57·42	70·50	82·50	83·00	83·00
Artificial increase in price	2·34	12·90	12·40	12·90	17·90

It is seen that before the existence of the Syndicate the Austrian refiners sold the crushed for home consumption at a price 2·34 crowns per 100 kilos over the normal price corresponding with the quotation for export, whereas, since the action of the Cartel was in force, they have in 1901 increased the extra price to 17·90 crowns per 100 kilos. The Cartel bounty and the State bounty afford an easy explanation of the increase in recent years of the export of Austrian refined sugar.

PRODUCTION OF SUGAR.

1 Hectare = 2·471 acres. 1 Metric ton = 1000 kilos = 2204·6 lb.

Year	Factories in Operation	Beet Area cultivated	Beets used in the Factories	Yield per Hectare		Sugar Yield of the Beet	Raw Sugar Production		Beets worked per Factory
				Beets	Sugar		Total	Average per Factory	
	No.	Hectares	Metric tons	Kilos	Kilos	Per cent.	Metric tons	Metric tons	Metric tons
1884–5	229	261,000	5,600,000	21,500	2,500	11·66	652,000	2,851	24,400
1890–1	213	298,600	6,866,000	23,000	2,571	11·18	767,465	3,603	32,200
1895–6	216	289,000	5,756,400	19,900	2,700	13·50	781,036	3,610	26,700
1898–9	214	310,000	7,611,500	24,710	3,382	13·70	1,041,769	4,890	35,560
1899–1900	213	325,000	8,484,300	26,100	3,380	12·09	1,098,551	5,150	39,620
1900–1	213	339,000	7,407,800	21,800	3,195	14·60	1,083,328	5,090	34,200
1901–2	216	362,000	8,945,000	24,700	3,567	14·40	1,291,100	5,977	41,400
1902–3	216	306,000	7,136,000	23,300	3,434	14·70	1,050,900	4,865	33,000
1903–4	215	309,000	7,756,000	25,200	3,750	14·39	1,116,500	5,193	36,100
1904–5	206	321,000	6,207,000	19,300	2,803	14·49	900,700	4,372	30,100
1905–6	206	371,500	9,681,000	26,060	4,026	15·45	1,495,500	7,260	47,000
1906–7	206	342,100	8,950,000	26,160	3,900	14·91	1,334,100	6,476	43,450

The exports in 1902–3 were about 66 per cent. and in 1903–4 about 54 per cent. of the production, the consumption per head of the population having increased from 7·5 kilos in 1892–3, to 10·7 kilos in 1903–4. Of the exports in 1888–9 54·4 per cent. were refined sugar; in 1903–4, 89·4 per cent.

Belgium.—Belgium although one of the minor European countries produces and exports a very considerable quantity of beetroot sugar which finds its way chiefly to the English market. Owing to the mode of sugar taxation adopted (the

tax being based on the density of the juice worked up in the factory) it is difficult to state the exact quantity of sugar produced. Some idea of the development of the industry since 1843 may be gathered from the growth of the number of factories. For the eight years ending 1850 they averaged 26, in the next decade 51, and in the ten years ending 1880 they averaged 162. Since then the number has decreased considerably there being only 113 in operation in 1903–4, the decrease being due both to factories giving up and uniting to form larger concerns. The estimated production of sugar (which does not include the tax-free excesses) shows a constant growth, the output per hectare increasing, particularly during the last twenty years. The average output for the decade ending 1870 is given as 31,142 metric tons, or 321 tons per factory; in 1870–80 the average output was 66,936 tons; in 1880–90, 100,034 tons; and in 1890–1900, 202,147 tons. These are the figures on which the sugar tax was paid, but the Belgium Minister of Finance admitted in 1898 that they were considerably underestimated, probably to the extent of 20 per cent. The presumptive yield at that time was 1900 grm. of sugar per each hectolitre and degree of clarified juice, whereas the actual yield was stated to be between 2250 and 2500 grm. Such an underestimate of the actual yield enabled the manufacturers to collect a considerable bounty on exportation, but at the same time it led to lack of interest in the production of rich roots. The exports both of raw and refined sugar show a large growth especially since 1880 when they consisted of 100,000 metric tons of raw sugar; in 1900 the exports were 247,998 tons of raw, and 52,759 tons of refined sugar.

The sugar exported from Belgium is chiefly raw as the higher bounty on refined in the case of Germany and Austria does not seem to hold true in the case of Belgium. There are only 25 refining establishments in Belgium, and the refiners having a syndicate organisation are in perfect control of the domestic market. While in 1902 the consumption was about

8·5 kilos per head of the population, in consequence of the reduction of duty from 51 to 20 francs per 100 kilos the consumption increased in 1904 to 12 kilos per head. This increase will help to compensate the decrease in exports with the withdrawal of the fostering bounties. The exports in 1900 were about 300,000 tons and had fallen in 1902 to 125,000 tons. In 1901, 95,818 tons of sugar of the value of 778,808*l* were exported to the United Kingdom. The exports amounted in 1905 to 94,225 tons of raw and 43,714 tons of refined sugar, against 130,031 tons of raw and 54,922 tons of refined in 1904. Although the last crop of sugar was considered to be 25 per cent. better than that of 1904, from increased acreage and improved yield of roots, the season ended with losses on the part of most factories, and the sugar makers propose to combine to lower the price of roots during next season.

PRODUCTION OF SUGAR.

1 Hectare = 2·471 acres. 1 Metric ton = 1000 kilos = 2204 6 lb.

Year	Factories in Operation	Beet area cultivated	Beets used in the Factories	Yield per Hectare		Sugar Yield of the Beet	Raw Sugar production		Beets worked per Factory
				Beets	Sugar		Total	Average per Factory	
	No.	Hectares	Metric tons	Kilos	Kilos	Per cent.	Metric tons	Metric tons	Metric tons
1893–4	124	57,000	2,050,000	34,200	3,840	11·12	228,000	1,840	16,532
1894–5	124	70,794	2,278,000	32,200	3,500	10·88	347,000	1,990	18,370
1895–6	123	58,588	1,758,000	30,000	3,790	12·62	221,000	1,800	14,243
1896–7	123	71,370	2,339,000	32,700	3,930	12·01	280,000	2,280	19,016
1897–8	123	55,180	1,778,000	32,200	4,230	13·22	234,000	1,900	14,455
1898–9	123	53,455	1,496,000	27,900	3,900	14·02	209,000	1,700	12,162
1899–1900	123	59,990	1,979,000	32,900	4,500	13·70	270,000	2,200	16,089
1900–1	121	71,710	2,463,000	34,400	4,520	13·00	320,000	2,650	20,355
1901–2	121	69,600	2,506,000	36,000	4,670	13·00	325,000	2,690	20,710
1902–3	113	52,300	1,441,000	27,500	3,920	14·30	206,000	1,820	12,752
1903–4	113	59,300	1,546,000	26,000	3,320	12·93	199,200	1,760	13,681
1904–5	103	45,000	1,181,000	26,200	3,800	14·51	171,300	1,660	11,466
1905–6	92	71,390	2,355,000	33,000	4,590	13·92	327,800	3,560	25,600
1906–7	83	60,300	1,849,000	30,600	4,680	15·25	282,000	3,400	22,280

Brazil.—The beginning of the sugar industry in Brazil

dates back to the fifteenth century, the cultivation of the sugar cane having been first tried by Portuguese settlers about the year 1435. For some time, until about the beginning of the eighteenth century, Brazilian sugar dominated the European markets, and was a source of great revenue to the Portuguese government. With the extension of sugar culture to the West Indies, the importance of Brazil in the international sugar market decreased, although the government fostered the development of the industry. As late as 1875, the government guaranteed interest on capital invested in the erection of central factories, so that sugar machinery of modern construction began to be introduced into the country. As a rule, however, the primitive method of extraction prevails, so that the normal sugar yield does not exceed 5 or 6 per cent. of the weight of cane. The principal sugar district is Pernambuco, where soil and climate seem to be peculiarly adapted to the raising of the sugar cane. The cultivation of cane is carefully attended to in the province, deep ploughing and the use of fertilisers being the general rule. Other sugar producing provinces are Rio de Janeiro, São Paulo, Bahia, Alagoas, Parahiba, Ceará and Rio Grande del Norte. The abolition of slavery together with the fall of sugar prices in 1884, seriously affected the progress of the industry. The following description applies primarily to the sugar industry in the Pernambuco district, but it is applicable with minor alterations to that of Brazil generally. Brazilian sugar is manufactured from the sugar-cane, either (1) by the antiquated open pan system or process (called in Pernambuco "bangue"), or (2) by more or less modernised factories.

There are some 1500 old-process factories or "bangues," and 34 or 40 "usinas," but their methods are still primitive in the extreme and wasteful; nearly all should have begass furnaces and new crushers. A very small percentage of sugar is extracted from the cane (from 7 to 9·5 per cent. in Pernambuco). One factory works the diffusion process, and enormous

quantities of wood are necessary to keep it going. The usinas are situated in valleys of easy access, raise their own canes or buy canes from neighbouring plantations. The canes are paid for on a sliding scale, sometimes based on price of "usina" sugar, that is the very first quality produced, some times on that of white crystals. The "usinas" make the ordinary centrifugal sugars from brown to white, the whites are turned into what is locally termed, for want of a better name, "usina" sugars—a white lumpy quality which goes into direct consumption in many parts of Brazil, and is much liked.

In Maceio this quality is not made, and "usina" there is a general name for all sugars produced in modern factories. "Usinas" find their way chiefly to Rio Grande do Sul, Para, and the Amazon valley, as far as Manaos, and even farther up the tributaries of the Amazon, and they, as well as white crystals, are also sold to Rio and Santos. Brown or yellow centrifugals are, in this market, called "Demeraras," from the circumstance that they were at first supposed to resemble or imitate Demerara sugars. Originally "Demeraras" were crystals, for export, about 14 D.S. in colour, testing 96° and corresponding in foreign markets, such as the United States and the United Kingdom, to 96° centrifugals. Some "usinas" make very light coloured second and third runnings, which, according to colour and dryness, find their way to the southern markets and go into direct consumption, in many cases in competition with "muscovado" sugars, which they somewhat resemble.

Bangues or Open-Pan Sugars.—After canes are ground, the juice is run into large open kettles or pans, and boiled to a point, the molasses again run into clay or metal conical moulds which are fitted with an outlet below, at first closed. After several days, eight as a rule, the outlet is opened and the molasses is run out, and the sugar bagged and sent to town for sale as wet or "mellado" sugar ("bruto mellado"). The

sugar is liable to losses in weight of 10 to 20 per cent., and to obviate this, and also to meet the demand from the south, the raw sugar is dried in the sun, and shipped south as dried "brutos" or "bruto secco." This quality is much liked by a certain class of people in Rio and Santos. The loss by sun-drying varies from 5 to even 10 per cent. according to quality. The sun-dried "brutos" are also used when roasting coffee; in the opinion of many the coffee is thereby much improved.

The raw "bruto" sugar from the pan is also run into a mould, the outlet being closed, and the sugar is covered with clay on which water is poured daily, and allowed to percolate through the clay and sugar, the water being renewed every day or two. When ready, the clay is removed and the sugar turned out, the molasses having been previously run off. The layers of sugar are separated according to the colour, and classified as white, "semenos," and "mascovado." There are regular classifications of each quality, the whites or "brancos" being known as 3*a*, of which there are three grades, *boa*, *regular* and *baixo*—that is, good, average and low. The "semenos" are similarly graded, and "mascovado" also. These gradations of colour are not very clearly defined, no two plantations making the same sugar.

Retames.—"Retames" or "channels" are sugars made from molasses, and not from cane juice directly. All these sugars are marketed in Recife and sold in small lots to packers, who collect and classify them, making them into uniform grades to suit the various markets, the best sugars going to Rio Grande do Sul or the Amazon ports. The "bangues" are often situated at considerable distances from the railway stations, and have to send their sugar to the stations on the backs of horses, sometimes a distance of half a day, or even two days' journey. The cost of marketing sugar in this way is high, but the country is extremely hilly and not adapted for the erection of large central factories. The valleys are able to supply canes

for only moderate-sized factories. Unless the crops are very small and only sufficient for the home trade the price is regulated by the value abroad. Only one refinery, in the modern sense, exists in Brazil, situated in Rio. The others, which are on the smallest possible scale, refine by the crudest methods, such as bullock's blood and animal charcoal.

The total production of sugar in Brazil at the present time is calculated at about 4,500,000 bags of 60 kilos each; the estimated home consumption is about two thirds of this, the remaining third being available for export, but as there is no official record kept, the statistics can only deal with sugars exported coastwise from the various states.

Willett and Gray give the following figures of the crops for recent years:—

Year	Tons	Year	Tons
1894–5	275,000	1900–1	190,000
1895–6	225,000	1901–2	345,000
1896–7	210,000	1902–3	187,500
1897–8	200,478	1903–4	197,000
1898–9	154,495	1904–5	190,000
1899–1900	192,700		

The exports of sugar to foreign countries in 1900 were 31,060 tons, and in the first four months only of 1901, 50,900 tons. There is no bounty on sugar exported, but, on the contrary, it is subject to an export duty of 6¾ per cent. of its gross value.

The price paid for the cane is determined, under a sliding scale, by the market price of sugar. At the standard price when "usinas" are quoted at the rate of 20 milreis (21*s.* 6*d.*) per 100 kilos, the price paid to the planters is 6500 reis (9*s.* 3*d.*) per 1000 kilos. In Pernambuco a ton of cane is reckoned to produce a large bag of 75 kilos of sugar, but actually ranges from 75 to 90 kilos. Adding the cost of milling we get for the cost of cane and milling 8360 reis per 75 kilos for usina, 7900

for crystals, 7850 for Demeraras, and 7350 for bangues. Before these sugars can be marketed, the cost of transport from the factory to the port of Pernambuco (estimated at 1500 reis per 75 kilos) must be added. Even then the cost of production appears to be only 9860 reis per 75 kilos of usina sugar, or 14*s.* 0½*d.* per 100 kilos, when the price of such sugar is 28*s.* 6*d.* But no allowance has been made, and no figures, unfortunately, are available with regard to State and municipal taxation, interest on capital (either fixed or floating), administration, maintenance of property or depreciation. In the state of Rio de Janeiro administration and maintenance are estimated at 2200 to 2500 reis, or 3*s.* 1½*d.* to 3*s.* 6¾*d.* per ton of cane milled.

Chili.—The attempt to introduce the cultivation of the sugar beetroot appears to have failed. A factory in Membrillo in 1900 worked up 55 tons of beetroots, and produced only about 4¾ tons of sugar. With the founding of two large refineries with foreign capital, the imports of raw sugar from Peru and Colombia show a steady increase while the imports of refined sugar from Europe and the United States are gradually diminishing. In 1892 the imports of refined sugar amounted to 17,876 tons and in 1899 to 3059 tons. The total imports for 1892 were 29,419 tons, in 1899, 40,837 tons, and in 1902, 44,000 tons. The total cane-sugar production was 31,022 tons in 1900, and 37,561 tons in 1906.

China.—The cultivation of the sugar cane and the manufacture of sugar attract considerable attention from the inhabitants. There has recently been a falling off in the exports, probably owing to the unsettled state of things in the north, the value having dropped from 142,000*l.* in 1899 to 82,000*l.* in 1901, and apparently it will be a long time before the lower classes who are impoverished by the war will be in a position to afford what to them is more or less a luxury.

The following method of cultivating the sugar cane is employed by the Chinese. When the canes are cut, the tops

are removed and bound in bundles, the leaves are removed, and the cuttings, which usually have four or five joints, are placed in a pond of fresh water, and after soaking for about twenty days when they begin to put out roots, are planted in rows about two feet apart the soil being slightly manured with bean cake. Ten months afterwards the crop is ready for cutting. The stools of the crop are fertilised with bean cake in a semi-liquid form, producing a second crop (1st ratoons), and when the soil is exceptionally rich, a third crop (2nd ratoons) is sometimes secured. If the soil is not sufficiently fertile for a third crop, the roots are removed, the land is carefully worked and manured as for the first crop, cuttings being planted every two years. The canes when cut are collected in bundles, and conveyed by men or in boats, according to the locality, to the mill or crusher, which consists of two granite cylinders about 3 feet in length by 18 in. in diameter, placed vertically, the lower ends revolving in a stone socket, the upper in a frame of wood set into granite uprights. Attached to the end of one of the cylinders is a strong wooden shaft, to the upper end of which is fixed a cross-beam or lever, and to its outer end is attached the propelling power, usually 4 or 5 small oxen. The cane is pressed between the cylinders, and the juice runs into a receptacle in the ground holding about 20 or 30 gallons, and is afterwards conveyed in buckets to the boiling pans near at hand, the crushed cane being taken away to be used as fodder or as fuel for boiling the sugar. The pans are of cast iron 4 feet in diameter and 18 inches deep, and are placed in brickwork side by side, with arches for fuel underneath.

Three kinds of sugar are manufactured, viz. rock candy, green sugar, and clayed sugar. The sugar principally exported is what is known as clayed sugar, and is made as follows: When the juice is boiled to a proper consistency, the whites of two eggs are put into each pan, to serve as a clarifier; when sufficiently boiled the syrup is run off into earthenware jars,

which are placed in rows either over trenches or empty jars. In the bottom of each jar containing the sugar is a small aperture in which is placed a wisp of straw. When the sugar has become sufficiently granulated the straw bung is slightly loosened, allowing the syrup to escape into the trench or empty jar beneath. When sufficiently drained, a thin layer of straw is placed over the sugar, and over this a layer of wet clay. The jars are then stowed away in a dry place, where they remain for 30 or 40 days. The coverings and straw bungs are then removed, and each jar will then contain three qualities of sugar, the upper part being white, the next light brown, and the bottom dark brown.

There are refineries at Hong Kong and Swatow, drawing supplies from China, Cochin China, the Philippines, Straits Settlements, Australia and Java. The imports include all kinds of sugar but chiefly brown. The exports given below are exclusive of Hong Kong :—

Year	Exports	Imports
	Tons	Tons
1891	51,532	17,271
1892	46,781	31,656
1893	43,853	92,256
1894	46,451	108,608
1895	43,172	88,309
1896	25,724	97,419
1897	31,084	136,938
1898	40,968	107,959
1899	52,759	123,739
1900	49,424	76,875
1901	49,484	152,739
1902	40,194	266,354

There are no reliable figures on the consumption of sugar in the country or on the probabie extension of the cultivation of the cane, but it is more probable that there will be an increased use of foreign sugar rather than increased exportation of home grown sugar.

The sugar production, imports and exports are :-

Year	Total Production	Imports	Exports
	Tons	Tons	Tons
1897	99,200	2,854	71,766
1898	78,600	1,875	56,770
1899	86,400	2,695	63,373
1900	96,600	5,945	52,880
1901	93,300	.	48,400
1902	96,200	..	43,900
1903	85,900	..	38,600
1904	71,700	..	..

While in 1894 England took about 75 per cent. of the exported sugar, of late years about 85 per cent. goes to the United States.

Experiments have been recently tried in cultivating the sugar beet practically on the same area devoted to the cultivation of cane, the object being to enable the factories to continue operations during a greater number of days than when only the cane had to be worked up. The results do not appear to have given satisfaction, for instead of the 30 to 40 tons of roots per hectare only 18 tons were obtained the first year and 11 tons in the second year.

Egypt.—Thanks to its favourable climate and rich soil, the country is well adapted to sugar cultivation, although the sugar content of the cane is reduced in frosty years. Thus Walter Tiemann gives a sugar content of 13·99 per cent. for 1896–7 when there was no frost, whereas in the following year when frost at the beginning of December hindered the development of the cane it was only 11·02 per cent. The yield per acre is high, and owing to the abundance of cheap labour the manufacture ought to be profitable. During the year 1899–1900, nine factories owned by the Khedive crushed 653,000 tons of cane, yielding 65,000 tons of sugar and 15,000 tons of molasses. The sugar factories of Daira Sanieh are all modern, their average capacity being 72,500 tons of cane per factory and season of 100 days. The whole domain, after being held

by a French company, has passed into the hands of an English syndicate which has rented it to the above company.

The following table shows the percentage of sugar of each grade and molasses obtained for the years 1892, 1899 and 1900 :—

Year	First Grade Sugar	Second Grade	Third Grade	Total Sugar	Molasses
1892	8·66	1·59	·44	10·69	2·31
1899	9·06	·47	·13	9·66	2·37
1900	9·44	·42	·13	9·99	2·34

France.—The production of beet-sugar on a large scale was first tried in France, and from that country the cultivation of the sugar-beet and the manufacture of sugar spread to all parts of Europe. The sugar policy of the country has been the resultant of the conflicting interests of the colonial sugar trade and those of the beet growers and manufacturers. This struggle lasted until 1884, when the two interests were granted, from a fiscal point of view, practically the same treatment. The notorious Berlin and Milan Decrees issued by Napoleon I., excluding from the European Continental markets all articles of English production and manufacture, including the products of British colonies if carried in British bottoms, and the Order in Council which established the Continental blockade, had the effect of wiping out the colonial trade with continental Europe. The price of refined sugar, during the period 1807 to 1815, rose enormously, being at an average of 1*s.* 3*d.* per lb. including duty. Such a price made the production of beet-sugar a profitable enterprise, especially as Napoleon encouraged the new industry by all means at his disposal. By the year 1812, according to official estimates, 16,758 acres producing 98,813 tons of roots, were turned over to beet culture. The downfall of Napoleon, however, caused the price of sugar to fall, and the new industry was threatened with ruin. In 1815

the duty on colonial sugar remained very high, while the domestic sugar was freed from taxation, and beet factories began to increase again, and by 1819, when colonial sugar showed a slight increase in price, the home industry became more hopeful. In the year 1825 there were about 100 sugar factories which worked on the average 140 days in the year, the average yield of sugar being 4 to 4½ per cent. against a present yield of 12 to 13 per cent., and, in Germany, a still higher yield. The estimated product in 1827–8 was 2000 tons and 5 years later 20,000 tons. A few years after this, sugar works were to be found in 55 departments, producing 49,000 tons of tax-free sugar, and it was at this juncture that the colonial trade demanded the entire suppression of the industry.

Foreign raw sugar, of colonial origin, paid a considerable surtax, while refined sugar, as a rule, was entirely barred from entry. All sugar produced in the French colonies had to be brought to France to be refined there, thus freights were secured for French shipping, and development of the industry was favoured. As a rule, the consignee paid the duty on receipt of the sugar. If the refined sugar was destined for exportation abroad, the tax was refunded to the refiners on the basis of a presumed or legal equivalent as between the raw and refined product. This practice gave rise to a bounty, as the Government, in case of doubt, favoured the refiner, who was interested in underestimating the yield. In 1835 the net revenue from sugar instead of being 50,000,000 francs, as estimated by the Government, was only 31,000,000 francs, the difference being chiefly due to the export bounties on colonial sugar. The increasing deficit being pointed out to representatives of the cane industry, the latter argued that before the development of the beet industry, such reduction of revenue would not have occurred, since the colonial product would have been consumed in France with payment of the full duty.

In 1837 a tax was imposed of 15 francs per 100 kilos of beet-sugar, but the production continued to increase, and the next year it reached 50,000,000 kilos, the production of colonial sugar being 87,000,000 kilos. A fall in price followed and in 1840 the output was reduced to 23,000,000 kilos. The revolution of 1848 caused a new disturbance in the sugar trade, one of its first acts being the abolition of slavery in the colonies, which resulted in a fall of the colonial output from 100,000,000 kilos to 15,000,000 kilos. It is interesting to note that for the decade beginning with 1870, no great progress is shown in the production of raw sugar. Thus for the year 1871–2 the total production is given at 337,000 metric tons, and 10 years later it amounted to 393,268 metric tons. In the same period the German production increased 220 per cent. In 1875, France was at the head of the sugar-producing countries: from that time Germany took the first place.

The following table shows the average percentage of sugar from French beets and the quantity of beets required for the production of each lb. of sugar :—

Year ..	1872–3	1873–4	1874–5	1875–6	1876–7	1877–8	1878–9	1879–80	1880–1
Per cent. Yield of Sugar	5·70	5·91	5·66	5·20	5·0	7·20	5·44	5·45	4·77
Lb. Beets used per lb. of Sugar	17·5	17·0	17·6	19·2	20·0	14·0	18·4	18·3	20·9

In Germany in the year 1880–1, 11·06 lb. of beet produced 1 lb. of sugar, against 20·9 lb. in France.

In France until the year 1884, the attitude of the beet-growers was directed towards attaining the maximum weight of roots from a given area, irrespective of quality, but in Germany the growers were interested in producing beets that

would furnish the maximum amount of sugar irrespective of the weight of the roots. In France, all the beetroot factories were subject to strict excise control, so that not a pound of sugar was allowed to escape taxation, whereas in Germany, the tax being on the presumed yield of sugar, the manufacturers benefited by the excess of the actual yield. In 1884 the German system was adopted by France, the estimated yield being fixed at a lower figure than that prevailing at the time for the whole of France. In the case of exportation, the full duty according to the actual yield was returned to the producer, and a bounty thus originated, which was paid also on colonial sugar sent home for refining. The effects of the new policy were soon seen in a decreased yield of beets per acre, a higher yield of sugar in the beets, and a higher price paid to the grower. In order to protect fiscal interests, the presumed yield was raised during the next six years from 6·25 per cent. to 7·75 per cent., the excess yield being subject to some taxation as well.

The tables from the French official publications, January 1901, show that the quantity of beets worked up since 1884 has increased from 4,556,796 tons to 7,394,475 tons, and the sugar production from 272,962 tons to 869,200 tons; that the primitive methods of extraction have been discarded, and that all the factories have adopted the diffusion process.

The production of sugar in France is geographically concentrated in four departments in the north-east, which contains 84 per cent. of all the sugar factories, manufacturing 71 per cent. of the total sugar outturn.

When in 1896 the German Government established a direct bounty on export sugar, the French Government followed suit by granting a direct bounty of 3.50 francs and 4.50 francs per 100 kilos according to the grade of the sugar exported, the outlay being defrayed by a new tax of 4 francs per 100

kilos refined and 1 franc per 100 kilos of raw sugar, it being stipulated that the direct bounty should not exceed the total amount yielded by the new tax.

The French industry is at present dependent on the British market. About 90 per cent. of its raw and 50 per cent. of its refined product find their way to England.

The profits of the French refiners are exceedingly high; a report to the shareholders of the largest refining concern in France, with a capital of 32,000,000 francs, shows a profit of 16·3 per cent.

There is perhaps no other country where the difference between the domestic and export price of sugar is so marked as in France. There does not appear to be any agreement among refiners respecting prices, but arrangements are made from time to time regulating the output.

Year	Export Prices White No. 3 in Bond Francs per 100 kilos.	Domestic Prices Refined Loaf, "belle sorte," Francs per 100 kilos.
1895	28.62	99.53
1896	30.45	100.88
1897	26.79	96.69
1898	31.17	103.29
1890	31.89	105.11
1900	30.90	104.43
1901	26.08	100.33
1902	22.22	94.43
1903	25.67	81.93
1904	29.18	61.40

With the reduction of the duty there has been thus a notable reduction in the domestic price and a consequent increase in the amount consumed per head of the population from 12·6 kilos refined in 1903 to 15·8 kilos in 1904.

The imports of sugar from the French colonies, which constituted almost the whole of the imported sugar, amounted in 1903 to 125,802 tons, and in 1904 to 76,839 tons. The exports of raw sugar for the same periods were 70,827 and 135,801 tons, and the refined, 142,452 and 137,942.

PRODUCTION OF SUGAR.

Year	Factories in Operation	Beet Area Cultivated	Beets used in the Factories	Yield per Hectare		Sugar Yield of the Beet	Raw Sugar Production		Beets worked per Factory
				Beets	Sugar		Total	Average per Factory	
	No.	Hectares	Metric tons	Kilos	Kilos	Per cent.	Metric tons	Metric tons	Metric tons
1881–2	486	..	4,528,678	..	..	8·23	372,862	767	9,318
1885–6	413	112,000	3,385,439	29,400	2620	8·40	285,216	690	8,197
1891–2	368	..	5,628,804	..	..	10·94	616,203	1674	15,416
1892–3	368	..	5,472,891	..	..	10·13	554,768	1507	14,872
1893–4	370	..	5,230,020	..	..	10·48	548,198	1481	14,135
1894–5	368	241,500	7,137,737	29,500	3090	10·47	747,989	2033	19,342
1895–6	367	204,600	5,411,484	26,400	3220	12·18	659,606	1797	14,745
1896–7	358	246,207	6,765,000	27,400	3010	10·85	742,827	2075	18,900
1897–8	344	231,050	6,402,058	27,700	3510	12·67	811,185	2358	18,610
1898–9	344	237,169	6,105,615	25,700	3290	12·77	781,975	2273	17,749
1899–1900	339	265,684	7,394,476	27,800	3450	12·42	918,533	2709	21,813
1900–1	334	302,366	8,717,439	28,800	3630	12·54	1,100,171	3294	26,100
1901–2	332	312,465	9,350,851	29,900	3550	11·86	1,109,700	3343	28,165
1902–3	319	248,685	6,266,946	25,200	3310	13·06	823,600	2582	19,646
1903–4	292	236,874	6,505,000	27,500	3350	12·21	794,500	2721	22,311
1904–5	275	189,090	4,513,600	23,800	3150	13·24	597,600	2173	16,413
1905–6	292	276,331	8,415,800	30,456	4094	12·78	984,672	3372	28,821
1906–7	273	207,170	5,475,400	26,430	3658	13·42	682,851	2501	20,056

Germany.—Germany is at present the leading sugar-producing country of the world, India and perhaps China excepted. Its present commanding position is of recent date, the total amount of raw sugar produced not exceeding 100,000 tons until the year 1860, whereas the present production is about 2,000,000 tons a year. This phenomenal growth has been achieved by improvements in the production of the sugar-beet, the processes used for the extraction of the juice and the refining processes.

The discovery of sugar in the beet was made by a German chemist Marggraf in 1747, but no practical results followed until 50 years afterwards, when Achard succeeded in extracting sugar from the beet on a comparatively large scale. In 1812 a manufactory was in operation in Silesia, in which about 20 quintals of beet were worked up daily, producing

about 100 lb. of raw sugar. The enterprise was successful for a time, but with the downfall of Napoleon and the opening of European ports to colonial sugar, the manufacture had to be abandoned, and was not reintroduced till the end of the second and the beginning of the third decade of the nineteenth century. Figures for the year 1836–7 show the number of 122 factories, which obtained a total of 1408 tons of raw sugar from 25,346 tons of beet. In 1840–1, 145 factories are reported as having worked 241,486 tons of roots, yielding 14,205 tons of raw sugar.

As in France, the beet industry, during its early stages of development was free from taxation, imported cane sugar at the time being subject to a duty of 54 to 60 marks per 100 kilos. In 1841 a revenue tax was first imposed on the domestic product, the assessment being made upon the quantity of roots used. This tax amounted in 1851 to 0·60 mark per 100 kilos of beet used in the factory; two years afterwards the tax was doubled, and in 1859 it was raised to 1.50 mark. It was not till 1861 that the Government permitted the return of the duty on exported sugar, fixing the rates at 16.40 and 20 marks for raw and refined respectively. The beet tax reached the maximum of 1.70 mark in 1886–7, while the drawback increased to 18.80 marks in 1870, the highest rate ever reached.

As early as 1867, it was asserted that the payment of drawbacks resulted in a bounty to the German manufacturers, but M. Dureau calculates that, with the exception of two seasons, there was no bounty till after 1876–7. It cannot therefore be said that the progress of the German industry was due primarily to the bounty policy of the Government.

From Saxony and Silesia, the original sites of sugar cultivation, the industry spread to other parts of Germany, and the distribution of sugar factories is shown by the following table :—

Year	Number of Factories in						Total Number of Factories
	Saxony Province	Silesia	Hanover	Brunswick	Anhalt	All other	
1865–6	142	40	3	24	36	51	296
1870–1	141	41	8	25	35	53	303
1875–6	143	48	11	38	34	58	332
1880–1	137	47	30	30	31	58	333
1885–6	126	57	44	32	28	112	399
1890–1	126	59	44	32	29	113	403
1895–6	119	57	44	32	27	118	397
1899–1900	116	59	43	32	24	125	399
1902–3	112	56	43	33	24	126	394

For the whole of Germany, the average yield of roots per acre shows a slight decrease but this apparent deterioration is more than compensated by the improved quality of the beet as measured by its sugar content. The yield of roots is at present about 12·2 metric tons per acre. The percentage yield of sugar from the beets has increased from 9·04 in 1880–1, to 15·40 in 1903–4. While in 1880–1, 13·37 lb. of beet were required to produce 1 lb. of sugar; in 1885–6 the corresponding equivalent was but 8·75 lb., in 1890–1, 8·27 lb., in 1895–6, 7·63 lb., in 1899–1900, 7·37 lb. How much of the improvement is due to better agricultural methods, and how much to improvements in the factory is difficult to determine.

Another factor which has resulted in the improvement of the raw material is that at an early period the cultivation of the beet became subject to the control of the factory. Land owned or leased by the factory and by the shareholders, produces from 40 to 50 per cent. of the raw material, so that the factory is in a position to control the cultivation of the beets by selecting roots which yield the highest amount of sugar. During the year 1899–1900, 6,617,377 tons of roots, or 53·2 per cent. of the total quantity were supplied by private growers in the open market at 19·10 marks per metric ton

or 4 to 5 marks less than the price paid by the French manufacturer.

The growth of German exports proceeded at a very rapid rate. From 56,121 metric tons in 1875–6, they increased to 134,216 tons in 1879–80. The year 1880–1 shows 283,848 tons exported, the year 1884–5, 673,727 tons, the year 1889–90, 744,146 tons. In the year 1894–5 over a million tons were exported, and the total in 1896–7 reached 1,237,520 tons, the domestic consumption, in the same year, amounting to 505,078 tons. The increasing exports soon became a source of loss to the German Treasury. The amount paid in the form of bounties to the exporters of sugar, from 2,230,833*l.* in 1882, reached 6,369,166*l.* in 1885, leaving for the latter year but 1,931,250*l.* net revenue from the sugar tax.

The fear of a constantly vanishing revenue prompted the Government to reorganise its system of taxing sugar. The law of July 9, 1887, introduced a new tax on the actual amount of sugar entering home consumption, and reduced at the same time the old beet tax by more than 50 per cent. In 1892–3 the beet tax was entirely abolished, and the consumption tax raised from 12 to 18 marks per 100 kilos of sugar. The law of May 27, 1896, fixed the tax at 20 marks per 100 kilos. The indirect export bounties were at first reduced, and in 1891 superseded by direct bounties. The "contingent" principle was introduced in 1896, the purpose of which was to limit exportation by limiting production. The effect of this policy is seen by the reduction of the export figures of 1899–1900 by over 20 per cent. below those of 1896–7.

In the three years immediately preceding the Brussels convention, the consumption was approximately stationary, with an enormous increase in 1903–4 and a subsequent decrease due to rise of price of sugar. The coming into force of the convention was attended by a decrease of the exports which is continued during the following year, partly due to the bad harvest of beets.

—	1900–1	1901–2	1902–3	1903–4	1904–5
	Metric tons				
Consumption ..	773,968	743,520	809,812	1,130,326	959,607
Export—Raw ..	533,771	517,274	453,622	419,023	285,448
Refined	610,479	699,212	725,457	454,600	481,072
Total	1,144,250	1,216,486	1,179,079	873,623	766,520

Great Britain and the United States may be said to receive over 90 per cent. of the total raw sugar exported from Germany, the remainder going to Norway, Sweden, Switzerland, Denmark and Holland. As regards shipments of refined sugars, by far the largest part goes to the United Kingdom. Japan and the East Indies also take large quantities.

Mr. George Martineau calculates the cost of producing German sugar at not much less than 10*l.* per ton.

With the view of putting the sugar industry into a satisfactory condition, in 1890 a syndicate of the sugar refiners was formed, which guaranteed to the producers of raw sugar a certain minimum price whenever the inland market price falls below a determined level. This inland normal price has been fixed at 12.75 marks per centner of 50 kilos. The amount to be paid by the refiner to the producer is determined by the average monthly price in the Magdeburg market. Every month the refiners, the white sugar manufacturers, and the producers from molasses pay over to the syndicate of refiners the difference between the inland normal price and the world market price plus 10 per cent. This is distributed among the producers of raw sugar in proportion to the amount of production allowed them by the tax authorities. In return for this compensation paid them by the refiners, the raw sugar factories agree to produce no refined sugar for inland consumption, and to sell raw sugar and molasses to the syndicate only. The compensation per centner of raw is limited to 3.40 marks, and if the world's market price goes up to the fixed normal

price, the combination has no effect to further increase the price.

Competition practically disappears through the combination, and a fixed inland price is maintained as under:—

	Marks
1. Raw sugar price	12.75
2. Margin between raw and refined sugar	4.00
3. Combination advantage for refineries	.50
4. Consumption tax	10.00
	27.25

This price would remain fixed as long as the world's market price did not exceed 12.75 marks, nor fall below 9.35 marks. In the former case the combination would cease to be effective, and in the latter case the inland price would fall correspondingly below 27.25 marks.

The home consumer really maintains the industry by paying a high price for his sugar under the above conditions.

The new scale of customs and excise duties which came into force under the Brussels convention on Sept. 1, 1903, involved considerable reductions all round. The excise duty was reduced from 20 to 14 marks per double centner. The customs duty on imported sugar was reduced from 40 to 14 marks plus the surtax of 4.40 to 4.80 marks. The export premiums have naturally been discontinued; these, it is calculated, have amounted in the aggregate since 1876 to 60,000,000*l.* These changes result in a loss of revenue of 1,500,000*l.* to 2,000,000*l.* per annum. How far this loss to the Imperial Exchequer will be recouped by an increase in the consumption of sugar it is too early to judge, owing to the the abnormal conditions prevailing up to the present.

The amount of sugar consumed per head of the population increased from 10·38 kilos in 1890–1, to 13·67 kilos in 1900–1; the amounts for the five years following were 12·97, 13·88, 19·13, 16·0, and 18·4 kilos respectively.

PRODUCTION OF SUGAR.

Year	Factories in Operation	Beet Area cultivated	Beets used in the Factories	Yield per Hectare		Sugar Yield of the Beet	Raw Sugar Production		Beets worked per Factory
				Beets	Sugar		Total	Average per Factory	
	No.	Hectares	Metric tons	Kilos	Kilos	Per cent.	Metric tons	Metric tons	Metric tons
1836–7	122	..	25,346	..	..	5·55	1,408	11·5	208
1875–6	332	..	4,161,284	..	..	8·60	358,048	1078	12,534
1879–80	328	..	4,805,261	..	..	8·52	409,415	1248	14,650
1880–1	333	..	6,322,203	..	..	8·79	555,915	1670	18,690
1884–5	408	..	10,402,688	..	..	10·79	1,123,030	2752	25,497
1889–90	400	..	9,825,039	..	..	12·36	1,213,689	3034	24,563
1894–5	396	441,441	14,521,029	32,900	4000	12·15	1,766,805	4461	36,669
1896–7	399	424,881	13,741,601	32,300	4092	12·66	1,738,885	4358	34,390
1897–8	402	437,174	13,697,892	31,300	4015	12·79	1,755,229	4366	34,074
1898–9	402	426,458	12,150,642	28,500	3815	13·37	1,627,072	4047	30,225
1899–1900	399	426,732	12,439,301	29,200	3963	13·58	1,691,258	4238	31,176
1900–1	395	447,606	13,253,909	29,600	4188	14·14	1,874,715	4746	33,554
1901–2	395	478,749	16,012,867	33,400	4809	14·37	2,302,264	5828	40,539
1902–3	393	427,644	11,257,683	26,400	4184	15·87	1,789,170	4552	28,687
1903–4	384	415,856	12,706,527	30,500	4731	15·40	1,967,500	5124	38,400
1904–5	374	416,714	10,071,211	24,200	3607	14·92	1,503,036	4018	26,928
1905–6	376	468,474	15,726,425	33,600	4935	14·70	2,311,746	6148	41,825
1906–7	369	446,963	14,186,536	31,700	5010	15·01	2,239,179	6068	38,446

British Guiana.—The area under sugar-cane cultivation in British Guiana in 1903 was 75,288 acres, the area in Demerara being greater than the combined areas in Essequibo and Berbice. The number of sugar estates is 64, and of these 57 have more than 500 acres each in cultivation. The capital invested is estimated by the Planters' Association at 10,000,000*l.* The export of sugar in 1895–6 was 100,160 tons, of the value of 1,046,160*l.* This gives 1½ ton of sugar, and an average value per acre of 15*l.* 6*s.* The highest export was in 1887, when it reached 134,876 tons of the value of 1,778,638*l.* The export in 1904 was 113,282 tons.

The sugar industry is carried on with considerable energy and intelligence, and British Guiana takes its place among the most progressive of the cane-producing countries, but the available area is limited to the low-lying marshes on the coast

where the sea has to be kept out by dykes. It is estimated that cane-sugar of high quality can be produced almost as cheaply as in most tropical countries, but it is handicapped in having to maintain an expensive system of artificial drainage, and in being so largely dependent for its labour on coolie immigration. Each coolie costs about 17*l.* to bring in and 12*l.* 10*s.* to send home, and he must also receive regular wages at a prescribed rate. In 1891 we find that 71,771 coolies were employed in the sugar trade, and only 18,721 of other races.

The cost of production of sugar has been largely reduced in late years. In 1883–4 the cost was 16*l.* 1*s.* 7*d.* per ton, in 1895–6 was 9*l.* a ton, viz. 4*l.* 15*s.* for manufacture and 4*l.* 5*s.* for cultivation. The saving has been effected by the introduction of improved machinery and by carrying on operations on a larger scale under technical supervision. The total amount expended on machinery in the colony during 18 years was 1,339,000*l.* Wages have been reduced during past years 20 to 25 per cent., and the cost of living is rather less than formerly. The average yield of sugar throughout the colony is about 9 per cent. of the weight of the cane; in 1903 the yield per acre was 1·65 ton of sugar. It is evident that with present prices the margin of profit is reduced to a minimum, and that no provision can be made for bad seasons or other unfavourable conditions.

Holland.—Owing to the fact that Holland imported the entire production of the East Indian Islands under its rule, the beginning of beet cultivation there is of more recent date than in other European countries. The average number of hectares devoted to beet cultivation for five years ending 1870 was 6580. The area was more than doubled in 1880, in 1900, it was 46,465 hectares, and in 1904–5, 35,856 hectares. The average yield of beet per hectare was 21·8 metric tons in 1903–4; the total quantity of beets worked in 1903–4 was 879,873 tons, and the raw sugar produced, 123,000 tons.

The price paid per ton of beets is about 16*s.* 8*d.*, or about

the same as in Germany. Until 1889–90 the total production never exceeded 45,000 tons, but beginning with that year the production, notwithstanding the gradual rise of taxation, shows considerable growth, the highest figures being in 1901–2, when 203,000 tons of raw sugar were produced.

The sugar refined in Holland is at present made up of domestic and imported beet sugar, and very small quantities of cane sugar, Dutch East Indian sugar finding its way to Great Britain, the United States, and other countries, but very little to Holland (1360 tons in 1900).

During the year 1900, out of 206,536 tons refined, only 38,773 tons were from imported beet sugar. In the same year, out of 16,859 tons of raw exported, 16,211 tons were shipped to the United Kingdom, and out of 117,816 tons of refined exported, 107,268 tons were exported to the same country.

Java.—The cultivation of the sugar cane was established in the island at a very early period, and the industry has shown considerable growth during the last twenty years; from 218,000 tons in 1880, the total production in 1900 had reached the figure of 710,000 tons, and in 1905, 975,000 tons. In 1830 Governor General Van den Bosch introduced his famous culture system, under which the natives were compelled to cultivate cane on part of their land, and the Government contracted with the Chinese and European manufacturers for the erection of sugar factories and the manufacture of sugar from the cane grown under its control. The result has been that the cultivation of such plants as coffee, indigo, sugar, pepper, tobacco, cotton, hemp, etc., was introduced in a short time, and Java assumed the character of an immense Crown domain employing 800,000 families. In 1861, the Government decreed that only one-fifth of the land in the hands of the natives should be used for the production of sugar, so as not to dispossess the natives from the land needed for the cultivation of food stuffs. In 1870, a law was passed which regulated the relations between sugar contractors and the Government.

The state was to supervise and control only the cultivation of the cane and pay the wages of the field labourers; the cutting, conveyance to the factory, etc., were left to private undertakers who were permitted to dispose of the product, beginning with the crop of 1872.

The development of the industry is largely due to favourable economic conditions, labour being abundant, good and cheap; to excellent technical direction leading to improvement in extraction and production; to rich cane and high yields, the fields being worked almost as market gardens.

The yield averages over 9000 kilos of sugar per hectare (3·6 tons per acre), the percentage of sugar in the cane being 10 per cent. Only one crop is taken as the land can usually only be rented for the season, the canes being cut as a rule 12 months after planting. Crushing takes place from May to November.

Java, notwithstanding its population of 28 millions, consumes but a small proportion of the sugar it produces, the great bulk being exported to the United States, China, Japan, Australia and the Straits Settlements. The total exports for three years were in 1903, 734,581 tons; in 1904, 834,248 tons; and in 1905, 819,723 tons.

Mexico.—Ever since the introduction of sugar into Mexico by the Spanish conquerors, the quantity produced has been considerable, but partly owing to its poorer quality it has served for domestic consumption only. The cultivation of the cane is carried on in many parts of the country, but not in the north or in the highlands. The productions are crystallised sugar, next panela or panocha, a dark brown mass grained by stirring, and containing much syrup, and lastly molasses which is used exclusively for making rum. The great bulk of the sugar is produced in the four states, Morelos, Jalisco, Puebla, and Vera Cruz. In Morelos, the rainfall is so moderate that irrigation is necessary. The industry is carried on exclusively on large estates. Repeated ploughing, irrigating, and using

stable manure are the rule, resulting in a yield of between 30 and 40 tons of cane per acre for plant canes, and considerably less for the second harvest. The yield seldom reaches 9 per cent., and the cost of transport to the sea is high being practically as costly as the freight from Vera Cruz to Europe. The methods of manufacture are mostly primitive, but modern factories have recently been established. In the low lying coast regions where irrigation is not needed, the unhealthiness of the climate and the scarcity and indifferent quality of the labour hinder the development of the industry.

Until quite recently exports about equalled the imports, and only reached a few hundred tons. The Hacienda Mexicana gives the exports for 1903–4 as 15,000 tons, about 85 per cent. of the exports come to the United Kingdom. The production increased from 50,000 tons in 1898–9 to 157,000 tons in 1904–5.

Natal.—Sugar has a history in Natal similar to that of most other cane-growing countries. The pioneers in 1850 had neither the practical knowledge requisite nor the necessary capital. At first the planters thought that only flat lands were suitable, now the bulk of the crop is grown on hill lands. The first steam mill was introduced in 1877 at Mount Edgecombe by planters from Mauritius. At the end of 1904 there were 33,000 acres under cane, and 34 central factories in operation, half a dozen of the larger mills crushing 100 to 300 tons of cane per day of twelve hours, and equipped with up to date machinery. The planting season is from September to November, the first crop is ready about 21 months after planting, and generally three crops are taken. First crops on good land are calculated to give at least 2½ tons of sugar per acre, and succeeding crops not less than 1½ ton, but the yield varies greatly in dry seasons. The sugar is largely exported to the other South African colonies.

The Pacific Islands. Fiji.—Both climate and soil are well adapted for sugar cane. The soil in most places is a rich

alluvium on the banks of the rivers, loam on gentle slopes or hillocks, and volcanic soil of the richest kind. While in 1875, when the islands came under the English flag, only 153 tons of sugar could be exported; the export ten years later had risen to 10,685 tons, and production and export have continued to increase. In 1903 there were 33,000 acres under cane, the export was 46,438 tons. In Viti Levu are the three principal mills of the Colonial Sugar Refining Co., of Sydney, including the huge plant at Lautoka, one of the largest mills in the world. There is another mill at Labusa in Vanua Levu. The mills of 9 and even 12 rollers are reported to have saved 20 per cent. in juice extraction. Crushers and hot water maceration are also used. Most of the sugar goes to Auckland, New South Wales, and Victoria for refining. The disinclination of the islanders for work has led to the introduction of coolies from near Calcutta. These come under contract for five years, and are paid at the rate of 25*s.* for a man, and 20*s.* for a woman per month.

Hawaii.—The sugar industry began to take root in the Hawaiian islands about 1830; in 1850 the mills in use were only the old Asiatic ones with rolls of wood and stone and the yield of sugar was scarcely 1 ton per acre. A reciprocity treaty in 1875 between the Hawaiian Kingdom and the United States admitted the sugar free into American ports, and as the labour laws of Hawaii then favoured the entry of Asiatic labourers so that cheap sugar could be produced, a great development of the sugar industry followed with the investment of many millions of American money in large plantations. The export of sugar rose from 11,000 tons in 1875 to 28,000 tons in 1880 and 125,000 tons in 1890. Then the temporary abolition of the duty on sugar produced a great reverse, but the Dingley Bill re-introduced a duty on sugar while that from the island was allowed in free. This change and the subsequent annexation gave the industry a fixity which it maintains to the present time. The chief difficulties to further

development are the great expense incurred through the necessity of pumping water, often from great depths, for irrigating the rainless side of the islands, an area comprising two-thirds to three-fourths of the sugar area, the high cost of fertilisers necessary to produce the heavy crops required and the scarcity of labour which now threatens, the entry of Asiatic labour being discouraged in order to Americanise the country.

Plant canes take 18–24 months to ripen, after which 1, 2 or occasionally 3 ratoons are taken, but it is usual, in order to obtain high yields, to keep so much under plant canes that only $\frac{1}{3}$ to $\frac{1}{4}$ of the acreage is under ratoons. If a ratoon field is not deemed capable of giving 30 tons of cane (equal to 3 or 4 tons of sugar) per acre, it is torn up and plant cane set out. The cane is worked up in factories of the most up to date construction on the largest scale with no spare of American and English capital. The average yield is 4 to 5 tons of sugar per acre, but the Ewa plantation has given results equal to 15 tons of sugar per acre of cane. When, however, it is considered that the land is under preparation and cultivation for three years before the crop is obtained, it is obvious that the yield per acre under cane is not so disproportionate from the yields from beetroot. The expenses on the cultivation alone reach the enormous figure of 290 dollars per acre without including cost of pumping plant, implements and maintenance of roads. The cost per ton of sugar obtained is for plant canes $24\frac{3}{4}$ dollars, for first ratoons 22 dollars, and for second and third ratoons 20 dollars. In 1902 the season lasted 198 days, the average yield of sugar being 12·73 per cent. For the same year the Honolulu Plantation Co., with 1600 acres of plant canes, 700 acres of long ratoons, and 643 acres of short ratoons, obtained a crop of 20,000 tons with a yield of 10·48 per cent. of sugar.

There are 53 sugar plantations in the islands, viz. Hawaii 25, Kauai 11, Oahu 9, Maui 8. Owing to the ravages of the

leaf hopper and fungus diseases the 1904 crop was 70,516 tons less than in 1903, when 437,991 tons were produced. The amount of cane grown under irrigation is increasing.

	1904	1905
Under irrigation	244,610	299,843
Without ,, ...	122,865	126,405
Total (short tons) ..	367,475	426,248

Peru.—Peru is one of the most favoured countries for sugar production, rivalling even the dry lands of Hawaii, and sugar forms the staple export, amounting in 1905 to 134,000 tons valued at about 1,500,000*l.* The cane crop is a tolerably reliable one, although occasionally it suffers from drought, and the great bulk of the sugar is now grown under irrigation from the rivers. As these vary with the season and the flood waters are allowed to run to waste, there is need for conservation of the water. Artesian wells have been sunk near Lima to give a good flow, but until vast irrigation works are undertaken by the government there is little to stimulate the expansion of the acreage under cultivation. The industry has been hitherto greatly restricted by the want of suitable labourers, but recently it has been arranged to draw labourers from the mountains under contract, and bind them to work by putting them under the debtors' laws by advanced payments. The best season for planting is November, the first planting taking 15 months to mature; afterwards the ratoons ripen in 12 months. The time spent in the manufacture is 8 months, but grinding may be continued all the year through, and one mill worked for 6 years continuously. Cane is cultivated on both sides of the Andes, but the Pacific slope of northern Peru is the great sugar district, the plantations on the eastern slope being used principally for the production of rum. Good estates produce 4·5 tons of sugar per acre. The canes generally contain 13 to 16 per cent. of sugar and 12 to 16·5 per cent. of fibre; the juice is generally of high density,

high sugar content and good purity, being from 23° to 20° Brix, and 21 to 18 per cent. sucrose. The total production is about 140,000 tons per annum, most of which is exported. The principal countries to which it is exported are Chili, the United Kingdom and the United States. The exports to the United Kingdom were, in 1905, 56,886 tons, and in 1906, 26,856 tons.

The Philippine Islands.—Sugar cane is grown in Luzon, Panay, Cebu, Negros and nearly every part of the Archipelago. With good soil, a favourable climate and cheap labour, the country only needs exploiting to develop its resources. With an area double that of Java, which can produce a million tons of sugar per annum, it held second place among Asiatic sugar-producing countries in the world's market until the outbreak of the Spanish-American war. In 1893 the total sugar exported exceeded 250,000 tons; this was exported to England, the United States and Canada, China and Japan. The industry, however, is still in an antiquated state, and the method of manufacture most primitive 60 per cent. only of the juice is extracted and the sugar produced contains not more than 50 per cent. of extractible pure sugar. Only about 1¼ ton of crude sugar are obtained per acre. Willett and Gray give the following particulars as to exports (tons of 2240 lb.):—

Calendar Years	Great Britain	Europe	Japan	United States	Hong Kong	China	Total
1893	101,440	3,343	..	78,771	77,983		261,537
1898	42,228	..	..	32,547	103,572		178,347
1899	8,298	..	30,983	22,105	28,224		89,610
1900	13,248	..	14,622	2,100	32,723		62,693
1904	4,350	..	14,666	20,893	28,554	16,402	84,865
1905	8,160	..	4,156	35,270	37,749	15,896	101,231

Russia.—The first sugar factory in Russia was established in the province of Tula about the beginning of the 19th century, and by 1841 the production reached 6450 tons a year,

or about 15 per cent. of the total consumption of the country. By the year 1855–6 about 400 factories were working, the annual production being about 13,000 tons. These factories were of a primitive character. The abolition of serfdom was a blow to the trade, but owing to the introduction of fresh capital, the use of steam and the diffusion process, the industry assumed a more modern character, and was gradually transferred to the more southern parts of the empire, where the conditions of soil and climate were more favourable for the cultivation of beetroot. About two-thirds of the 270 factories were located in the provinces of Volhynia, Podolia and Kiev. In 1880–1 the government abolished the system of taxing the product on the basis of a presumptive output, and taxed instead the product on entering the market. Ever since 1885–6 attempts were made by the Russian sugar manufacturers to organise the industry so as to control the price of sugar in the home market, and a syndicate was formed. The leading principle of the combination may be said to be the right of every manufacturer to produce sugar at will, subject to one essential condition, that all the excess over and above the normal quantities be exported abroad. The syndicate agreements were renewed from time to time until the year 1895, when the government undertook to regulate the industry, adopting the leading features of the former voluntary organisation. The form of the sugar tax allows high prices to be secured in the home markets while the exported over-production gets no direct bounty but a drawback. The industry has lost considerably by this arrangement, but only on the exports to the west of Europe and America; the exports to the east, principally Persia, having no competition can command high prices. While the price for home consumption has steadily risen, the price of export sugar has continued to fall, so that the relative prices of home and export sugar at Kiev in 1899 were 4·46 and 1·26 roubles per pood respectively. Notwithstanding the high price in Russia, the consumption per head

has continued to increase, amounting in 1896–1900 to an average of 4·10 kilos per head. The extension of railways and of other means of communication helps to render Russia more and more independent of the world's market, and its reliance on inland consumption more secure.

In the campaign of 1905–6 there were 277 factories in operation, and 875,717 tons of sugar were produced, exceeding the output of 1904–5 by 36,989 tons. The area under cultivation was 1,324,540 acres, an increase of 141,224 acres on the previous season. The roots produced were 7,780,287 tons, an increase of 391,545 tons, and equal to a yield of 117½ cwt. to the acre. The quantity of sugar supplied for consumption was 542,603 tons refined and 292,429 tons of white crystals. The quantities exported during the past three years were :—

	1903	1904	1905
Tons exported	236,673	170,243	97,234

Beetroot Sugar Production in Europe.—The following particulars for the past three years are given by the Association of Sugar Manufacturers :—

Country	Area under Cultivation in 1000 Acres			Production of Sugar in 1000 Tons		
	1903	1904	1905	1903	1904	1905
Germany	1047	1036	1168	1708	1350	1873
Austria-Hungary ..	778	808	935	1026	798	1173
France	590	476	621	703	529	865
Russia	1348	1183	1325	1016	839	876
Belgium	149	113	173	180	152	281
Other countries ..	296	274	325	365	303	365
Total	4208	3890	4547	4998	3971	5433

Spain.—The cultivation of the sugar cane in Spain dates from the time of the Moorish conquest. As early as 1150 the industry had developed so far that 1200 tons of sugar were produced, and by the 15th century double this amount. Spain is the only cane-sugar country in Europe. The main develop-

ment of the cultivation is in Andalusia from Almeria to Gibraltar along the coast where, sheltered from the north winds by a chain of mountains, the temperature is high and there is an absence of frost. The yield reaches to from 18 to 20 tons of cane per acre in favoured plantations, and the cane contains from 13 to 15 per cent. of sugar. The canes are planted in double rows about March and are ripe the following March. They fetch 30 to 40 pesetas (24 to 32*s.*) per ton delivered at the factory, and the cultivation is most remunerative. Irrigation is indispensable during the dry season, which lasts for 3 or 4 months, and proper manuring is essential. The production in 1904 was 136,000 tons gross weight.

The beet sugar industry is a growth of recent years. In 1886 there were two beet sugar factories near Granada and Cordova; in 1889–90 the number had increased to 11. During the period up to 1903, owing to the prohibitive duty imposed on imported sugar, the number of factories had increased to 47 with a possible output (including the 25,000 tons from cane) of 175,000 tons of sugar and therefore far exceeding the consumption, which was estimated at 85,000 to 90,000 tons. An amalgamation of the factories was formed under the title of the Sociedad General Azucarera de España to prevent the ruin of the industry. This syndicate monopolised the production of sugar and its sale, and reduced the number of factories in operation.

	1883	1892	1902
Imports of raw sugar in tons ..	44,525	76,488	64

	1899	1900	1901	1902	1903	1904
Production of beet sugar in tons	32,984	60,703	59,509	67,343	87,978	65,844

United Kingdom.—No sugar is at present produced in the United Kingdom, but beet sugar was made in considerable quantities for several seasons at Lavenham, Suffolk, some years since by Mr. James Duncan. The principal difficulty experienced was in getting the farmers to grow sufficient beet

for a fair season's working, and there seems to be no good reason why the industry should not be carried on successfully, if English growers could be placed in the same position as those of other powers under the Brussels Convention and were granted a surtax of 2*s.* 6*d.* a cwt.

All the sugar consumed in the country is imported, and since 1874 Great Britain has become the sugar market of the world. The enormous growth of sugar production, chiefly of beet sugar, resulted in a corresponding fall of prices which made possible the marvellous growth of consumption in Great Britain, especially during the last quarter of the nineteenth century. The price decreased from about 59*s.* 5*d.* per cwt. in the beginning of the century, to 9*s.* per cwt. towards its close, and the consumption per head increased in the same period from about 20 lb. to about 90 lb. In 1874 the Government abolished the duty, but in 1901 imposed an import duty of 4*s.* 2*d.* per cwt. This apparently has had no effect on the consumption. As far as Great Britain is concerned the enormous increase in the consumption of sugar preceded the latest development of the beet-sugar industry; and another fact that stands clearly forth is that the growth of consumption corresponded with the fall of price. The period beginning with 1875 and ending with 1900 marks the era of duty-free sugar, and a fall in price from about 20*s.* per cwt. to about 10*s.* per cwt. This fall is due to the growth of the beet-sugar industry and the European bounty policy, which enabled the British refiner to buy sugar, at times, below the cost of production.

Imports of Cane and Beet Sugar.—The most important fact regarding British imports of sugar is the decrease of cane-sugar and the corresponding increase of beet. In 1870 the import of cane-sugar constituted about 77 per cent. of the total importations, but in 1900 the share of cane decreased to a little over 9 per cent. Comparing the import figures for 1875 and 1900 it is seen, from the table (p. 828), that the imports of cane decreased about 570,000 tons, whereas the

ALTERATION IN DUTIES ON SUGAR PER CWT. FROM 1863 TO THE PRESENT TIME.

1863		1864–1866		1867–1869		1870–1872	1873	1874	1880	1901	
	s. d.		s. d.		s. d.	s. d.	s. d.				s. d.
Refined	18 4		12 10		12 0	6 0	3 0	Duties abolished except on brewing sugar	Duty on brewing sugar abolished	98% polarisation	4 2
White clayed	16 0		11 8	1st class	11 3	5 8	2 10			All other degrees according to polarisation down to 76	2 0
Brown ,,	13 10	1st class	10 6	2nd ,,	10 6	5 3	2 8				
		2nd ,,	9 4	3rd ,,	9 7	4 9	2 5			Syrup	2 9 to 2 0
Below ..	12 8		8 2	4th ,,	8 0	4 0	2 0				
Cane price	10 4										
Molasses	8 0						0 10			Molasses	1 0

imports of beet sugar, raw and refined, grew from 235,000 tons to 1,473,000 tons.

Sugar Imports (in 1000 tons) :—

Year	Raw Cane	Raw Beet	Refined Cane	Refined Beet	Total	Per cent. Raw
1870	556	84	3	82	725	88·3
1875	705	107	16	128	956	84·9
1880	590	260	11	140	1001	84·9
1885	561	410	(a) 114	152	1237	78·5
1890	283	503	(a) 15	484	1285	61·2
1895	388	463	1	706	1558	54·6
1900	150	512	1	961	1624	40·8
1905	280	453	1	734	1468	50·1
1906	198	564	1	905	1668	45·7

(*a*) Mostly from the United States.

The largest increase in importations is in refined sugar, almost exclusively from beet sugar, the quota from Germany forming the preponderating amount, while France, which formerly sent by far the largest proportion of refined, shows scarcely any change. The increase in imports of refined sugar is partly due to the higher bounty accorded by European Governments on the refined product. This policy affected unfavourably the British refineries and resulted in the closing of a number of them.

The following figures giving the exports of British refined sugar show a gradually decreasing importance of the British

refined industry in the world market down to 1901 with a recent tendency to increase:—

Year	Tons	Year	Tons
1875	48,613	1900	30,313
1880	48,272	1901	22,815
1885	49,718	1902	35,830
1890	35,472	1903	51,460
1895	48,311	1904	29,453
1898	36,802	1905	32,370
1899	32,378	1906	44,867

In 1884, according to Mr. Mayson M. Beeton, the British refineries turned out 842,778 tons of sugar, or about 84 per cent. of the total consumption. In 1896 the output had fallen to 631,797 tons, or about 40 per cent. of the total consumption. In 1884, 8 refineries were in full work in London, in 1896 there were only 2. In Liverpool, out of 10 refineries in operation in 1884, 5 had ceased to exist in 1896. In Greenock 9 refineries were working in 1884, and only 4 in 1896. In Bristol the out-

CONSUMPTION OF SUGAR IN THE UNITED KINGDOM.

Year	Raw	Refined	Total	Per Head		Price of Raw, per cwt.	Price of Refined per cwt.
				Raw	Refined		
	Tons	Tons	Tons	lb.	lb.	£ s. d.	£ s. d.
1872	585,296	88,286	673,582	41·18	6·19	1 6 11	1 17 7
1875	740,381	129,732	870,113	50·64	8·88	1 1 2	1 10 4
1880	786,127	145,542	931,669	51·09	9·46	1 1 9	1 9 3
1885	899,599	255,475	1,155,074	55·46	15·75	13 10	18 2
1890	717,394	472,239	1,189,633	42·87	28·22	12 6	16 4
1895	790,718	700,159	1,490,877	45·28	40·10	9 7	13 4
1896	721,262	731,739	1,453,001	40·94	41·53	10 5	13 7
1897	613,706	780,784	1,394,490	34·52	43·92	9 0	12 3
1898	715,706	812,525	1,528,231	39·89	45·29	9 8	12 5
1899	645,023	881,310	1,526,333	35·63	48·68	10 6	12 7
1900	647,939	953,736	1,601,675	35·48	52·23	10 5	12 10
1901	In terms of refined sugar		1,596,538	..	86·07	9 1	11 11
1902			1,506,916	..	80·45	7 2	10 3
1903			1,493,798	..	78·97	8 5	10 6
1904			1,535,324	..	80·37	10 1	12 1
1905			1,388,042	..	71·94	10 8	14 7
1906			1,582,453	..	81·19	8 10	11 5

put of refined sugar in 1884 had been 44,000 tons, whereas in 1896, only one refinery was in existence with an output of 15,000 tons.

The United States of America.—Besides cane and beet sugar, the United States produces maple, melon and, until recently, sorghum sugar. The sugar cane was introduced into Louisiana in the year 1751, but it was not until 1794–1796 that the first crop of sugar large enough to affect the future of the trade was made by Etienne de Bore, the price realised being 12,000 dollars. A number of planters followed Mr. Bore's example and erected sugar houses, and the industry continued to grow until 1820, when the Creole and Tahiti canes were supplanted by the present variety, the Purple or Red Ribbon cane; the latter being able to withstand greater cold, the planters were able to increase their area by extending the plantations further north. The following table shows the development of the cane industry in Louisiana and other southern states :—

	Year	Sugar Produced	Molasses Produced
		Tons	Gallons
	1852–3	172,456	26,960,000
	1853–4	234,444	32,956,000
Average of 8 years ..	1854–62	145,922	21,102,292
,, 10 ,, ..	1862–72	38,490	5,408,754
,, 10 ,, ..	1872–82	81,773	12,728,496
,, 10 ,, ..	1882–92	144,458	20,322,122
	1892–3	206,816	21,527,997
	1893–4	272,690	26,908,726
	1894–5	325,621	37,617,074
	1895–6	242,693	27,232,957
	1896–7	287,578	27,707,057
	1897–8	316,050	29,335,144
	1898–9	248,954	30,272,414
	1899–1900	149,191	21,820,976
	1900–1	273,230	37,563,790
	1901–2	325,391	31,407,862
	1902–3	332,949	37,285,723
	1903–4	217,606	27,964,292
	1904–5	350,000	..

Development of the Beet-Sugar Industry.—The beginning of the industry in the country dates from 1862, and two years

afterwards a small factory at Alvarado near San Francisco was consuming 80 tons of beetroots per day. The largest factories now in operation are in California, and at Binghamton, near New York, a yield of from 10 to 12 tons of beets per acre has been obtained, the farmers receiving 5 dollars a ton for them. The cost of production varies from 20 dollars to 45 dollars per acre. A state bounty of two cents per lb. was granted on sugar produced from beets. The industry has grown rapidly in the last few years; from 80,000 tons in 1900 to 209,000 tons in 1904–5, the output of California alone being estimated at 55,000 tons of beet sugar. The risks of beet culture are not great, but the soil has to be carefully selected, and storage of roots is expensive and hazardous. The Arkansas Valley, Colorado, is said to be an ideal sugar-producing locality, the climate being equable, the supply of water for irrigation ample, fuel cheap, and an unlimited extent of suitable land available. The beets are grown by farmers under contract with the factory and paid for according to sugar content. In 1904–5, there were 48 beet factories in the United States; of these Michigan had 27 with an area of 98,000 acres under beet, California 7, with an area of 71,000 acres, Utah 6, Colorado 5, and Nebraska 3. These are equipped with good machinery and have obtained the best beetroot seed procurable, but labour is dearer than in Germany and other continental countries, and the long distances from harbours and the protective tariff keep the prices high in spite of low railway rates and the abundance of limestone and coal or oil.

Results of the beet-sugar crops for 1901 and 1905:—

1901

—	—	Beets per Acre	Sugar Produced	Sugar in Beet	Purity	Refined Sugar per Acre
	Acres	Tons	Tons	Per cent.		lb.
California ..	57,979	11·09	72,000	15·9	80·8	2482
Michigan ..	59,949	8·47	53,100	14·2	82·8	1772
Colorado ..	19,669	9·79	43,700	17·1	83·0	2410
Utah	12,506	11·45	15,300	14·0	82·9	2455

1905

—	—	Beets per Acre	Sugar Produced	Sugar in Beet	Purity	Refined Sugar per Acre
California ..	51,857	9·92	74,000	17·27	81·33	2854
Michigan ..	85,916	10·19	91,600	14·71	87·79	2132
Colorado ..	77,823	6·83	66,500	15·65	84·67	1709
Utah	27,750	8·02	24,200	14·03	80·85	1744

Quantity and value of beet and cane sugars imported :-

Year	Beet Sugar	Value	Cane Sugar	Value
	Tons	£	Tons	£
1900	313,187	3,083,460	1,480,602	17,802,160
1901	405,662	4,589,286	1,368,894	14,262,339
1902	113,853	875,426	1,239,681	10,595,635
1903	39,344	254,796	1,869,633	14,763,740
1904	1,078	10,526	1,650,986	14,971,923
1905	99,975	999,433	1,543,299	19,343,369

The total consumption of sugar in 1878 was 773,472 tons, or 36·2 lb. per head of the population; in 1880, the figures were 956,784 tons and 42·7 lb.; in 1890, 1,476,377 tons and 52·8 lb. The following table gives the details of consumption in recent years :—

Year	Refined Sugar from Foreign Raw	Domestic Supply					Total	Consumption per Head
		From Imported Molasses	Cane Sugar	Maple Sugar	Beet Sugar	Sorghum		
	Tons	Tons	Tons	Tons	Tons	Tons	Tons	lb.
1896	1,670,963	603	243,220	5,000	40,000	300	1,960,086	62·5
1897	1,715,607	150	310,537	5,000	39,684	..	2,070,978	64·8
1898	1,708,937	1,700	252,812	5,000	34,453	..	2,002,902	61·5
1899	1,844,642	5,200	160,400	5,000	62,826	..	2,078,068	62·6
1900	1,950,014	7,647	174,450	5,000	82,736	..	2,219,847	65·2
1901	1,932,330	17,977	292,150	5,000	124,859	..	2,372,316	68·7
1902	2,092,657	23,600	296,000	5,325	148,526	..	2,568,108	72·8
1903	1,982,605	21,525	292,800	5,150	247,563	..	2,549,643	70·9
1904	2,246,068	15,310	323,649	12,000	170,135	..	2,767,162	75·3
1905	2,056,092	11,880	333,522	9,000	220,722	..	2,632,216	70·5

Uruguay.—Lying below the 30th parallel of latitude it is not possible to grow cane for producing sugar, but only for direct consumption and the manufacture of rum. The area of 71,700 square miles consists of soil suitable for the growth of fruit, grain and vegetables, but is chiefly devoted to pasturage. Sugar refineries have recently been established and considerable tracts of land laid down under beet for supplying them, particularly in the department of Maldonado, but little progress appears to have been made although favouring bounties have been offered by the Government. The imports of sugar (principally from the Argentine Republic, France and Germany) for the years 1891, 1901, and 1902, amounted to 12,496 tons, 18,693 tons and 19,600 tons respectively.

Sugar in the British West Indies.—The sugar problem in the West Indies, which has long been a topic of public discussion is not of recent origin. Beginning with 1834, when the Emancipation of Slaves Act was passed at a cost to the United Kingdom of 16,500,000*l.* for partial compensation, there has been keen and continuous agitation on the part of the planters. A recent phase of this agitation resulted in the institution in 1896 of the West India Royal Commission of Inquiry. As the direct result of their recommendations, the Imperial Department of Agriculture was formed, and supported by Imperial funds; improved steamer accommodation was provided between Canada and the West Indies, and a subsidy granted for fruit-carrying steamers between Jamaica and England. The great protection afforded by the United States to Louisiana, Hawaii, Porto Rico, Cuba, and the Philippines, may in a few years, extinguish the demand for British West India sugar, but Canada may soon be able to take the entire production. The great bar to the development of the sugar industry has now been removed by the abolition of the European sugar bounties. This affords no artificial advantage, but is merely a disadvantage removed. The alternatives to sugar cultivation in the introduction of sea-island cotton and the extension

of fruit growing will help to render the islands more independent of fluctuations in the staple industry, but sugar must always remain, so long as it gets fair play, the dominant industry as being most suitable to the tropical condition of the islands.

Barbados.—For the last two hundred years the sugar cane has been extensively cultivated in Barbados. The present area under cane cultivation is 74,000 acres, equal to 70 per cent. of the surface, so that the island may be regarded as one huge cane field. In 1891 there were 47,045 persons employed in the sugar industry or 25·8 per cent. of the total population. The capital invested in properties now existing is about 2,000,000*l.*, and the number of sugar estates is 440 with an average area of 168 acres. The soil is naturally fertile, but having grown sugar for so long 70,000*l.* a year has to be spent on artificial manure alone, and greensoiling with leguminous crops to supply nitrogen is necessary to keep up the yield. Canes are usually planted annually, but on the higher lands they are often ratooned. In the crushing of canes 99 only of the estates use steam power, the remainder being dependent on windmills. Muscovado sugar is produced by 434 estates, while centrifugal sugar is produced on eight estates containing 6 per cent. of the total area. The exports of sugar average about 50,000 tons per annum, and the quantity has not decreased of late years, but the collective value of sugar, rum and molasses, which reached 1,114,000*l.* in 1884 and 1,041,000*l.* in 1890, was reduced to 577,400*l.* in 1896. In 1882, 60 per cent. of the exported sugar was sent to the United Kingdom, the remainder going to the United States (17 per cent.) and Canada (22 per cent.). In 1896, 5 per cent. was sent to the United Kingdom, 93 per cent. to the United States and 2 per cent. only to Canada.

The net cost of making a ton of ordinary Barbados sugar is 8*l.* 12*s.* 2*d.* In consequence of imperfect extraction it now requires 13·6 tons of cane to produce one ton of sugar, but

with the best machinery 9·5 tons would be sufficient. The manufacture is also defective, there being a loss of 25 per cent. of the sugar contained in the juice extracted. Professor Harrison is of opinion that by the adoption of the central factory system there would be a saving of 5*s.* per ton of cane or 6*l.* 5*s.* per acre.

Production and export from Barbados :—

Year	Production	Exports		Total
		To United States and Canada	To the United Kingdom	
	Tons	Tons	Tons	Tons
1895	37,305	25,701	6356	32,806
1896	48,959	41,241	2423	44,459
1897	57,240	49,961	2296	52,740
1898	52,717	44,454	645	48,217
1899	46,097	40,239	652	41,597
1900	49,616	42,997	1555	45,513
1901	63,009	54,847	2145	58,509
1902	..	42,662	2555	46,878
1903	..	..	..	34,760
1904	..	..	..	58,081
1905	45,000	..	..	40,000

Trinidad.—The principal sugar estates border on the Gulf of Paria, and have an area of 66,480 acres, of which 33,800 acres are actually under cane, the average crop exported being 45,000 tons or 1·3 ton per acre. The total production of sugar in 1903 was 47,778 tons, which cost about 10*l.* a ton, and the capital invested is about 2,500,000*l.* With a few exceptions advantage has been taken of modern improvements in boilers, furnaces, multiple evaporators, crushing mills and other machinery. The exports in 1903 were 40,384 tons of which 16,977 tons went to America and 28,242 tons to the United Kingdom.

Tobago.—In 1862 there were 65 sugar estates in the island. In 1897 they were reduced to 38, not one half of which employed steam power. The area under cultivation of cane is estimated at 2000 acres, or 20 per cent. of the whole cultivated

area. The sugar mills are small, and only common muscovado sugar is made at a cost of 7*l.* per ton. The decline of the industry is shown by the annual value of the exports of sugar, rum, and molasses which averaged, from 1875 to 1879, 71,000*l.*, and for the year 1896 had fallen to 5109*l.*

Grenada.—The area now under sugar cane is not more than a thousand acres and only one or two estates are wholly devoted to sugar cane cultivation. The gradual extinction of the exports of sugar is shown by the following figures: the exports in 1871–1875 averaged 4248 tons, in 1891, 191 tons, and in 1896, only 13 tons.

St. Lucia.—About 6000 acres under sugar cultivation are attached to large factories, the machinery used being of modern description. There are also small estates owned and worked by peasant proprietors who sell their canes to the central factories. The cost of production is 10*l.* per ton of sugar. No notable increase in production is shown during recent years; in 1902 the production was 4278 tons of which 3051 tons went to the United States; in 1903 the production was 3884 tons.

St. Vincent.—The sugar industry in St. Vincent has been in a gradually decaying position for over 20 years. Professor Harrison states that, on the majority of the estates, the land appears to have been starved for some years, while cane diseases, due to fungi and insect pests, have been more prevalent than in any other part of the West Indies. In May 1892, St. Vincent was visited by a volcanic eruption which overwhelmed the northern part of the island, causing great destruction of life and property. It is reported that nine sugar estates were seriously damaged. The crushing power of the water-mills is deficient, and the manufacture of sugar is in a backward state, only open-pan sugar being produced. The production was in 1881–1885 an average of 7636 tons, in 1891–1895 an average of 3292 tons, in 1898, 1864 tons, in 1902, 697 tons, and in 1903, 261 tons. The exports to the United

States declined from 2459 tons in 1897 to 420 tons in 1902. Some of the larger estates are now devoted to the manufacture of rum, some of which is exported, the rest being consumed by the negro population.

Dominica.—The aggregate area under cane is less than a thousand acres, and the two mills in existence produce only muscovado sugar; the cultivation of the cane and the manufacture of its products are carried on in a primitive manner. In 1876–1880 the exports averaged 3207 tons; in 1896, 845 tons were exported, 369 tons going to the United States; in 1903 the exports had fallen to 225 tons.

Montserrat.—The area under sugar cultivation may be taken at 6000 acres. All the estates produce raw or muscovado sugar, at a loss of 30 to 50 per cent. of the sugar during manufacture. About half the usines employ steam power; the others wind or water power. The industry seemed to be in danger of extinction, but there appears to be a recovery since 1900. The exports in 1896 were 1644 tons; in 1900, 235 tons; and in 1903, 869 tons.

Antigua.—The area under cane cultivation is 15,600 acres, forming 78 estates, some of which are grouped together and worked as one. The cultivation of the land has always been attended to, but the manufacture is very backward, 13½ tons of cane being frequently required to produce a ton of sugar. The production is almost entirely raw, or muscovado, there being in 1897 only one factory provided with vacuum pans. The Antigua Central Sugar Factory, which opened in December 1904, worked up in 1905 15,860 tons of cane, with a sugar content of 10·31 per cent., and produced 1630 tons of sugar and 77,000 gallons of molasses. It thus required 9·73 tons of cane to produce 1 ton of sugar. As the factory is capable of dealing with 3000 tons of sugar per annum, but owing to the drought the cane crop was greatly reduced, it is evident, that in a normal year, sugar can be produced at this factory at a very low cost.

The exports which in 1896 were valued at 118,634*l.*, or 91 per cent. of the total exports, are shown in the following table:—

Year	Exports	Year	Exports
	Tons		Tons
1896	13,714	1900	7,662
1897	12,766	1901	9,125
1898	6,969	1902	12,611
1899	10,084	1903	10,494

St. Kitts and Nevis.—These neighbouring islands may conveniently be taken together. There are 136 sugar estates with a total area of 22,250 acres, which is about 30 per cent. of the area available for cultivation. More than one-third of the plantations are owned by absentee landlords, who do not trouble themselves to expend capital to keep their estates in an efficient condition. Nearly all the sugar produced is raw or muscovado; rum is made on only three plantations. The average cost of production of sugar is 9*l.* 11*s.* 4½*d.* per ton in St. Kitts, and 10*s.* per ton less in Nevis. The exports to the United States have declined from 11,464 tons in 1896 to 6043 tons in 1902. The total exports were 14,823 tons in 1896, and 13,490 tons in 1903.

Jamaica.—There are 140 sugar estates in Jamaica with a total area of 268,217 acres, of which 30,036 acres are in cane. The cane grown is of poor quality, and contains probably no more sugar than when first introduced in 1796. The crop is usually 12 to 15 tons per acre, and on an average 16 to 18 tons of cane are required to produce one ton of sugar, but in some estates 11 tons. By the selection of improved seedlings, improved drainage and the use of fertilisers the yield of sugar could be doubled. Canes can be grown at a cost of from 4*s.* to 5*s.* 6*d.* a ton. Steam power is employed in 95 estates, water power in 38, water and steam in 3, and cattle in 4 estates. Raw or muscovado sugar is produced in 40 estates and open-

pan centrifugal sugar in 98. Few estates employ a vacuum pan and triple effect. Rum is produced on practically all the estates, and in recent years has often been of more value than the sugar crop. There are usually produced 100 gallons of rum to 1 ton of sugar, and, according to the Planters' Association, the cost of production of both is 20*l.*, in Westmoreland it has been brought down to 15*l.* 4*s.*, and for sugar alone 7*l.* 7*s.* The exports of sugar were as follows :—

Year	Exports	Year	Exports
	Tons		Tons
1896	16,073	1900	14,750
1897	14,218	1901	20,322
1898	18,037	1903	13,524
1899	19,510		

Cuba.—Velasquez, the first lieutenant-governor of Cuba, is said to have introduced the sugar-cane in 1523. At the close of the seventeenth century there were 100 plantations on the island, with an average production of about 100 tons of sugar each. In 1817 the production had increased to 70,000 tons ; in 1830 to 90,000 tons ; in 1840 to 200,000 tons ; and in 1850 to 300,000 tons. In 1894 the output was 1,054,214 tons ; and the next year, under the first influence of the rebellion, the quantity was 50,000 tons. In 1896 the war was raging throughout the island, and the output only reached 225,221 tons.

The principal cane belt is the comparatively level strip of country extending almost round the island near the coast. The red sugar lands are derived from highly ferruginous limestone, and constitute the best sugar lands in Cuba. While this soil is very sticky, and heavy when wet, it is extremely pervious to water, drains well, and is easily worked when not freshly drenched by rain. The black sugar land occurs largely in the hilly parts, where it is underlaid by white calcareous subsoil, and in the level districts where it is under-

laid by a yellow or brown clay subsoil. The black land is heavier and more tenacious than the red, loses water more slowly, and until it is fairly well dried is difficult to work.

The cane is reproduced by cuttings, and takes about 18 months to mature. If the roots are not damaged in harvesting, the yield will continue from 5 to 25 years, gradually diminishing in amount, though the juice increases in density and in purity as the plants grow older in years. The crops yield from 12 to 50 tons per acre, and contain from 13 per cent. of sugar in December, to 18 per cent. in March and April. The grinding season lasts from December 1 to May 15, for during the rainy season from June to December the canes cannot be handled in the fields, or the ox carts used. Little manuring is done, although experiments in Matanzas Province have shown increased yields with 200 lb. sulphate of potash and 400 lb. acid phosphate per acre, from 28·73 tons to 41·08 tons, and this was further increased to 45·94 tons per acre by the application of 2000 lb. of slaked lime in addition to the above. Few fields are thoroughly cleaned, ploughed and prepared for the crop, and no irrigation works exist. Usually cane is planted in hillocks 3 feet apart in rows 5 feet apart. Of late the system of Dr. Zayas, in which the hillocks are planted 9 feet by 12 feet apart, has been strongly advocated as affording means of cultivating by machines drawn by animals and yielding a greater number of successive crops of richer cane, although giving less the first year. The principal varieties of cane grown are the crystallina, blanca, and a red or purple striped variety. Cuban cane does not suffer much from the ravages of disease, and the attacks of insects as in some other countries. But great losses are sustained annually through destructive fires. As a precautionary measure against the spread of fire, it is customary to leave lanes about 30 feet wide unplanted between the rows at distances of about 100 yards, and broader avenues at right angles to these lanes and about twice as far apart. The latter are commonly

planted with rows of plantain trees, which serve the double purpose of affording protection against the spread of fire and a very acceptable article of food in their fruit. Strangely enough, the cane itself survives the fire pretty well, being protected by its very tough siliceous rind and its abundant internal juice, but burnt cane must be cut, transported and crushed within four days or it will ferment. Should it be rained upon it will deteriorate sooner. Sugar made from it is usually dark and less desirable for refining.

In Cuba the factories usually obtain their supply of cane in part or altogether from farmers who raise it on their own land or on land belonging to the factory. These "colonos," or managers of cane farms, contract with factories to furnish cane to be paid for in raw sugar of 96°, varying in amount from 4 to 6½ per cent. of the weight of the cane as delivered to the mill. When cash is paid it is still on the same basis, calculated from the average daily quotations in the Havana market. The cane is cut by hand with broad-bladed machettas or cutlasses, stripped of all leaves and tops, cut into pieces about three feet long, and thrown into piles, whence it is picked up and carefully packed into ox carts, which transport it directly to the mill or else to the railroad, where it is loaded upon the cars either by hand or by mechanical hoists which raise the whole cartload at once. The ox carts carry from two to five tons of cane, and the railroad cars employed hold from 10 to 15 tons. Cane arriving at the factory by cart or railroad is unloaded upon the cane carrier either by hand or mechanically by a cane hoist lifting five or six tons at a time. Chains or wire ropes are pushed under the load of cane between transverse slats on the platform of the car or cart, the ends attached to the support above, and the load lifted bodily into the air, transported to a suitable hopper above the carrier, and there dropped by the pull of a trigger. In some cases, the cane is gradually discharged from the hopper upon the carrier by means of a revolving drum or travelling apron provided with

strong hook-like teeth; in other cases, the hopper is built at the bottom of a trough 6 or 7 feet wide by about half as deep, and leading up at an angle to the crusher. In the bottom of the trough is the carrier, an endless apron of wooden or metal slats or plates, or in the later models of steep ascent a link belt conveyor of great strength provided with strong steel teeth 18 inches long, curving slightly forward to elevate the tangled mass of cane which falls upon it. The mass of canes in a rough layer, 12 or 18 inches deep, falls precipitously over the upper apex of the carrier into a hopper-like receptacle, which feeds it into the preliminary crusher, consisting of two enormously strong horizontal steel rolls provided with intelocking ridges to grip, crush and tear the cane. The Krajewski crusher with zigzag serrated corrugations, appears to give the best results. The Marshall, with alternating plain rings and rings of interlocking teeth, also gives very good results, although it appears to allow of more slipping than the other. These rolls are usually 30 to 34 inches in diameter and 6 or 7 feet long. They are set an inch or two apart, and can separate still farther by pushing back against very heavy spiral steel springs. The crusher is generally driven by a separate engine and exerts a tremendous pressure upon the incoming cane. Nearly half the juice of the cane is extracted here, and the cane, torn open and often cut into short lengths, passes by a travelling conveyor to the first mill proper.

About 2,000,000 acres, or one-twentieth of the area of Cuba is under cane cultivation, which is said to be about one-fifth of the area on which cane could be suitably grown. The climate is unsurpassed for its growth and development. Improvements have been made in the mode of culture of the cane, and the manufacture of raw sugar has benefited by the use of steam power and the introduction of all kinds of machinery. Some of the plantations are to the extent of 25,000 acres, with an annual revenue of 208,000*l.*, expenses 166,000*l.*, leaving a profit of 42,000*l.*

The sugar crops from 1879 to 1905 were as follows :—

Year	Tons	Year	Tons	Year	Tons	Year	Tons
1879	670,000	1886	731,723	1893	815,894	1900	300,073
1880	530,000	1887	646,578	1894	1,054,214	1901	635,856
1881	493,000	1888	656,719	1895	1,004,264	1902	850,181
1882	595,000	1889	560,333	1896	225,221	1903	998,878
1883	460,397	1890	632,368	1897	212,051	1904	1,040,228
1884	558,937	1891	816,980	1898	305,543	1905	1,163,258
1885	631,000	1892	976,960	1899	335,668		

The loss of Cuba to Spain must be to the advantage of the former, as Spain always considered her colony as a source of income. The exports of sugar from 1893 to 1897 were as follows :—

Exported to	1893	1894	1895	1896	1897
	Tons	Tons	Tons	Tons	Tons
The United States ..	680,642	965,524	769,958	235,659	202,703
Canada	25,069	24,372	28,324	..	83
Spain	9,448	23,295	28,428	9,969	1,337
The United Kingdom..	3,045	10,528	5,674	..	..
Local consumption ..	50,000	50,000	50,000	40,000	38,000
Total	768,204	1,073,719	782,384	285,628	242,123

Porto Rico.—The cultivation of cane is mostly confined to the lower fertile land, a few miles wide, around the coast, the more mountainous parts of the interior being devoted to coffee. The rainfall is not uniform as in Cuba, the arid regions of the south and east requiring irrigation. Cultivation consists in simply hoeing about three times. In about 9 months, the main part of the leaves are stripped off the canes, and about a month before cutting trashing is repeated. The best lands yield 40 tons of cane per acre with a sugar content of 13 to 14 per cent. Some of the factories purchase or lease sufficient land to grow the canes they require and rent it to farmers, afterwards purchasing the canes from them, giving them an

amount of sugar equal to 5 per cent. of the canes, and allowing the market price for the sugar. Other factories grow the canes on their own land, attending both to the agricultural and the manufacturing side of the business. Mr. W. S. Marr estimates the cost of manufacturing one ton of Porto Rico sugar and delivering to New York as follows :—

	£	s.	d
Cost of cane	4	0	0
Cost of manufacture	3	6	8
Delivery on board ship	0	4	0
Freight to New York	0	13	9
	£8	4	5

This amount did not include import duty or insurance. Nearly all the factories work up the waste molasses into rum; 2½ gallons of molasses, worth 6*d.*, making a gallon of rum, worth 1*s.* 7*d.* Until the island came into the possession of the United States there were few up-to-date factories, only six with a double crusher for the canes, and a limited number with triple effects. The Americans are starting several central factories, the land in the vicinity is already engaged, and arrangements are rapidly being completed to extend operations to distant places by means of light railways or branches of the existing railways. The average production of about 2 tons to the acre will doubtless soon be greatly improved by modern methods of cultivation and extraction. The production is given in the following table :—

Year	Tons	Year	Tons
1896	55,884	1901	85,000
1897	54,000	1902	85,000
1898	53,800	1903	130,000
1899	35,000	1904	155,000
1900	80,000		

Hayti, or San Domingo.—This island is next in size to Cuba, the largest of the West Indian Islands, and is formed

of two negro republics. The production of sugar in 1885 was 187,000 tons, but of late years has been about 45,000 to 55,000 tons. The export of sugar to the United States for 1904–5 was 48,710 tons, valued at 722,278*l.*

Demerara (*British Guiana*).—The first class character of the cultivation and working of the cane in the fertile marshy coast lands of Demerara is only limited by the scarity of labour. The cane fields lie as a rule 5 or 6 ft. below sea-level, the water being pumped out into a system of canals which serve for the transport of the cane and facilitate the lading of sugar for export. About one-third of the population of 280,000 are engaged in the sugar industry. There are 75,000 acres under cane cultivation, and at the beginning of 1905, 45 factories were in operation. The export is practically stationary, the exports for 1905 being 112,196 tons of which amount Canada took 64,000 tons, compared with nearly 48,000 tons in 1904; the exports to the United States fell from 42,000 tons in 1904 to 28,600 tons in 1905. There was but little change in the export to the United Kingdom, but a considerable quantity of sugar was shipped to Vancouver. The exports of rum rose from 2,186,004 gallons in 1904 to 2,213,134 in 1905, but the export of molascuit rose from 7614 tons to 11,066 tons, the increase in molasses products being due to the inferior quality of the canes owing to drought.

Martinique.—The total area of the island is 243,470 acres, of which 95,600 acres are cultivated, three-fourths of this being under cane. The cane is reported to grow very quickly, so that it is ready for cutting in 12 to 15 months. In spite of the extremely cheap labour occasioned by the competition of Indian coolies, the sugar barely covers the cost of production. The export of sugar amounted in 1904–5 to 25,000 metric tons. Not only is the molasses produced in the island utilised for the production of rum, but molasses is imported for this purpose. The export of rum amounts to about 15 million litres or 3,200,000 gallons. The *Sucrerie Indigène* gives the

following particulars for the campaign 1905–6 for the factories named :—

Factory	Lamentin	St. Marie	Petit Bourg	Rivière Salée
Canes worked (tons)	69,950	46,644	80,688	47,517
Cost of cane (francs)	12.60	12.35	15.90	12.00
Cost of manufacture per ton of cane (francs)	7.54	7.63	6.38	7.11
Yield of first sugar per cent. of cane ..	5·83	6·66	7·21	6·57
,, other qualities	1·59	1·79	1·11	1·80
,, total	7·42	8·45	8·32	8·37
,, molasses	4·20	3·52	4·10	4·34
Average selling price of sugar (francs) ..	22.53	22.42	22.22	22.11

Guadeloupe.—As in Martinique the advantages allowed by France have not sufficed to keep the production at its old level, the low price of sugar barely covering expenses. Bonâme states that the cost of production per ton of cane is, in wages 4.08 francs, labourers' maintenance 3.68 francs, general expenses 4.38 francs, fertilisers 5.07 francs; total 17.21 francs, or 13*s.* 8*d.*, and an equal amount for manufacture into sugar in a central factory, without counting interest and depreciation. The number of factories in the island is 20 and the yearly output 36,000 tons. Reform is necessary as regards both agriculture and manufacture. The factories are poorly equipped, and there is a want of technical control. The quality of the cane is poor, the yield mostly amounting to 6 to 7 per cent. of sugar.

Mauritius.—Although only 705 square miles in extent, the island holds an important position as a sugar-producing colony, the export of sugar amounting to 210,000 tons in 1904. There is scarcely anything grown except sugar cane, most of the food stuffs being imported, but garden vegetables are grown by the coolies who form two thirds of the inhabitants and number 200,000. The soil is a light porous loam, frequently so stony as to render ploughed furrows impracticable,

and the cane is therefore planted in holes about 9 or 10 inches deep, about 3000 to the acre. Weeding and trashing are the only attention necessary, except that heavy manuring is needed to secure a fair crop, owing to intense cultivation in past years. Usually three crops are secured, the first after 18 or 20 months, and two of ratoons each 12 months afterwards. The canes mostly grown are the Louzier and the white and striped Tanna. Transport of canes by bullock carts has quite recently given place to haulage on tram lines and aerial railways, on which large sums of money have been spent. The yield is small, scarcely 9 per cent., but labour is cheap. Tenant farming has been stimulated by the landowners who let their land in small parcels for cane growing only, on condition that all the cane grown is to be weighed on the buyer's scales and the market price of the district paid. The cane growers provide their own carts, oxen and mules for transporting the canes to the railways or to the factories, a deduction of 6 cents per ton per mile being made for railway hauling. Nine rupees (12*s.*) per ton has been the usual price of cane brought to the carrier, and some manufacturers report that they can buy canes more cheaply in this way than they can grow them. One single corporation in Mauritius had recently 5000 cane farmers with lots of one to ten acres each, and the general bargain for land was 300 rupees (20*l.*) per acre, payable in five annual instalments, with interest on unpaid balance at 9 per cent. The crop is to be cane only and to be delivered at the central factory until purchase price and interests are paid off. When this happens higher prices will probably be realised, as there is keen competition for farmers' canes. The great drawback to the island is the frequency of hurricanes. Machinery and plant are out of date. The exported sugar finds its way chiefly to India and, in increasing quantities, to South Africa.

Bourbon (*Réunion*).—The island had a yearly production of 40,000 tons until 1904, when a cyclone caused such destruc-

tion of crop and property that a sum of 10 million francs was needed to relieve the distress. A syndicate of planters has been formed to replace the 39 factories by 4 large central factories capable of dealing with 150,000 tons of cane and giving an increase of yield from 9 to 12 per cent. M. Bonâme worked for years to improve cultivation, but the great indolence of the people and low prices hindered the realisation of his efforts. There is a great dearth of labour, but the scheme of reconstitution may work great changes.

Canada.—Beet-sugar factories have been started in Ontario and Alberta with the assistance of a bonus of ½ cent per lb. of sugar the first year or two, and ¼ cent for the two following years, but the large consumption must depend for a long time yet on imported sugar. During the past ten years Germany supplied half the requirements until 1903, when the tariff war with Canada led to the favourable treatment of British Colonial sugar, even when refined in the United Kingdom, so that the great bulk of imported sugar now comes from the British West Indies and Guiana. The imports amount to 150,000 tons per annum.

Central America.—Political unrest prevents the possible development of the cane sugar industry in the Spanish republics, and frightens away the required capital. Consequently the production barely covers the needs of the countries. Soil and climate, however, are well suited to the growth of cane. The productions for 1902–3 were, Costa Rica 4000 tons, Guatemala 10,000 tons, Nicaragua 4500 tons, San Salvador 5000 tons. British Honduras, which in 1881–1885 produced an average of over 2000 tons, now produces only two-thirds of that amount.

Ecuador.—In the moist climate of Ecuador cane ripens quickly and contains much juice, but the sugar content is low, and the juice is apt to contain much glucose if wet weather comes on before the canes are cut. Large quantities of wood are also required for fuel owing to the difficulty of drying the

begass sufficiently for raising steam. There are 12 factories at work, and the total production amounts to about 3000 tons.

Venezuela.—There is plenty of suitable land in Venezuela for growing cane and the industry has made considerable advance, the import of sugar being forbidden by law. Cane ripens down in the valleys in 8 to 11 months, and on the plains in 12 to 15 months. The manufacture is rather primitive. The production is estimated at 3000 tons per annum.

Japan.—The refineries at Ozaba, Tokio and Moji have caused a great reduction in the imports of refined sugar from Hong Kong, Japanese refiners being favoured with a rebate on raw sugar established in 1902, since the duty is refunded on sugar below Dutch standard No. 14, if refined within a year. This gives an advantage against Hong Kong of 1*s.* 8¼*d.* per picul (133⅓ lb.). In 1903, sugar was imported to the value of 2,140,282*l.* as against 1,479,924*l.* in 1902. This large increase was entirely in raw sugar chiefly from the Dutch Indies.

Value of the imports :—

Year	Dutch Indies	Philippines	Germany	Austria-Hungary	Hong Kong	Total
	£	£	£	£	£	£
1900	249,000	178,000	349,000	317,000	1,050,000	2,716,000
1901	280,000	277,000	899,000	415,000	1,110,000	3,419,000
1902	579,000	105,000	332,000	117,000	237,000	1,476,000
1903	975,000	294,000	283,000	255,000	157,000	2,140,282

Sugar culture was introduced into Japan by Dutch merchants in the seventeenth century. The cultivation is limited to the southern part of the archipelago, and special precaution has to be taken to preserve the cane from the effects of frost in the part about 30° of latitude. Considerable care is exercised in the cultivation of the cane, but the manufacture is primitive, and rather likely to decrease than increase.

The sugar production was :—

Year	No. 1 Sugar	Molasses	No. 2 Sugar	No. 3 Sugar	Syrup	No. 4 Sugar	Candy
	Tons	Tons	Tons	Tons	Tons	Tons	Tons
1901	25,174	894	1,725	2,430	..	3,342	168
1902	48,969	6,593	13,376	17,687	3	29,544	1653
1903	62,600	11,375	10,313	37,493	2	44,087	2070
1904	40,939	4,068	4,151	22,746	2	26,279	990

India.—British India may be regarded as the original home of the sugar cane, and until quite recently it remained the greatest sugar-producing land in the world. Its present importance for the world market is rather insignificant, since exports have fallen off from 72,000 tons per annum in 1889–1890 to 11,000 tons in 1903. On the other hand, India has assumed some importance in late years as regards the importation of sugar, and now consumes increasing quantities of beet sugar from Europe, although the great bulk of the sugar consumed is still produced in the country. Imports almost trebled from 1890 to 1903, the quantity imported in the latter year amounting to 273,000 tons.

The area under cane cultivation is about 2,500,000 acres, yielding about the same quantity of raw sugar in tons, an abnormally low result due to the antiquated appliances used in the manufacture which results in imperfect extraction and wasteful methods of preparation. Large tracts of land are also cultivated with sugar-yielding palms, which furnish a considerable share of the total sugar supply. Large quantities of sugar juice, molasses, and even the cane itself, appear as articles of consumption, and altogether it is not surprising that some writers of authority place the total consumption as high as 5,000,000 tons. The total output of sugar is officially estimated for 1906–7 at 2,223,400 tons of unrefined sugar, an increase of 28·9 per cent. on the previous year. The areas under cane are distributed as follows: United Provinces of Agra and Oudh 49 per cent., Bengal 19 per cent., Eastern

Bengal and Assam 11·2 per cent., Panjab 13·7 per cent., Madras 2·5 per cent., North West Frontier Province 1 per cent.

The bulk of the sugar is consumed in its unrefined state, known as Gur or Jaggery, but the Government is making efforts to introduce more efficient and modern methods of cultivation and production, although there are many obstacles to improvement peculiar to the country. That there is an increasing demand for white sugar is shown by the imports into Bombay from Java, Mauritius and Europe, yet, as Mr. A. E. Jordan points out, there is not a single factory in the Bombay Presidency for making white sugar direct from the cane, although 56,000 acres are under cane. Mr. H. V. Raw states that whereas at present India, under the most primitive methods, turns out annually 3,000,000 tons of cane sugar, as 39 per cent. of the world's supply, she could easily produce half as much again at a reduced cost, if the available area for cultivation were all made use of, and modern methods were established. The serious drawbacks at present existing are lack of organisation, of central factories, of cheap and expeditious carriage, and the ignorance of the native cultivator and native capitalist. The establishment of the Samalkota cane farm in 1902 has already produced good results in reviving the cultivation in the Godavery Delta, one of the richest cane-growing areas in Madras, by the introduction of new canes and resistant varieties of those canes which had already gone under owing to fungoid disease. Mr. S. M. Hadi in the United Provinces has developed a process of manufacturing and refining sugar meant primarily for the small native capitalists now engaged in the industry, whose resources do not enable them to go in for a more extensive plant, and especially for those tracts where cane is grown in such small lots by numerous individuals that the working of a large factory presents exceptional difficulties. The method can, however, be adapted to work on a larger scale. The bel system of manufacture which is

widely spread in Rohilkhand was taken as the basis and the leading phases are as follows. The farmers erect their crushing mills next the boiling house, and sell their juice by weight to the sugar boilers or khandsaris. The juice is then concentrated to a semi-solid substance called *rab*. The molasses is pressed out of the *rab*, and *potli* is formed, which by treatment with a water plant, called *siwar*, is bleached and yields a product known as *khand*. It is to cheapen the cost of manufacturing *khand*, and to improve its quality that was the task undertaken by Mr. Hadi. In his system the juice is extracted by improved three-roller mills worked by bullock power, and collected in a tin vessel placed at the foot of the mill, passing through perforated sheet iron strainers, while flowing into those vessels. The boiling apparatus consists of a reserve tank of galvanised iron, in which the juice is heated directly after it comes from the mill; a clarifier made of copper or brass, in which the juice transferred from the reserve tank is defecated by the addition of an extract of the wild plant *deula* (Hibiscus esculentus) and some *sajji* (crude carbonate of soda); a concentrating vessel of copper or brass, into which the juice from the clarifier is boiled; and an evaporator of the same material, which consists of several compartments, and in which the juice acquires the consistency of *rab*, or *gur* as it is called in Bengal. The latter is allowed to cool for several days until the sugar is separated from the molasses. While being cured, the sugar is sprinkled with a decoction of the *reetha* fruit (soap-nut) which makes it a milk white. The molasses is again boiled down to *gur*, which may fetch 3½ rupees or more per maund (82⅔ lb.) in the Calcutta market. The boiling plant is capable of working 80 maunds of juice into *rab* or *gur* in the course of a day. It costs about 500 or 600 rupees according as it is made of brass or of copper. The hand-power centrifugal costs about 425 rupees in Calcutta and works out about 5 maunds of *rab* into sugar per day.

Under this method 100 maunds of juice yield from 19 to

21 maunds of *rab* or *gur*, and the latter, half its weight of white raw sugar. On the average, 100 maunds of molasses when boiled again give about 70 maunds of *gur*. The raw sugar is boiled again with milk and water to form massecuite. This material is again passed through the centrifugal to yield a crystallised white refined sugar and a syrupy treacle. The treacle is boiled again, and converted into second grade crushed sugar. Ordinarily 100 of raw give 50 of refined and 38 of crushed seconds. The profits amount to 20 to 25 per cent. on the total outlay.

With the growing importation of foreign sugar, prices were continually falling and the Indian Government, taking this fact into consideration, were of opinion that unless protective measures were adopted the industry would collapse, and the country's power to continue the cultivation of sugar would become seriously threatened; they therefore, in 1894, imposed an import duty of 5 per cent. The quantity of sugar imported was, for some years, in excess of 100,000 tons, practically all of it until 1890–1891 being cane sugar from Mauritius, China, Java and the Straits Settlements. In 1895–1896, as shown in the following table, the imports of German sugar reaches

IMPORTS.

—	Mauritius	Austria-Hungary	Germany	China	Java	Straits Settlements	Total
	Tons	Tons	Tons	Tons	Tons	Tons	Tons
1893–4	68,082	577	9,465	17,565	4,999	4,344	106,395
1894–5	87,650	355	13,732	11,026	7,002	4,075	124,531
1895–6	78,600	247	35,911	10,302	5,500	5,402	136,548
1896–7	83,342	5,776	37,940	6,966	4,873	3,175	143,070
1897–8	88,901	47,287	60,165	14,559	7,024	3,746	230,432
1898–9	105,206	53,187	20,699	9,284	8,125	3,860	203,875
1899–1900	88,667	38,891	3,026	15,849	9,528	4,033	168,043
1900–1	124,476	66,066	20,100	24,372	11,262	7,413	263,840
1901–2	109,158	112,897	28,857	9,128	15,530	3,184	300,667
1902–3	118,309	44,401	7,284	28,423	28,683	10,414	273,110

nearly 36,000 tons, to be shortly followed by an increase in Austrian sugars. In March 1899, in addition to the ordinary

rate of import duty, a countervailing duty was imposed, equivalent to the bounties granted to exporters of beet sugar. After the Brussels Convention came into force, these extra duties were only maintained against those countries whose duties enabled them to compete at unfairly low prices.

The exports of cane sugar according to the Statistical Abstract were as follows :—

Year	Tons	Year	Tons
1889–90	80,799	1896–97	67,423
1890–91	49,265	1897–98	34,511
1891–92	56,859	1898–99	24,928
1892–93	53,245	1899–1900	24,698
1893–94	76,612	1900–1	14,889
1894–95	61,612	1901–2	7,562
1895–96	62,029	1902–3	11,106

Sugar factories on a modern scale have been recently established in Behar, Bengal, with the view of manufacturing cane sugar of the best quality to compete with the present importation of European sugar.

Italy.—The rapid development of the beet-sugar industry in the last few years has rendered Italy independent of imported sugar, and there is every probability that it may soon become an exporting country. The earlier attempts to grow sugar beets in Lombardy were failures, and it was a general opinion that the climate was unsuitable, as the warm weather which prevails when the autumn rains set in was thought likely to cause a secondary development of leaves and entail a loss of sugar. Further experience has proved these fears to be groundless, and the yields in the valley of the Po are superior to those of other parts of the peninsula. Previous to 1899 there were only four sugar factories in the entire kingdom with a total annual output of 6000 tons. The next year the number of factories had increased to 13 and the production was quadrupled. There are now 33 factories and 5

refineries employing 12,000 hands during the season of three to four months, and 5000 permanently. The area under cultivation amounts to 100,000 acres, with a return equal to from 8*l.* to 13*l.* per acre besides by-products for cattle feeding and manure. The consumption per head is only 6½ lb. per annum, owing to the high price of sugar. The fiscal laws prevent the utilisation of the roots for the production of alcohol at a profit, and the industry is at a certain disadvantage in the almost entire absence of native coal. The home product pays a consumption tax of 67.20 lire paper per quintal (220·46 lb.). The duty on imported raw sugar is 88 lire gold, and as gold commands a premium of 6 per cent., this is equal to 93.28 lire paper. The home manufacturer has therefore an advantage of 26 lire per quintal, and he is also allowed 6 months for payment of the tax, and moreover enjoys reduced freights on all the railways of the peninsula.

The following table gives the production, importation and consumption :—

Year	Production	Importation	Consumption	Year	Production	Importation	Consumption
	Tons	Tons	Tons		Tons	Tons	Tons
1895–6	2647	73,515	76,163	1899–1900	23,115	58,442	89,264
1896–7	2299	74,180	76,479	1900–1	60,125	39,961	100,089
1897–8	3877	74,207	78,084	1901–2	74,298	25,140	99,441
1898–9	5972	75,337	81,309	1902–3	95,409	10,071	105,481

Sweden.—The first factory in Sweden was started in 1839 at Schonen in Landskrona, but as only 3 to 4 per cent. yield was obtained, it soon closed, and many years elapsed before the attempt was renewed. In 1884-5 there were two factories at work, and the production amounted to 4000 tons, the total consumption then being about 50,000 tons. A greater development occurred in 1893-4 when the production reached 43,000 tons, about half the consumption. There are at

present 19 factories working, with a production of over 120,000 tons; the imports being almost negligible except for syrup, of which 15,000 tons are annually imported. The average sugar yield of the beets for the past ten years is 13·58 per cent., and the area under cultivation is 68,540 acres. The consumption per head is 44 lb.

Denmark.—The sugar production of Denmark during the last ten years covers two thirds of the large consumption which amounts to 70,000 tons at the present time, the consumption per head of the population amounting to 66·4 lb. per annum. There are only seven factories at work, five of which are united under one company. The imports are derived partly from the Danish West Indies and partly from Germany. The offer of the United States to purchase the islands has drawn attention to their value, and to this renewed interest must be attributed the improvement of the sugar industry in St. Croix. The exports from this island for 1902–3 were 17,304 tons of sugar and 99,946 gallons of rum.

INDEX.

ABA-EL-WAKF begass furnace, 168
— cane-mill, 141
Acarus, 94
Acclimatised beet, 397
Acer circinatum, 389
— dasycarpum, 389
— macrophyllum, 389
— nigrum, 389
— rubrum, 389
— saccharinum, 380
Acetate of lead as a defecant, 244
Acetic acid process, beet molasses, 509
Acetous fermentation, 741
Achery bean, 49
Acids, organic, in sugar, 668
Acidulating molasses, 754
— starch, 521
Action of sulphurous acid, 239
Adam's still, 748
Adant's cube-sugar process, 630
Adjusting pressure in cane-mills, 154–160
Adulteration of maple sugar, 389
— of sugar with starch sugar, 709
Agricultural machinery, 32
Air and cold, concentrating by, 301
— in cane soils, 30, 32
— — kiln pipes, 665
— pumps, 291
Aitchison's revolving cylinder for evaporating, 252
Albumen and pulp sieves, 465
— in refining, 622
Albuminous matters in cane juice, 111
Alcohol, beet, 771
— chemistry, 729
— contraction, 731
— determination of, 783
— industrial, 782
— percentage tables, 732
— rectification, 777
— sources, 736
— yield from molasses, 781
Alcoholic fermentation, 738
— spirits, rum and, 729
Alkalinity of ash, determination, 676
— of carbonated juice, 464
— of fermentation molasses, 754
Alliot and Paton's trash turner, 312
Alliot and Paton's triple effect, 332
Alternating beet presses, 483
Alum process, beet molasses, 509
Alumina in char, 716
— — refining, 585
American maple sugar, 388, 390
— sorghum, 515
Ammonia as manure, sulphate of, 40
— digesting char with, 666
— pipes, 333
Ammonium chloride, washing char with, 665
Amorphous sugar, 306
Analyses, beet, 402–4, 410
— — ash, 410
— — juice, 457–8
— — pulp, 403, 456
— — sugar, before and after Weinriching, 572
— cane ash, 33, 34
— — juice, 33–4, 101–3
— — soils, 36, 38, 39
— — sugar, before and after Weinriching, 572
— char, 728
— commercial sugars, 712
— diffusion juice, 465
— lime scums, 482
— maple sugar and syrup, 385
— massecuites, raw sugars, molasses, 500
— molasses, 500
— new char, 727
— Ohlendorff's dissolved Peruvian guano, 44
— — early cane manure, 42
— ripe cane, 33
— rums, 771–2
— soil, 36
— starch sugar and syrup, 531
— stock chars from refinery, 728
Analysis, beet molasses, 501
— beetroots, 693
— cane, 694
— char, 714
— glucose, 705
— optical methods, 695
— raw sugar, 669
— starch sugar, 705

Analysis, sugar, special processes, 677
— — statement of results, 676
Andropogon schoenanthus, 95
Animal black. *See* Char.
— charcoal. *See* Char.
— power mills, 122
Anthomyia betæ, 419
Anthon's method, determination of glucose, 709
— process, starch sugar, 560
Antigua factory, cost of working, 190
— sugar in, 837
Antiseptics, 107
Ants, 88
— cane which resists, 6
Areometers, 107
Argentine Republic, sugar in, 790
Arrow of cane, 25
Ash, determination, 674
— — of alkalinity, 676
— in cane, 33, 34
— of sugars, constituents, 712
Ash-leaved maple, 389
Assam canes, 5
Australian beet, 788
— sugar, 785
Austria-Hungary, sugar in, 790
Austrian granulated sugar, 640
Avae cane, 9

BACILLUS vascularum, 96
Bacteriosis, beet, 421
Bag-filters, 586
— washing, 589
Bangues, 796
Banking cane, 77
Barbados cane yields, 98
— sugar in, 834
Baryta treatment of beet molasses, 504
Basket sugar, 306
Batavian canes, 3
— ribbon cane, 3
Battery of charcoal filters, 597
— of open pans, 250
Battut, temperature in diffusers, 450
Baumé's hydrometers, 107, 689
— percentage tables, 689
Bazé's defibrator, 176
Beam engine, 161
Beanes' carbonic acid process, 665
— dry hydrochloric gas, 665
— ozone process, 486–7
— sulphurous process, 233
Beet, 393
— acclimatised, 397
— alcohol, 771
— analyses, 402–4, 410, 693
— analysing table, 423–4
— annual, 399
— ash, analyses, 410
Beet, bacteriosis, 421
— best characteristics, 395
— biennial, 393, 400
— bonedust for, 409
— Brabant, 399
— buying, 422
— carrion beetle, 417
— cellar, 417
— centrifugals, 435
— cleansing roots, 430
— climate, 405
— collet rose, 399
— — vert, 399
— composition, 400
— cost of diffusion factory, 444
— density, 395
— depth for sowing, 413
— depulpers, 458, 465
— determination of sugar in, 693
— diffusion, 435, 440
— — circular battery, 445, 447
— — cost of working, 445
— — residues, 451
— diseases, 417
— distance between, 413
— distilling, 774
— dry-rot, 421
— dung for, 409, 411
— electoral, 397
— enemies, 417
— English, 402–4, 826
— European varieties, 399
— fatigue, 419
— first sugars, 497
— flesh, 393
— fly, 417
— formation and storage of sugar in, 401
— frost, 412, 415
— glue refuse for, 409
— greenneck, 397
— greyneck, 398
— guano for, 409
— harvesting, 415
— heart rot, 421
— hoeing, 412
— immature, 416
— imperial, 397
— in England, 826
— juice, carbonating boilers, 466
— — carbonation, 459
— — composition, 457
— — concentrating, 494
— — continuous lime kiln for, 480
— — defecation, 457
— — density, 395, 415
— — extracting, 422
— — extractor, revolving, 435
— — fermenting, 772
— — filtering through char, 473, 489
— — — — gravel, 488, 491

Beet juice, heater, 466
— — pipe, 427
— — pump, 428
— — sampling, 424
— — saturation pan, 466
— — standard value, 423
— — sweetness, 395
— — transport, 427
— leaves, 396
— lime scums, 482
— maceration, 435, 773
— Magdeburg seed, 394
— manures, 408
— mode of growth, 399
— molasses, 501
— — acetic acid process, 509
— — alum process, 509
— — analysis, 501
— — baryta treatment, 504
— — Boivin and Loiseau's process, 508
— — elution, 505
— — lime treatment, 504
— — Manoury's process, 506
— — Margueritte's process, 509
— — osmose process, 502
— — salts in, 510
— — Scheibler's process, 507
— — Seyferth's process, 505
— — Steffen process, 506
— — strontia treatment, 504, 507
— — sucrate of hydrocarbonate of lime process, 508
— nematodes, 419
— nitrates for, 409
— nitrogen for, 409
— northern rose grey, 398
— over-dunged, analysis, 410
— peronospora, 420
— phosphates for, 409
— planting in ridges, 412
— potash salts for, 410
— — — in disease, 419
— presses, 435
— pressing lime scums, 482
— pulp, 403
— — presses, 453
— rasper, 424
— rasping, 435, 772
— red-neck, 398
— root, 395, 400
— rules for growing, 412
— running to seed, 399
— saccharine values, 401–4
— salt for, 409
— salts in, 400
— sampling, 424
— scale of prices, 423–4
— second sugars, 497
— seed, per acre, 411
— — raising, 414
— — single germ, 412
Beet, seedlings, 414
— selecting seed, 394, 400
— shape, 393
— silo, 414, 417, 430
— silver Y moth, 419
— skin, 393
— slicer, 436–440
— slices, presses for, 435
— soil, 406, 408
— sowing, 411
— spirit, 771
— stoning, 431
— storing, 416
— sugar, 394
— — analyses before and after Weinrich-ing, 572
— — curing, 495
— — glucose in, 680
— — machinery, 495
— — production in Europe, 825
— — yields, 497
— sulphate ammonia for, 409
— superphosphate for, 409
— syrups, concentrating, 494
— third sugars, 497
— transport, 427
— trotzer, 400
— types of, 396
— unripe, 416
— Vilmorin's, 396
— — improved white, 398
— Walkhoff's mixed method, 444
— washing, 432
— weight, 395
— white Silesian, 393, 396
Begass as fuel, 46, 162
— manure, 46
— ash as manure, 45
— composition, 164, 166
— drying, 173
— elevator, 351
— for paper making, 196
— from cane, 164
— furnaces, 168, 350
— heating power, 163, 167
— loss of juice in, 148, 186
— moisture in, 163, 166
— roll, 311
— silica in, 168
— thermal value, 163
— woody fibre in, 164
Belgian sugar, 793
Bella sugar, 6
Bengal cane setting, 76
— red cane, 5
Bergreen's crystalliser, 609
Berkshire beet, 402
Bernard-Ehrmann process, 245
Beta alba, 393
— vulgaris, 393
Bibliography, 25–36

Bird's-eye maple, 381
Bisulphite of lime for cane juice, 233
Black. *See* Char.
— and yellow canes, 5
— cane, 4
— maple, 389
— rot of cane, 98
Blake Barclay blow-up, 582
Blood as cane manure, 40
Bloomer, 247
Blowing sulphurous acid into cane-juice, 234, 238, 242
Blow-ups, 582
Boake Roberts' defecant for filtration, 585
Bock's crystallising process, 609
Boilers, types of, 346
Boiling beet syrup, 494
— bones for char, 658
— by steam, 251
— down liquor, 605
— for large grain, 270, 340, 606
— *in vacuo*, 258
— maple sap, 384
— palm juice, 371
— points, alcoholic liquids, 730
— — impurities in alcohol, 744
— quick, 275
— starch, 524, 560
— syrups, 295
— — time required, 643
— under pressure, features, 286
Boivin and Loiseau's process, beet molasses, 508
Bonavist bean, 91
Bone black. *See* Char.
— dust for beet, 409
Bones, boiling, 658
— carbonising, 658
— for char, 658
Books, xxv–xxxvi
Borassus flabelliformis, 361
Borers, 89, 90
Botany of cane, 1
Bounties, 309, 807
Bourbon cane, 2
— sugar in, 847
Bour's pan, 254
Bouscaren's diffusion, 197, 201
Box-elder, 389
Brabant beet, 399
Brame and Chevallier, concentrating by cold air, 301
Braunbeck's albumen filter, 465
Braunschweigische crystallisers, 497
Brazil, sugar in, 795
Brazilian still house, 768
Breaker, sugar, 359
Breitfeld-Danek sand filter, 491
Brewing sugars, 521, 647
Brickmould soil for canes, 30
British Guiana. *See* Guiana
Brown coal for filters, 248
— sugar, 303
Brushings, 621
Bruto sugar, 798
Buchanan and Vickess's kiln, 600
Buckinghamshire beet, 402
Burning char, 598
Burnt cane, 29
Büttner Meyer's pulp drier, 454
Buffer of centrifugal, 613, 615
Buying beet, 422

CABINET maple, 381
Cail's triple effect, 279
Cajanus indicus, 91
Calandria drainer, 334
Calcimeter, 718
Caledonian queen cane, 12
Caloriser, 449
Canada, sugar in, 848
Canadian maple sugar, 384
Cane analyses, 33–4
— analysis, 694
— ants, 88
— arrow, 25
— ash, 33
— banking, 77
— borers, 89
— botany, 1
— buds, 23
— burnt, 29
— carrying, 81, 315
— climate, 27
— composition, 32
— crushing, 121
— — cost, 132
— cuttings, 69
— — setting out, 76
— defibrators, 176
— development, 15
— diffusion, 194
— diseases, 87
— distances of plants, 75
— double crushing, 179
— effect of drought, 29, 228
— — of frost, 27
— — of rain, 28
— — of sea air, 27
— — thaw, 28
— enemies, 87
— erect habit, 13
— estate, draining, 56
— — laying out, 50–57
— eyes, 70
— flower and fruit, 25, 26, 71
— geographical range, 27
— grub pest, 97
— gumming disease, 96
— harvesting, 80

Cane, holing, 75
— imbibition, 179
— inflorescence, 71
— itch, 8, 12
— joints, 22, 70
— juice, albuminous matters in, 110
— — analyses, 101–3, 113, 116, 224
— — ash, analyses, 110
— — batter for, 226, 237
— — chemical defecation, 219
— — clarifying, 211, 213, 325
— — composition, 101–3, 113, 116–9
— — concentrating, 249–327
— — cracking, 217, 224
— — defecating, 211, 230, 325
— — — by heat, 212, 226
— — density, 103
— — effect of manufacture, 114
— — extracting, 121, 310, 316
— — fermentation, 105–7
— — filtration, 248, 326
— — heater, 214, 323
— — lime bisulphite for, 233
— — — defecation, 219
— — — water test, 220
— — mineral matters in, 108
— — nitrogenous matters in, 111
— — organic matters in, 110
— — straining, 211, 322
— — sucrate of lime for, 223
— — sulphurous acid for, 233
— — tempering, 226, 246
— — testing, 107, 224
— — unripe, 102
— — yields, 100, 156, 161, 318
— keeping cut, 106–7
— knives, 201
— knots, 23
— — juice, 103
— lice, 88
— lining out, 75
— loader, 85
— maceration, 177, 179
— — working figures, 184
— manures, 32, 38
— — application, 40–4
— — produced on the estate, 45
— manuring, 32, 38–44
— middle, 103
— mills, 121–160, 312
— — adjusting pressure, 154–160
— — animal power, 122
— — cost of wooden, 133
— — engines, 160
— — fuels, 160
— — furnaces, 170–6
— — hydraulic attachment, 154–159
— — iron, 132
— — motors, 128, 160
— — steam power, 161
— — 3-roller, 127
Cane mills, toggle levers in, 159
— — water driven, 128, 161
— — windmills, 161
— — wooden, 128
— — working results, 144, 146
— moulding, 77
— period of maturation, 25
— planting, 74
— pou blanc, 88
— propagating, 68–71
— ratooning, 77
— rats, 87
— replanting, 80
— rind, 24
— — fungus, 97
— — juice, 103
— roots, 15
— — functions, 22
— — length, 16, 18
— rust, 94
— sap vessels, 23
— seed, fertility of, 72
— seedlings, 73
— selection, 15
— slicers, 201
— slices, drying, 198
— — for diffusion, thickness, 201
— slicing machines, 200
— smut, 97, 98
— soil, 30
— — air in, 30, 32
— — composition, 35, 39
— — fallows, 32
— — lime in, 37
— — magnesia in, 37
— — organic matter in, 38
— — tilling, 31
— soaking in crushing, 179
— sorting, 81
— stalks, 22
— stool, 78
— structure, 15
— sugar, analyses before and after Weinrich-ing, 572
— — campaigns, 100
— — cost to manufacture, 190
— — factories, 309
— — filter presses, 591
— — synopsis of operations, 120
— — yields, 98–100, 369
— — — by diffusion, 207
— testing new sorts, 14
— tissues, 23
— top, 70
— transporting, 81
— trashing, 77
— varieties, 1
— weeding, 77
— wild, 1
— windrowing, 85
— woody fibre, 316

Cane worms, 98
— yields, 2, 98, 100
— — after drought, 28–9
Capillair grape-sugar, 564
— syrup, 563
Caramel, 294, 770
Carbon in char, 715
— in new char, 659
Carbonate of lime in char, 717
Carbonated juice, alkalinity of, 464
Carbonating boilers, 466
— double, 461
Carbonation of beet juice, 460
Carbonic acid for defecating beet-juice, 459
— — for purifying char, 665
— — gas tester, 476–7
Carbonising bones, 658
Carib cane mill, 121
Carrion beetle, 417
Carrying cane, 81, 315
Caryota urens, 361
Casamajor's sawdust filtration, 592
Cast-iron vacuum-pan, 265
Castor-oil plant for green-soiling cane, 49
Cattle food from pressed beet slices, 451
Cellar for beet, 417
Cellier-Blumenthal still, 749
Central America, sugar in, 848
Central factory system, 382
Centrifugal pumps, 210
Centrifugaling raw sugar, 304
Centrifugals, 304, 344, 569, 611
— continuous, 612
— discharging, 612, 614
— Duncan and Newlands', 628
— electrically driven, 574
— Patterson's, 576
— vibration, 615, 619
— Walker and Patterson's, 629
— water driven, 573
— Weinrich, 569
— Weston's, 573
Chaetosticha, 90
Chandler and Rickett's method, 711
Chapman's circulators for triple effects, 280
— coffey still, 750
— Rousselot cane mill, 140
Char, absorption of air, 662
— absorptive powers, 661
— action, 661
— adulteration, 659
— air in kiln pipes, 665
— ammonia given off by, 662
— analysis, 714
— arsenic in, 723
— ash, 659
— bones for, 658
— burning, odours, 664
Char, carbon in, 659, 665
— carbonate of lime in, 665
— cisterns, 593
— — emptying, 663
— — filling, 663
— colour, 594
— crushing, 658
— digesting after use, 664, 666
— drying, 599
— duration of contact, 594, 660
— dust in, 659
— filtering beet juice through, 488, 491
— filters, 592
— — for starch sugar, 529, 551
— foreign, 659
— freeing from iron, 658
— grain, 659
— hardness, 659
— home-made, 659
— kilns, 598
— — scale, 666
— peroxide of iron in, 659
— porosity, 659, 725
— removing accumulated mineral matters, 664
— — iron, 666
— — mineral and organic matters by, 662
— reducing carbon in, 603
— revivifying, 598, 663
— silicious matters in, 659
— size of grist, 660
— souring, 666
— spent, ash, 659
— substitutes, 656
— sulphate of lime in, 659
— surface attraction, 662
— temperature in reburning, 663
— test for reburning, 664
— vapours, collecting, 601
— washing, 660, 663
— — new, 660
— weight, 659
Checking insect pests, 93
Chemical defecation of cane juice, 219
Chemistry of alcohol, 729
— of sugars, xiii–xxii
Cheribon cane, 3
Chili, sugar in, 800
China, sugar in, 800
Chinapatam cane mill, 122
Chinese cane, 6, 519
— — of Province Wellesley, 8
— sorghum, 519
— yeast, 757
Chiquelin, vacuum pan construction, 273
Chloride of tin, 247
Chlorine in char, 721
Circular beet diffusion battery, 445, 447

Claassen, analyses of factory products, 499
Cladosporium putrefaciens, 421
Clairçage continu, 577
Clairce, 497
Clarification of cane juice, 211, 219, 224
— Palo Alto, 227
Clarifiers, discharging, 219
— heating power, 213, 236
— skimming, 214, 325
Clay batter for cane juice, 226, 237
— soil for canes, 30
Claying sugar, 303
Cleansing beets, 430
Cleland's bag filters, 586
Clerget's method, sugar analysis, 682
Clibborn's cane mill, 128
Climate for beet, 405
— — cane, 27
— — maples, 381
— — sorghum, 515
Cochin China cane, 7
Coconut palm, 361
Cocos nucifera, 361
Coil clarifier, 325
Cold, cane which resists, 7
— concentration of syrup, 301
— effect on cane, 27
Collas's beet stoner, 431
Collecting palm juice, 365
Collet rose beet, 399
— vert beet, 399
Colletotrichum falcatum, 97
Colloids in cane juice, 194
— in beet molasses, 502
Colorimeter, 727
Colour, tempering for, 246
Colouring rum, 769
Colwell drier, 600
Commerce in sugar, 785
Commercial sugars, analyses, 712
Complete cane sugar factories, 309
— sorghum factory, 520
Composition of beet juice, 457
— of cane, 32
— of cane juice, 101
— of cane soils, 35
— of commercial sugars, 712
Compressed steam pans, 288
Concentrating beet syrup, 494
— by cold, 301,
— cane juice, 249
— starch syrup, 552
— syrup by cold, 301
— under pressure, 288
Concrete sugar, analyses of, 258
Concretor, 256
— construction, 256
Condense box, 217
Condenser, counter current, 335
Condenser, injection, 341
Condensers, Horsin Déon on, 274
Congealing syrups, 301
Constable and Michel's diffusion, 196
Constituents of ripe cane, 33
Consumption of sugar, 785–856
Continuous cane diffuser, 205
— — presses, 435
— centrifugals, 612
— lime kiln, 476
— still, 764
Contraction of alcohol, 731
Converters, 533, 543, 557, 558
Cook's methods of washing char, 665
Cooler for, massecuite, 495
— sugar, 359
— syrup, 553
Cooling loaves, 620
Copper fire stills, 762
— vacuum pans, 264
— wall, 251
Corty's still, 757
Cost of beet diffusion factory, 444
— of cane crushing, 132
— of fuel, 353
— of manufacturing beet sugar, 405
— of manufacturing cane sugar, 190
— of manufacturing melon sugar, 392
— of palm sugar, 375
— of planting palms, 365
— of wooden cane mill, 133
— of working beet diffusion, 445
Costa Rica sugar, 848
Covered steam pans, 258
Cracked juice, settling, 225
Cracking cane juice, 217
— objections, 225
Cream of lime for cane juice, 223
Creole cane, 9
Crushing cane, 121, 132, 176, 321
Crystallisable sugar in cane juice, 104
Crystallisation affected by sulphuric acid, 239
— by cold, 301
— principles, 269
Crystallisers in motion, 342, 496, 608
Crystalloids in beet molasses, 502
— in cane juice, 194
Crystals, machining, 612
— time for boiling, 607
Cuba, sugar in, 839
Cuban factory, 357
Cube cutting machine, 639
— sugar, 622
— — drying stoves, 632, 636
— — impregnator, 626
— — machining, 626
— — pressed, 634
Cubes from centrifugal granular sugar, 624

Cucumis melo, 391
Curing beet sugar, 495
— cane sugar, 303
— massecuite, 608
Cush-cush, 211
Cut canes, keeping, 105
Cuttaycabo cane, 6
Cutting a pan, 607
— date palms, 365
Cuttings, cane, 68

DANEK's filter press, 486
Date palm sugar, 361
Davier's diffusion, 198
Daw for tapping palms, 366
Decantation tank, 475
Decarboniser, Weinrich's, 604
Decolorisation, 592
Decolorising, how produced, 661
— power of char, 726
Deeley's blow-up, 584
— drier, 600
— vacuum-pan, 261
Defecants in refining, 585
Defecating apparatus, 322
Defecation, beet juice, 458, 463
— cane juice, 211, 224
— — — by chemicals, 219
— process, Weinrich's, 230
— top and bottom, 473
Defecators, 325
Defibrators, 176
Definition of sugar,
Dehne's Excelsior filter, 489
— filter press, 486
Demerara, crystals, 246
— sugar in, 845
Deming's superheat clarification, 227
De Mornay cane mill, 148
— improved mill, 149
Deniss' beet washer, 434
Denmark, sugar in, 856
Density of beet juice, 395, 415
— of cane juice, 103, 109
— finding, 107
Depazea sacchari, 95
Depulpers for beet, 458, 464
Detection, fluorine in char, 723
Determination, alcohol, 783
— alkalinity of ash, 676
— alumina in char, 716
— arsenic in char, 723
— ash, 674
— carbon in char, 715
— carbonate lime in char, 717
— chlorine in char, 721
— decolorisation power of char, 726
— dextrose by fermentation, 705
— glucose, 671, 709
— — gravimetric method, 673
Determination, glucose in beet sugars, 680
— grist of char, 725
— insoluble ash, 675
— invert sugar, gravimetric method, 673
— iron in char, 716
— lime in char, 715
— magnesia in char, 716
— moisture, 675, 709
— — in char, 714
— nitrogen in char, 723
— organic matter in char, 717
— phosphoric acid in char, 716
— porosity of char, 725
— raffinose, 688
— soluble ash, 675
— sugar, 669, 688
— — by Fehling's solution, 679
— — by polariscope, 695
— — in beet, 693
— sulphides in char, 721
— sulphuric acid in char, 721
— water, 675, 714
— weight of char, 724
Deula, 852
Development of cane, 15
Dextrine, 521
Dextrose, xix
Dialysis, 195, 532
Diard cane, 12
Diastase acting on starch, 521
Diatrœa saccharalis, 90
Diffusion, beet, 440
— battery, 449
— begass, 205
— cane, 194
— early history, 196
— factory, beet, cost, 444
— fuel for, 193
— juice, analysis, 457-8, 465
— — distilling, 775
— — impurities, 462
— plant, Manlove's, 201
— process, beet, cost, 445
— — duration of, 450
— — water and juice, 450
— pulp, analyses, 456
— residues, beet, 451
— sugar yield, 197
— vessel, Manlove's, 204
— water for, 450
Digesting char after use, 666
Discharging centrifugals, 612, 614
— clarifiers, 219
— massecuite, 341
Disease, pine-apple, 98
Diseases of beet, 417
— of cane, 87
Dissolving raw sugar, 582
Distillation, 744

Distilling beet roots, 774
— diffusion, juice, 775
— rum, 757
Dobarrah, 377
Dolichos lablab, 91
Dominica, sugar in, 837
Double-bottomed clarifier, 216, 218
— carbonating, 461
— crushing cane, 152, 316
— still, 759
Doubling, 270
Drainer, calandria, 334
Draining cane estate, 56–63
— estimate, 61
Draining sugar, 303
Dr. Icery's tables, 116
Drought, effect on cane, 29
Drying begass, 173
— char, 599
— loaves, 622
— moulded cubes, 624
— stoves for cube sugar, 636
— sugar, 346
— washed beetroots, 434
Dry rot, beet, 421
— vacuum pump, 337
Duboscq's colorimeter, 727
Dubrunfaut's diffusion, 197
— osmose, 502
Duchassaing's macerator, 179
Dulloah, 377
Duncan and Newlands' alum process, 509
— centrifugal, 628
— cubes, 628
Dunder as manure, 47
— in fermentation, 751
Dung for beet, 409, 411
Durra, 514

EARLY amber sorghum, 515
— cane manure, Ohlendorff's, 42
Eastern irrigation, 63, 65
East Indian canes, 5
Ecuador sugar, 848
Effect of heat on syrup, 229
Effects, 279, 329
Effluvia from char burning, 664
Egypt, sugar in, 803
Egyptian cane-yields, 99
Ehrmannite as a defecant, 245
Ehrmann's analysis of cane juice, 115
Eisfeld's char revivification, 666
Electoral beet, 397
Electrically driven centrifugal, 345, 574
Electricity in saturation, 474
Electrolysis, 653
Elephant cane, 7
Eliminating pans, 277
Elmenhorst's method of liquoring, 624
Elution, 505
Emptying centrifugals, 612, 614
— subsiders, 236, 326
— "teaches," 295
Enemies of beet, 417
— of cane, 87
Engines, 157, 161, 314
English beet, 402–4, 826
— sorghum, 514
Entrainment collector, 268
Erect habit of cane, 13
Estimate for draining cane estate, 61
Eureka separator and transformer, 306
Europe, production of beet sugar in, 825
Evaporating beet juice, 494
— by revolving cylinder, 252
— by steam, 251
— films, 252
— palm juice, 371
— powers, table, 236
— starch sugar, 528
Evaporation entailed by maceration, 184, 190
Evrard's skimmer, 475
Express vacuum pan, 276
Extracting beet juice, 422
— cane juice, 121, 316
— — — apparatus for, 310

FACTORY, tropical sugar, 309
— small model, 353
— Cuban and Peruvian, 357
Fallows for cane soil, 32
False grain, 270, 495
Farley drier, 600
Faroffa, 306
Fatigue betteravière, 419
Fawcett and Preston's bag filter, 591
— — — multiple effect, 294
— — — rum still, 757
— — — steam clarifier, 214
— — — — defecator, 213
— — — triple effect, 280
Feculencies as manure, 47
Fehling's process, sugar analysis, 671, 673, 679
Fermentation, 736
— acetous, 741
— alcoholic, 738
— apparatus, 743
— beet juice, 772
— cane juice, 105
— lactic, 742
— process, sugar analysis, 679
— putrid, 742
— viscous, 742
Fermenting molasses, 753
Fesca's liquoring machine, 622
Fibre in cane, woody, 316

Fichet and Heurtey's lime kiln, 479
Fields, size of, 67–8
Fiji sugar, 819
Fill house, 620
Film evaporators, 252
Filter bags, 586
Filtering beet juice through char, 473, 489
— — — — gravel, 488
— cane juice, 248
— defecants for, 585
— liquor from blow-ups, 586
— starch sugar, 527
— through char, 594
— — — upward, 663
— — sand, 491
Filter presses, 483
— — for cane sugar, 591
— — lime scums, 483
Filters, 326, 335, 488
Filtration, 657
— mechanical, 488
— unsatisfactory, 486
Finings for cane juice, 233
Fire heated open pans, 249
— — rum still, 760
First sugars, 497
Five-roller cane mills, 153, 321
Fives-Lille beet juice pump, 428
— — circular beet diffuser, 447
Flat mats, 86
Fletcher and Leblanc's 4-roller mill, 151
Flow of maple sap, 381
Fluorides in fermentation, 754
Fluorine in char, 723
Fly, beet, 417
Forcing sulphurous acid into cane-juice, 237, 241, 242, 285, 286
Fossil meal for filtering, 586
Foster and Campbell's triple effect, 292
Fouchard's granulated starch sugar, 565
Four-roller cane mills, 150–3
France, sugar in, 804
Freezing syrups, 301
French sorghum, 514
Frost in beet, 412, 415
— in canes, 27
— in sorghum, 515
Fruit of sugar-cane, 25
Fruits, sugar in, xvi
Fryer's concretor, 256
Fuels, 162, 353
— cane diffusion, 206
— maceration, 187
Furnaces, 160
— begass, 169, 350

GADSDEN's pan, 252
Gas from lime kilns, 480
Gasing cane-juice, 237, 241, 242
Gasogene lime kiln, 480
Gaucheas, 366
Generating sulphurous gas, 237
German granulated sugar, 640
Germany, sugar in, 809
Gibb's granulator, 643
Girard on beet rootlets, 401
Gluten in date sugars, 378
Glucose, 521. *See* Starch sugar
— commercial analysis, 705
— determination, 671
— — gravimetric method, 673
Glucose in beet sugars, determination, 680
Glue refuse for beet, 409
Godillot's begass furnace, 174
Golden bloom, 247
— syrup, 645
Gomuti palm, 361
Goor, 362, 851
Gooseneck sorghum, 520
Graeff and Geister's steam defecation, 227
Grain, false, 495
— formed *in vacuo*, 268
— suitable for crystallisation in motion, 610
Graining in vacuum pan, 265, 268, 339
— lime water for, 271
— low down, 269
Granite soil for canes, 30
Granular matter in cane-juice, 110
— sugar, cubes from, 634
Granulated starch sugar, 565
— sugar, 640
— — boiling, 607
— — machining, 612
Granulation of cane-juice, 249
Granulator, 346
Gravel filters, 488
Green-neck beet, 397
Green Selangore cane, 12
Green-soiling cane, 32, 48
Greiner's vacuum pan, 276
Grenada, sugar in, 836
Grevenbroich cube-cutting machine, 639
— mixer, 496
Grey-neck beet, 398
Grist of char, 660, 725, 728
Grocery sugar, 103, 240
Grub pest, cane, 97
Guadeloupe mills, 161
— sugar in, 846
Guano for beet, 409
— for canes, 40, 44
Guatemala sugar, 848
Guiana sugar, 815
Guinea corn, 514
— — to cure salt land, 31

Guinea grass to cure salt land, 31
Guingant cane, 10
Gumming of cane, 96
Gurpatta, 377
Gypsum batter for cane-juice, 226

HADI's process of making sugar, 851
Half-shade polariscopes, 696
Hanriot and Lindeboom's beet pulper, 426
Hard maple, 380
Harvesting beet, 415
— cane, 80
— sorghum, 514
Harvey's eliminating pan, 277
Hatton's continuous defecator, 230
Hawaian cane-juice, 102
— sugar, 820
Hawley's water heater, 595
Hayti, sugar in, 844
Heart rot, beet, 421
Heat, effect on syrup, 229, 251
— evaporation of syrup by, 249
— in defecation, 212
Heating massecuite, 495, 619
— power of begass, 162
— — of clarifiers, 236
Hepworth centrifugal, 344, 616
Herpestes ichneumon, 87
Hersey's cube sugar machine, 634
— granulator, 346, 641
Herzfeld's inversion process, 682
Heterodera Schachtii, 420
Hibiscus esculentus, 852
History of palm sugar, 376
— of sugars, xxii–xxv
Hoeing beet, 412
Holing for canes, 75
Holland, sugar in, 816
Hommerin's entrainment collector, 268
Honduras cane, 520
— sugar, 848
Honey cane, 520
Horsin Déon on condensers, 274
Howard's cane loader, 85
Huch and Lauke's vacuum crystalliser, 611
Hulla's beet slicer, 439
Hydraulic attachment to cane mills, 154, 157, 314
— beet presses, 435
Hydrochloric acid for removing mineral matters from char, 664
Hydro-extractors, 305, 344, 435, 611
Hydrometers, 107–8
Hypocrea sacchari, 96

ICERYA sacchari, 88
Icery's tables, 116–119
Ichneumon flies, 91
Imbibition, cane, 179
Immature beet, 416
Imperial beet, 397
Imphee, 514
Impregnator for cubes, 626
Impurities in alcohol, boiling-points of, 744
In and in system of refining, 567
Incrustation in boilers, 349
— — — triple effects, 331
India, sugar in, 850
Indian cane mills, 121
— canes, 5
— corn to cure salt land, 31
— irrigation, 66–7
Indigo for green-soiling cane, 48
— sauvage as manure, 50
Industrial alcohol, 782
Inflorescence of cane, 71
Injector for lime kilns, air, 480
Insect pests, checking, 93
Insoluble ash, determination, 675
Internodes in cane stalks, 23
Inversion caused by open pans, 251
— process, sugar analysis, 682
Invert sugar, xviii
— — determination, gravimetric method, 673
Inverting sugar, 645
Ireland, beets grown in, 404
Irimotu cane, 9
Iron cane mills, 132
— in char, 716
— peroxide in char, 659
— removal from char, 666
— sulphide in kiln pipes, 666
Irrigation, 63–68
Isaria Barberi, 91
Italy, sugar in, 854

JACKAL, cane which resists, 6
Jaggery, 851
Jamaica still, 759
— sugar in, 838
Japan, sugar in, 849
Jasper and Boushey's cube sugar, 637
Java cane, 3
— sugar, 817
Jebb's process, starch sugar, 538
Jelinek's scum saturation, 474
Jellying, 272
Jet condenser, 335
Johnson's filter press, 484
Johnson's process, starch sugar, 531
Joints of canes, 22
Jouin and Peay's cane slicer, 201
Juice heater, 214, 323, 329, 466
— keeping filtered, 110
— lost in begass, 148, 186

Juice pumps, 207, 322
— purification processes, 647
— sugar in cane and beet, 688
— thin and thick, 494
— yields, 100, 370

KAJLEE cane, 5
Kasalowsky's filter, 489
Keeping cut canes, 105
— filtered juice, 110
Keil and Dolle's beet rasper, 425
Kessler's diffusion process, 205
Khand, 852
Khaur, 377
Kieselguhr for filtering, 586
Kiln deposit, 666
— pipes, air in, 665
— — scale, 666
Kilns, char, 598
— lime, 475
— revivifying, 598
— size of lime, 478
Kinds of beet, 396
— of cane, 1
— of sorghum, 515
Kittool palm, 361
Kleeman's lignite filter, 248, 592
Kluzemann's press, 451
Kneller's concentrating by dry air, 301
Knives for slicing canes, 201
— for slicing beet, 436
Knots on canes, 23
Knoop's vertical crystalliser, 609
Königsfeld knife, 439
Körting's sulphurous acid plant, 241
— jet blower, 469, 480
Krajewski's cane breaker, 176, 321
Kulloor cane, 5
Kulmiz kiln, 480
Kuthe-Ander's saturation process, 474

LABOUR for triple effects, 282
Lactic fermentation, 742
Lactin, xiv
Lactose, xiv
Lævulose, xix
Lahina cane, 10
Langen cube sugar process, 623
Langen's modification of Steffen's washing process, 581
Laurent's polariscope, 696
Lavenham beet, 402
— — pulp, 403
Laying out cane estate, 50–57
Lead acetate as a defecant, 244
Leaf-sheath disease, 96
Lemon grass, 95
Length of cane roots, 16, 17
Lice, 88
Light-coloured Indian cane, 5
Lignite for filters, 248
Lillie evaporator, 297
Lilpop's osmogene, 504
Lime as cane manure, 41
— bisulphite for cane-juice, 233
— defecation, 219
— for defecating beet juice, 458, 470
— in cane soils, 36
— in char, 715
— in milk of lime, 472
— in refining, 568, 585
— kilns, gas furnace, 480
— — size of, 478
— — temperature of, 479
— — zones in, 479
— preparing for cane-juice, 223
— proportion for cane, 221
— scums from beet, 475, 482
— — pressing, 238, 473
— — slimy, 486
— sucrate for cane-juice, 223
— sulphate in char, 659
— treatment of beet molasses, 504
— water for tempering molasses, 272
— — in graining, 271
— — test for cane-juice, 220
Limestone for defecation lime, 470
— soil for canes, 31
Linard's beet juice pipe line, 427
Lining out cane estate, 75
Liquor, boiling down, 606
— level control in multiple effect, 332
Liquoring loaves, 621
— moulded cubes, 624
Literature, xxv–xxxvi
Liversidge on cane roots, 19
Loader, Howard's cane, 85
Loaf sugar, 619
— — boiling, 607
— — cooling, 620
Loaves, cooling, 620
— drying, 622
Loaves, liquoring, 621
Louisiana cane yields, 99
Lovibond's tintometer, 727, 770
Low-pressure vacuum pans, 274

MACERATION, 177
— beet, 435, 773
— evaporation entailed by, 188, 193
— fuel used in, 187
— interest account, 189
— juice left in begass, 187
— labour account, 187
— loss of sugar in, 187
— working figures, 184
Machining beet sugar, 497
— raw sugar, 569
— time for, 612

Magdeburg beet seed, 394
Magnesia in cane soil, 36
— in char, 716
Maize sugar, 514
Maltose, xxii
Manbré's method, starch sugar, 558
Mangold fly, 419
Manila sugar, 823
Manlove's cane slicer, 201
— — sugar factory, 353
— char kiln, 598
— combination type granulator, 645
— diffusion plant, 201
— — vessel, 204
— hydraulic attachment, 157
— juice heater, 214
— rum distillery, 764
— steam clarifier, 218, 266
— sulphurous acid plant, 240
— 3-roller cane mill, 157
— triple effect, 282
— vacuum pan, 259
Manoury's process, beet molasses, 506
Manure, lime scums as, 482
Manures, action on cane crops, 40
— beet, 408
— cane, 32, 38–48
Maple, climate for, 382
— sap, boiling, 384
— — rising, 382
— soil for, 383
— sugar, 380
— — Canadian, 387
— — crop, 386
— — production, 388, 390
— — Tinkor's method, 387
— tapping, 383
Maracabo cane, 6
Margueritte's process, beet molasses, 509
Marie's begass furnace, 169, 350
Martinique, sugar in, 845
Massecuite, curing, 269, 608
— analyses, 500
— washing, 581
Mastodon cane, 520
Mathée and Scheibler's cube-cutting machine, 640
Matthiessen's method of filling moulds, 623
Mauritius cane, 10
— — juice, 101, 115
— — yields, 99
— sugar, 846
Mechanical filtration, 488
Megass. *See* Begass.
Melanconium, 98
Mellado sugar, 797
Melón sugar, 391
Melting raw sugar, 582
Mexico, sugar in, 818
Milk of lime for beet juice, 471
— — — — cane-juice, 221
— — — lime in, 472
— — — preparing, 223
— sugar, xxi
Miller's process for amorphous sugar, 306
Millet, 514
Mill juice, analysis, 113
Mills, cane, 121, 132, 311
— pug, 495
— sorghum, 525
Mineral constituents of commercial sugars, 712
— matters in cane-juice, 108
Mirrlees' 4-roller cane mill, 153
Mitchell's diffusion, 199
Mixers, 342
Moat irrigation, 67
Model factory, small, 353
Moist sugar, 607
Moisture, determination, 675, 714
— in char, 714
Molasses, 271, 360, 753
— analyses, 500, 781
— beet, 499–501, 781
— fermenting, 753
— purifying, 645
— recovery of sugar from, 501
— rum from, 755
— salts in beet, 510
— tempering, 272
— yield, 303
— — of rum from, 757
Mongoose, 87
Monte-jus, 201, 470, 483
Montserrat, sugar in, 837
Moth-borer, 90
Motors, 160
Moulded cube sugar, 622
Moulding canes, 77
Mould plate, 639
Moulds, 623
Moyrahs, 373
Muffle furnace, 237, 240
Multiple effects, 279, 327
— — liquor level control in, 332
Multitubular drum, removable, 328
Muscate bean, 49
Muscovado sugar, 378
Mysore canes, 6

NATAL sugar, 819
National cane-shredder, 176
Native cane crushing, cost, 132
Naudet's diffusion process, 206
Naumann's kiln, 480
Naund dulloah sugar, 373
Nebraska maple sugar, 389
Negundo aceroides, 389

Negundo fraxinifolium, 389
Nepal cane, 5
Net sugar, 676
Neutralising acid in starch sugar, 526
Newhall's granulator, 346
Newlanite, 244
Nicol's prism, 695
Nine-roller cane mill, 157, 318
Nipa fruticans, 361
— palm, 361
Nitrate of soda for canes, 40, 41, 42
Nitrates for beet, 409
Nitric acid for removing mineral matters from char, 665
Nitrogen for beet, 409
— in char, 728
Nitrogenous matters in cane-juice, 111
— — in grain, 532
— — in sugar, 668
Non-nitrogenous matters in sugar, 668
Norfolk beet, 403
North China cane, 514
Northern rose-grey beet, 398

OBJECTIONS to cracking, 225
Obscuration in rum, 770
Odours from char burning, 664
Ohlendorff's manures for canes, 42, 44
Open fire-heated pans, 249
— pans, inversion caused by, 251
— steam pans, 327
— top juice heater, 215, 323
Optical methods of analysis, 695
Organic acids in sugar, 668
— matters in cane-juice, 110
— — in char, 717
— substances as purifying agents, 653
Oscillation of centrifugals, 615, 619
Osmogene, 502
Osmose of molasses, 502
Osmosis, 195
Otaheite cane, 2
— ribbon cane, 3
Oura cane, 9
Oxidising agents, 648
Ozone, 486, 647

PACIFIC Islands sugar, 819–822
Packard's ehrmannite, 245
Palm juice, boiling, 371
— — collecting, 365
— sugar, 361
— — cost, 375
— — history, 376
— — yields, 374
Palmyra palm, 361
Palo Alto clarification, 227
Pans, compressed steam, 288
— heated by steam, 251
— open fire-heated, 249, 371
— — steam-heated, 251, 327
Paper making, begass for, 196
Patrick's carbonic acid process for char, 665
Pattaputti cane, 6
Patterson's centrifugal, 576
— process, sugar analysis, 681
Payen's process, starch sugar, 555
— — sugar analysis, 677
Pearl millet, 514
Peat for filtration, 248
Pea vines as green manure, 50
Pélé, 306
Pellet and Lomont's beet rasper, 427
Perfect sand filter, 491
Perier and Possoz's saturation, 474
Permanganate as an aid to sulphurous acid, 240
Permeable grain, conversion, 531
Peronospora on beet, 420
Peroxides as purifying agents, 648
Peru, sugar in, 822
Peruvian factory, 357
Phalœna saccharalis, 89
Philippine cane-juice, 102
Philippines, sugar in, 823
Phillip's char revivification, 666
Phœnix sylvestris, 361
Phosphates for beet, 409
— for cane, 41
Phosphoric acid as a defecant, 244
— — for purifying char, 665
— — in char, 716
— — in fermentation, 754
— — in refining, 585
Phosphosulphites for defecating, 243
Piavere cane, 9
Pieces, boiling, 607
Pigeon pea, 98
— — for green soiling cane, 49, 50
Pine-apple disease of cane, 98
Pipe kilns, 598
— line for beet juice, 427
Pipes for irrigation, 68
Planting cane, 74
— date palms, 363
Ploughing for beet, 407
Plusia gamma, 419
Polarimeters, 695
Polariscopes, 695
— degrees, 704
Polarised light, 695
Pontifex and Wood's condensers for vacuum pans, 267
Pontifex's pan, 255
— rum stills, 762
— still house, 768
Pooree cane, 5

Porak's sulphurous acid process, 242
Porosity of char, 725
Portemout's continuous centrifugal, 613
Porto Rico, sugar in, 843
Possoz's beet rasper, 424
— carbonic acid gas tester, 476
Potash, digesting char with, 666
— for canes, 41
— in molasses and sugars, 510
— permanganate as a defecant, 240
— salts for beet, 410
— — in beet disease, 419
Potli, 852
Pou à poche blanche, 88
— blanc, 88
Prager Maschinenbau Co.'s diffuser, 445
Prangey and Grobert's phosphosulphites for defecating, 243
Preparation of sugar from cane, synopsis of operations, 120
Preparing milk of lime, 223
Press filters, 483
Pressed cube sugar, 634
Presses for beet, 435
— — — pulp, 451
Pressing beet slices for cattle food, 451
— lime scums, 238, 423
Pressure, adjusting, in cane mills, 154
— boiling under, 288
— in cane mills, 144
Prices of beet, 422
Principles of crystallisation, 269
Proceras sacchariphagus, 89
Production of beet sugar in Europe, 825
— of sugar, 785
Products from lime scums, valuable, 482
Proof spirit, 783, 784
— stick, 264
Propagating cane, 68
— — from seed, 71
Proportion of lime for beet juice, 473
— — — for cane-juice, 270
Pug mill, 343, 495
Pulp drier, 454
Pulsometers, 210
Pulvinaria gasterapha, 88
Pumping sulphurous acid into cane-juice, 237, 241–2
Pumps and substitutes, 207
— for beet juice, 428
— for sulphurous acid, 237
Puolleæ cane, 10
Purchase of beet, 422
Purification processes, 647
Purifying rum, 769
Purple Indian cane, 5
— striped cane, 3
— violet cane, 3
Putrid fermentation, 742
Puvrez's filter, 489
Pzillas's cube sugar, 639
Quarez's sulphurous acid plant, 242
Queensland cane-juice, 102
— — yields, 100
— sugar in, 785
— Quicklime for beet juice, 470
— for cane-juice, 223

Raab, 852
Raffinose, xx, 688
Rain, effect on cane, 28
Raising water, 64
Range of canes, 27
Ransome's begass furnace, 169
Ranson's sugar process, 488
Rapid milling, 146
Rasper, beet, 424
Rasping beet, 435, 772
Rassmus's beet slicer, 439
Rath and Bredt's crystallisation process, 610
Ratooning cane, 77
Rats, 87
Raw sugar, 567
— — analysing, 669
— — dissolving, 582
— — machining, 569
— — preparatory treatment, 569
— — solution, purifying, 645
Reboux's continuous saturator, 468
Reburning char, 598, 663
Receivers, 495
Rectifier, 779
Rectifying spirit, 777
Red canes, 5, 15
— maple, 389
— neck beet, 398
Reducing agents for purifying, 649
Reetha fruit, 852
Refinery, 567
— syrups, utilising last, 645
Refining, blow-up, 582
— defecants, 585
— filtering liquors from blow-ups, 586
— processes, 581
— solution of raw sugar, 582
— starch sugar, 564
— sugar, 567
— Weinrich process, 569
Refrigerating apparatus, 291
— syrups, 301
Remmer's wood charcoal filtration, 592
Rendement, 676
Replanting cane, 80
Residues, beet diffusion, 451
Restali cane, 6
Retames, 798
Returner bars, 138
Revivifying char, 598, 663
Revolving kilns, 600
Reynoso's freezing process, 301

Rhyncophorus, 89
Ribbon cane, 2, 9
Rillieux's begass drier, 173
— triple effect, 286
Rind fungus, 97
— of cane, 24
Ritter's washing process, 577
River maple, 389
— water, 65
Robert factory, 201
Robert's beet diffusion, 440
— diffusion, 201
Robertson's high pressure steam defecator, 227
Rock maple, 380
Röhrig and König's pan, 275
Roller mills, 121, 311
Rootlets of beet, 401
Roots of cane, 415
Rope tramway for beet, 427
Rössling and Reichardt's process, starch sugar, 559
Rotation of crops with cane, 50
Rot of cane, black, 99
Roth on cane roots, 15
Round mats, 86
Rousselot's 3-roller cane mill, 138
— mill, Chapman's improved, 140
Rum, 729, 753
— analyses, 771–2
— colouring, 769
— commerce, 770
— distillery, 764
— distilling, 757
— fermenting molasses, 757
— molasses, 753, 755
— obscuration, 770
— purifying, 769
— stills, 757
Rurutu cane, 9
Russell and Risien's macerator, 180
Russia, sugar in, 823
Russian beet stores, 417
Rust, 94
Rutu cane, 9

SACCHARINE values of beets, 401–4
Saccharometer table, 689
Saccharum, 647
Saguerus saccharifera, 361
Sajji, 852
Saline matters in cane-juice, 108
— soil for canes, 31
Salt for beet, 409
— land, curing, 31
Salts in beet molasses, 510
— in beetroots, 400
— in sugar, 668
— in syrup, by density, 109
Samples for analysis, 668
Sampling beet juice, 422
Samuri lahina cane, 10
San Domingo sugar, 844
Sand filters, 335, 491
Sandwich Islands, cane yield, 100
— — sugar, 820
Sandy soil for canes, 20
Sap rising in maples, 381
— vessels in canes, 23
Saturating cane-juice with sulphuric acid, 460
Saturation pans, 466
Saturator, Reboux's continuous, 468
Save-all, 339
Sawdust, filtering through, 592
Schack-Sommer on beet-growing, 403
Sheibler's calcimeter, 718
— strontia process, beet molasses, 507
Schmidt and Haensch's polariscope, 702
Schroeder's pan, 253
Schutzenbach's beet macerator, 461
Scum presses, 239, 326, 483
Sea air, effect on cane, 27
Second sugars, 497
Seed, beet, 414
— cane, 72
Seedling canes, 73
Selangore cane, 8, 12
Selecting canes, 15
Self-acting condense box, 217
Selwig and Lange's beet pulp press, 452
Sereh, 95
Series of clarifiers, 218
Setæ, 8
Setting out cane cuttings, 76
Settling "cracked" juice, 225
— liquor in char cistern, 594
Seyferth's process, beet molasses, 505
Shaw's apparatus for amorphous sugar, 306
Shier's system of liming juice, 220
— table for lime water, 222
Shot-borer, 90
Sieves, albumen and pulp, 465
Sight glass, 264
Silent spirit, 770
Silesian beet, 393
Silica in begass, 168
Silicious matters in char, 659
Silo for beet, 414, 417, 430
Silpha opaca, 418
Silver maple, 389
— Y moth, 419
Single-germ beet seed, 412
Skimmer, Evrard's, 475
Skimmings, 754
— clarifiers, 214, 325
— cistern, 225, 238
— presses, 239
Skoda's continuous beet pulp press, 451
Slag phosphate as cane manure, 41

Slicer, beet, 436–40
Slicing canes, 200
— machines, cane, 201
Sling, 250
Slow milling, 146
Smut, 97, 98
Society Islands canes, 9
Soda, digesting char with, 666
— permanganate as a defecant, 240
Soft sugars, 607
Soil, air in, 30, 32
— for beet, 406
— for cane, 30
— for date palm, 362
— for maple, 383
— for sorghum, 517
Soleil-Duboscq polariscope, 699
— Ventzke-Scheibler saccharimeter, 701
Solid starch sugar, 524
Soluble ash, determination, 675
Solution of raw sugar, 582
Soondry fuel, 371
Sorghum caffrorum, 514
— Chinese, 517
— cultivation, 514
— early amber, 515
— factory, 520
— frost, effect on, 515
— gooseneck, 520
— Honduras, 520
— in England, 514
— qualities, 514
— saccharatum, 514
— seed, 515, 520
— soil, 520
— sprangle top, 520
— sugar, 514
— — manufacture, 520
— sumach, 519
— thaw, effect on, 515
— varieties, 515
— vulgare, 514
— white Liberian, 520
Sorgo, 514
Sorting cane, 81
Sorts of beet, 396
— of cane, 1
— of sorghum, 514
Sour cane syrup, correcting, 271
Souring char, 666
Sowing beet, 411
Soxhlet's capillair, 564
Spain, sugar in, 825
Special processes, sugar analysis, 677
Specific gravity, finding, 108
— — of char, 724
— rotary power, 703
Specification for wooden cane mill, 133
Speed for centrifugals, 611
— of mill rolls, 313
Sphenophorus sacchari, 89
Spinning raw sugar, 569
— sugar 304, 344
Spirit, proof, 783, 784
— washing sugar, 677
Sprangle top cane, 520
Stammer and Bock's crystallisation in motion, 608
Standard sand filter, 335
Starch, acidulating, 525, 532
— boiling, 524, 560
— stirring tub, 524
— sugar, 521
— — and syrup analyses, 531
— — Anthon's method, 560
— — capillair, 563
— — commercial analysis, 705
— — converters, 533, 557, 558, 560
— — evaporating 528, 561
— — filtering, 527
— — granulated 565
— — in refined sugar, detecting, 709
— — Jebb's process, 538
— — Johnson's process, 531
— — liquid syrup, 530
— — Manbré's method, 558
— — manufacture 522–4
— — market, 524
— — neutralising acid, 526, 561
— — origin, 521
— — Payen's process, 555
— — refining, 528
— — Rössling and Reichardt's process, 559
— — solid, 529
— — — transparent, 564
— — uses, 566
— transformation, 521, 523
Statement of results, sugar analysis, 676
Statistics, 785
Steam clarifiers, 214, 216
— converter, 533
— defecators, 213
— generators, 346
— heated pans, 251, 327
— high pressure, 347
— jacketed clarifier, 216
— out, vacuum-pan, 607
— power cane mills, 137
— required in distilling, 753
— still, 763
— trap, 217
Steaming raw sugar, 569
Steffen's process, beet molasses, 506
— — crystallisation, 610
— washing process, 578
Stewart's continuous centrifugal, 612
— hydraulic attachment to cane mills, 154
— sulphurous acid process, 233
Sticky sugar, correcting, 271

Stills, 746
— rum, 757
Stirring tub, 524
St. Kitts and Nevis, sugar in, 838
St. Lucia, sugar in, 836
Stoning beet, 431
Stool, cane, 78
Storing beet, 416
Straining cane juice, 211, 322
Straits canes, 8
Straw-coloured cane, 2
Striking a "teach," 250
— point, 251, 270
— teach, 249
String proof, 499
Striped cane, 15
Strontia process, beet molasses, 504, 507
Structure of cane, 15
St. Vincent, sugar in, 836
Subsiders, 236, 326
Sucrate of hydrocarbonate of lime process, beet molasses, 508
— of lime for cane-juice, 223
Sucrates, 652
Sucrose, xv
Sugar, amorphous, 306
— analyses, 500
— basket, 306
— beet. *See* Beet.
— breaker, 359
— cane. *See* Cane.
— comparative cost in France and Germany, 405
— coolers, 359
— curing, 495
— determination of, 669
— in beetroots, 401
— in cane, 33
— in fruits, xvi
— in syrup, by density, 107, 689
— inversion, 251, 645, 682
— liquor, effect of heat on, 251
— loaf, 619
— maple, 380
— melon, 391
— nett, 676
— of lead as a defecant, 244
— palm, 361
— premier jet, 497
— recovery from molasses, 501
— refining, 567
— sampling, 669
— systematic washing, 577
— washing raw, 569
— — yields, 579
— yields, beet, 497
— — cane, 98
Sugars, first, second and third, 497
Sulphate ammonia for beet, 409
— — for canes, 40, 41, 42
Sulphate of alumina in refining, 585
Sulphide of iron in kiln pipes, 666
Sulphides in char, 721
Sulphite of lime for cane-juice, 233
Sulphites in fermentation, 753
Sulphos, 243
Sulphur burner, 237
— consumption in defecating, 238–9
Sulphuric acid and crystallisation, 239
— — for defecating, 460
— — for inverting, 645
— — for yellow crystals, 270
— — in char, 659, 721
Sulphurous acid, action of, 239
— — for beet juice, 474, 489
— — for cane-juice, 233
— — pumping into cane-juice, 237, 241, 242
— — pumps, 237
— — volume, 238
— — gas, generating, 237
Sumach cane, 519
Superheated steam for revivifying char, 664
Superphosphate for beet, 409
— for canes, 41
Surface condensation in vacuum pans, 266
Swamp maple, 389
Sweden, sugar in, 855
Synopsis of operations, 120
Syrup, cleaning before passing into the effect, 277
— cooler, 553
— decolorising, 529, 592
— effect of heat on, 229, 251
— freezing, 301
— golden, 645
— pumps, 207
— yield, melon, 391
Syrups, utilising final refinery, 645

TABLE of alcoholic percentages, 732
— of cane-juice analyses, 101–3
— of sugars and salts in syrup, 113
— of sugar in juice, by density, 109
Taches, 249
Tanna canes, black, 27
Tapping maples, 383
— palms, 364
Tayches, 249
Taylor filters, 489, 586, 591
Teaches, 249
Temperature, action on starch, 521
— in diffusion, 441, 449
— in triple effects, 330
Tempering cane-juice, 226
— for colour, 246
— molasses, 272
Test for reburnt char, 664
— for starch and dextrine, 535

Test of striking point, 251, 269
Testing cane-juice, 107, 224
— carbonic acid gas, 476
— char washing, 597
— new sorts of cane, 14, 71
Thaw, effect on cane, 28
— — on sorghum, 515
Thielaviopsis ethaceticus, 98
Third sugars, 297
Thomas phosphate, 41
Thomas's beet rasping drum, 427
Thomson and Black's 5-roller mill, 153
— and Mylne's cane mill, 127
Three-roller cane mill, 127, 134
Tibboo batavee cane, 4
— bittong beraboo cane, 8
— cappor cane, 8
— etam cane, 4
— merah cane, 5
Tietz, Selwig, and Lange's cubes, 624
Tillage of cane soils, 31
Time for boiling crystals, 607
— for machining, 612
Tin chloride, 247
Tinkor's method for maple sugar, 387
Tintometer, 727, 770
To-Aeho canes, 10
— Patu cane, 10
— Uti cane, 9
Tobago, sugar in, 835
Toggle lever in cane mills, 159
Toisoul and Fradet's lime kiln, 480
Tomarus bitubercalatus, 89
Torricellian tube, 335
Trade in sugar, 785
Tramways, 81, 427
Transition tint polariscopes, 699
Transparent ribbon cane, 4
Transporting beet, 427
— cane, 81
— sorghum, 525
— sugar, 246
Trash as fuel, 310
— as manure, 45
— turner, 312
Trashing cane, 77
Treacle, 645
Trinidad, sugar in, 835
Trinks's lime scum press, 483
Triple effects, 279, 329
— — Chapman's circulators for, 280
— — incrustation in, 331
— — labour for, 282
— — vertical and horizontal, 281
Tropical sugar factory, 309
Trotzer, 400
Twaddell's hydrometer, 107
Two-roller mill, 126
Types of sugar beets, 397

UNCRYSTALLISABLE sugar in cane juice, 104
Undried begass furnace, 169
United Kingdom sugar in, 827
United States crystalliser, 609
— — sugar, 830
Unripe beet, 416
— cane juice, 102
Uouo cane, 9
Upward filtration through char, 663
Uruguay, sugar in, 833
Uses of starch sugar, 566
Usinas, 797
Ustilago sacchari, 98

VACUUM chest, 304
— pan, 258, 273, 337
— — coils, 273, 275
— — condensers for, 263
— — construction of, 273
— — cutting, 607
— — entrainment, 268
— — forms of, 274
— — graining in, 268
— — low pressure, 274
— — multiple effect, 279, 327
— — novel, 275
— — save-all, 265
— — slide, 264
— — steam-out, 607
— — surface condensation, 266
— — working, 268, 606
— — worms, 340
— pump, 335–6
Vaihi-uouo cane, 9
Van Trescow's steam defecation, 227
Vapours from char burning, 601
— — irrigated land, 65
Varieties of beet, 396
— of cane, 1
— of sorghum, 515
Venezuela sugar, 849
Verley's ozone process, 486
Vertical beam engine, 161
— cane mill, 123
— vacuum pan, 259
Vibration of centrifugals, 615, 619
Vide-jus, 285, 333
Vilmorin's beet seed, 394
— improved white beet, 398
Vinasse, 501
Vine maple, 389
Violet Selangore cane, 13
Viscous fermentation, 742
Volume of sulphurous acid, 238

WAGNER's depulper, 465
Walker and Patterson's centrifugal, 576
— — — cubes, 629

Walkhoff's revolving beet juice extractor, 435
Warner's diffusion, 199
Wash, ingredients of, 755
Washing bags, 589
— beet, 432
— char, 595
— raw sugar, 569
— sugar, systematic, 577
— — yields, 579
Water, application to land, 64
— conducting, 67
— contents, 65
— determination, 675, 714
— driven centrifugals, 345, 573
— for cane diffusion, 195
— from wet char, removing, 599
— heater, 595
— in cane-juice, 103
— maple, 389
— melon, 391
— power cane mills, 161
— raising, 65
— wheel and cane mill, 128
Watson and Laidlaw's centrifugals, 573–4
Weeding cane, 77
Weight of char, 659
Weinrich centrifugal, 569
— process, 230, 569, 603
West Indian canes, 10
— — sugar, 833
Weston's centrifugal, 344, 618
Wet begass furnace, 169
Wetzels, 253
Wetzel's pan, 253
White Indian cane, 5
— Liberian sorghum, 520
— maple sugar, 390
— Silesian beet, 393, 397
Whiting batter for cane juice, 237
Wigner and Harland's carbonic acid gas tester, 477
Wild canes, 1
— date palm, 361
Windmills, 161
Windrowing cane, 85
Wire tramways, 81
— web strainer, 211
Wolf on forms of vacuum pan, 274
Wood charcoal, filtering through, 592
Wooden cane mill, 128
— — — cost, 133
Woods for making cane mill, 131
Woody fibre in cane, 316
Working a cane sugar factory, cost of, 190
— vacuum pan, 268, 606
World's sugar production, 785
Worms, 98
— of vacuum pan, 340
Wringing machines, 589

YARYAN evaporator, 606
Yellow cane, 2
— crystals, 246, 270
— Otaheite cane, 11
— violet cane, 3
Yield, alcohol from molasses, 781
— beet sugar, 497
— cane, 98–100
— — juice, 100, 156, 161, 318
— maple sugar, 383
— palm sugar, 374
— washing sugar, 579

ZEA mays, 514
Zyleborus perforans, 90

LONDON: PRINTED BY WILLIAM CLOWES AND SONS, LIMITED,
GREAT WINDMILL STREET, W., AND DUKE STREET, STAMFORD STREET, S.E.

Sugar Defecator

NEWLANITE

(Patent Dry Phosphoric Acid)

THE UP-TO-DATE DEFECATOR

More economical and efficient in use than any other defecator on the market

WRITE AT ONCE FOR FULL PARTICULARS TO THE MANUFACTURERS,

A. BOAKE, ROBERTS & CO., LTD

Stratford, London, England

JOHN McNEIL & Co.

Colonial Iron Works

ENGINEERING EMPLOYERS' FEDERATION 1896

GOVAN

GLASGOW

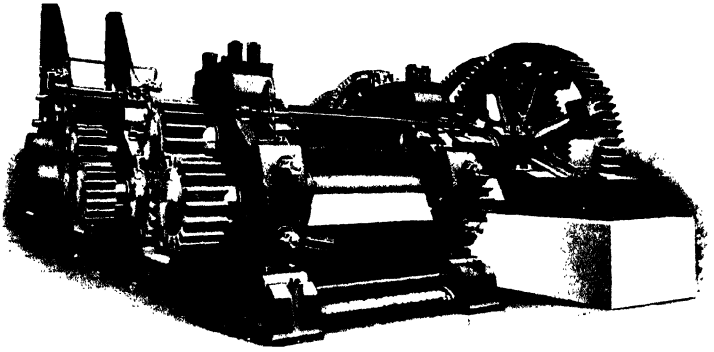

McNEIL'S "DREADNOUGHT" ELEVEN-ROLLER MILL

Rollers, 36 in. dia., 72 in. long;

AS MADE FOR

"WATERLOO" ESTATE, TRINIDAD.

Capacity: 1200 tons per day. Total Weight: 700 tons.

MANUFACTURERS OF COMPLETE

CANE SUGAR FACTORY PLANTS

JOHN McNEIL & Co.

COLONIAL IRON WORKS

GOVAN

GLASGOV

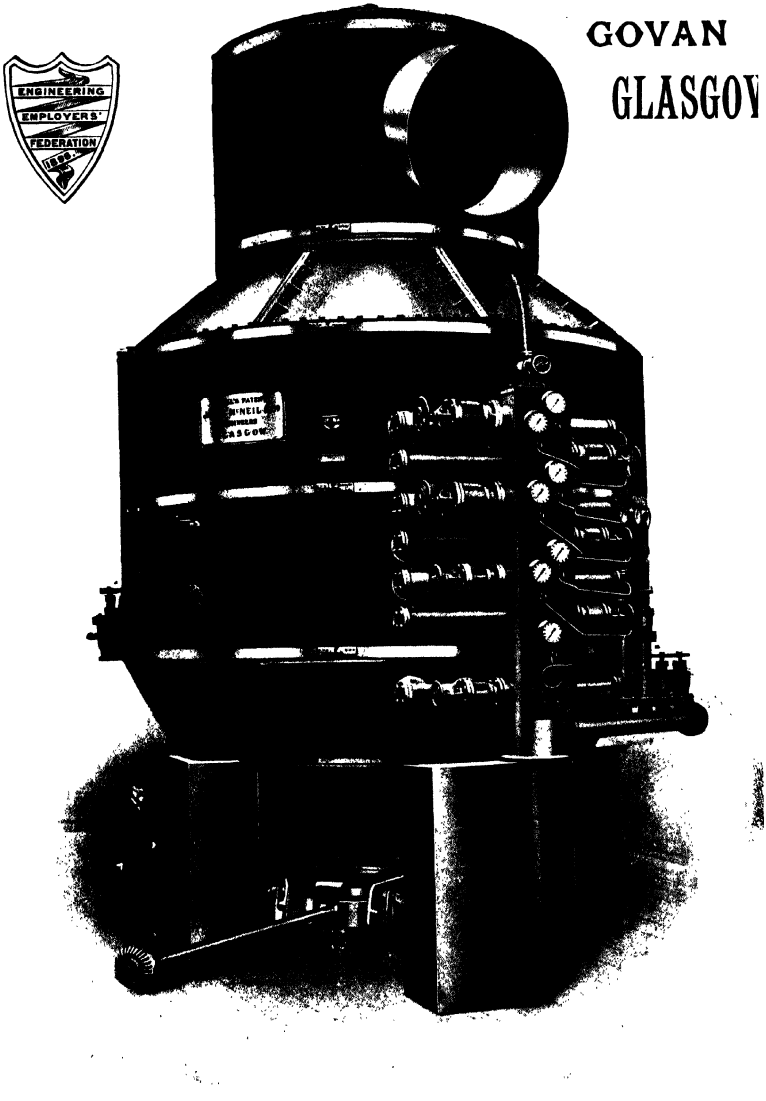

VACUUM PAN, 15 feet dia.

TOWNSON & MERCER

34 Camomile Street and 89 Bishopsgate Street Within

LONDON, E.C.

Telegraphic Address: "TOWNSON, LONDON."

Telephone No.: 2537 LONDON WALL.

CONTRACTORS AND MANUFACTURERS OF ANALYTICAL APPARATUS AND CHEMICALS FOR COMPLETE SUGAR ANALYSIS

SOLE AGENTS IN THE UNITED KINGDOM FOR BECKER'S SONS ROTTERDAM BALANCES AND WEIGHTS.

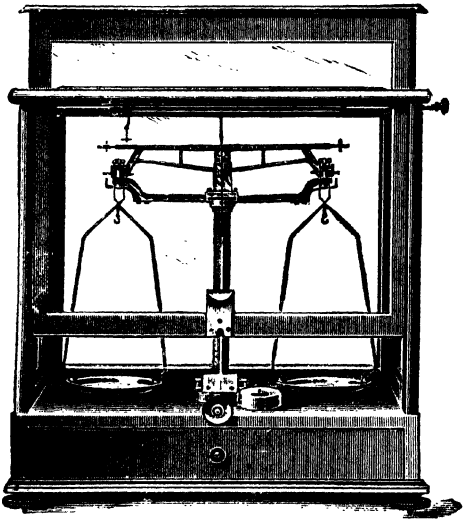

LONDON AGENTS FOR SCHLEICHER & SCHÜLL'S RHENISH FILTER PAPERS, EXTRACTION THIMBLES, ETC.

BALANCES, by Becker's Sons, for Chemical Work, to carry up to 150 grammes in each Pan, sensible to $\frac{2}{10}$ milligramme. Open Beam, graduated both sides, with long Rider Apparatus to serve both sides of the Beam, Agate Knives and Planes, and special arrangement to take weight off knife edges when not in use. In Polished Mahogany Case with Set Screws and Spirit Level, **£5 10s.**

CONTRACTORS TO THE

ROYAL COLLEGE OF SCIENCE AND TECHNOLOGY, S. KENSINGTON and most of the principal Technical Institutes in the United Kingdom.

TOWNSON & MERCER

34 Camomile Street and 89 Bishopsgate Street Within

LONDON, E.C.

Telegraphic Address:
"TOWNSON, LONDON."

Telephone No.:
2537 LONDON WALL.

Contractors
and
Manufacturers of Analytical Apparatus and Chemicals for complete Sugar Analysis

AGENTS FOR SCHMIDT & HAENSCH'S POLARISCOPES & SACCHARIMETERS. ALSO FOR LEITZ & ZEISS MICROSCOPES, ETC.

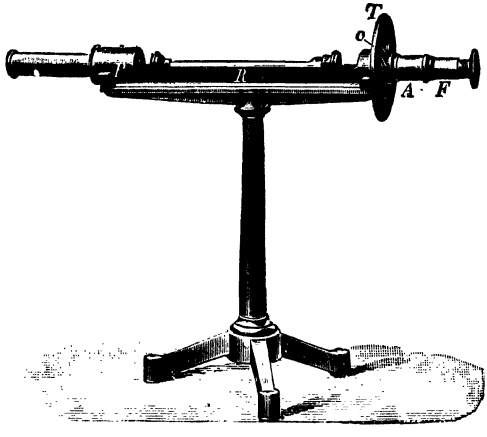

SACCHAROMETERS. HYDROMETERS. NITROMETERS. VACUUM APPARATUS AND OTHER APPARATUS MENTIONED IN THIS BOOK.

CONTRACTORS and MANUFACTURERS of

ANALYTICAL & SCIENTIFIC APPARATUS
TO THE
HOME & COLONIAL GOVERNMENTS.

Pott, Cassels & Williamson

Works: MOTHERWELL, near GLASGOW. *Telegraphic Address:* "POTT, MOTHERWELL."

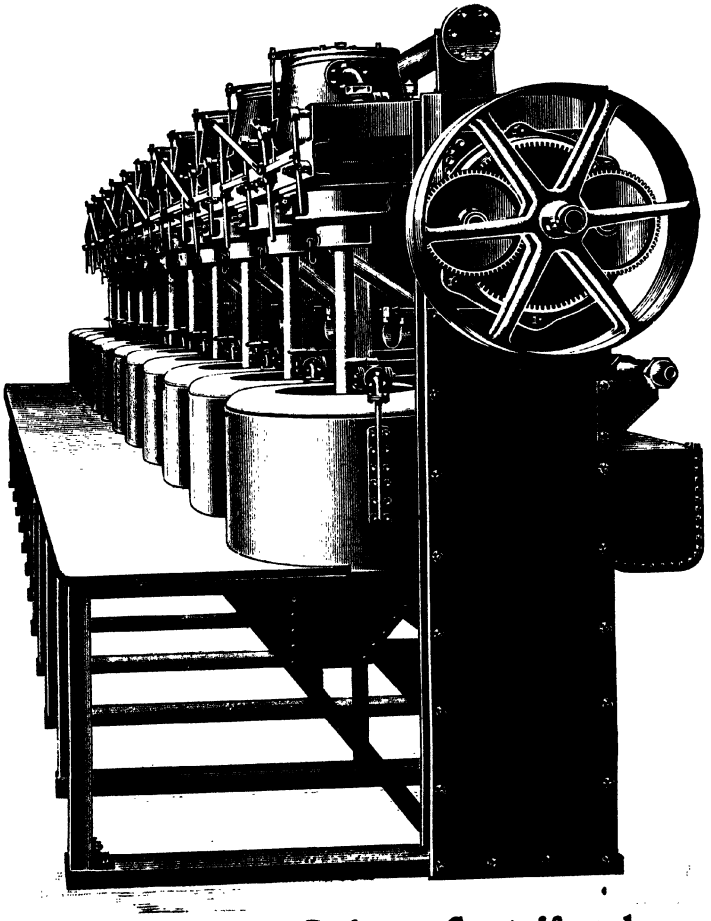

Patent Water-Driven Centrifugals,

with

Patent Interlocking Gear, Detachable Motors,
Automatic Cut-off, Solid Spindles,
Ball Bearings, and Self-adjusting Buffers.

ALSO BELT AND ELECTRIC DRIVEN MACHINES.

FOR SUGAR FACTORIES & REFINERIES

Patent Steel Frame "Weston" Centrifugal Machi

DRIVEN BY

WATER, BELTING, or ELECTRICITY

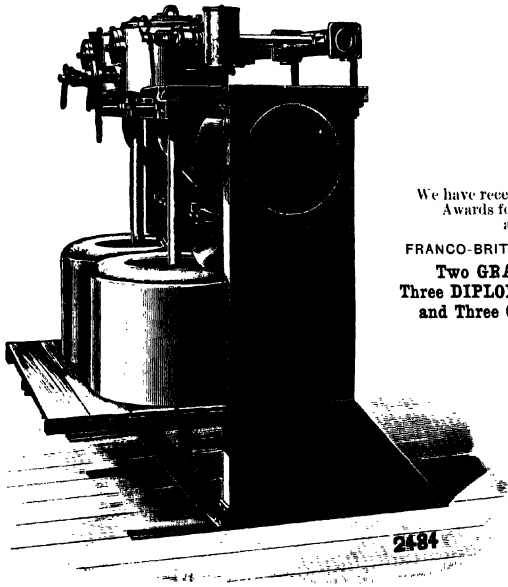

We have received the follo
Awards for our Exhibit
at the
FRANCO-BRITISH EXHIBI
Two GRAND PRIZE
Three DIPLOMAS of HO
and Three GOLD MED

This illustration shows water driving. A similar arrangement serves for driving by belting, or electricity.

PATENTEES & SOLE MANUFACTURERS

WATSON, LAIDLAW & Co., L^D.

ENGINEERS, 98 DUNDAS ST. (SOUTH), GLASGOW.

THOMAS BROADBENT & SONS

LIMITED

CENTRIFUGAL MACHINES FOR SUGAR

BELT-DRIVEN "WESTON" CENTRIFUGALS

(See Illustration on Opposite Page).

STEAM-DRIVEN "WESTON" CENTRIFUGALS

(WITH OR WITHOUT BOILER).

ELECTRICALLY-DRIVEN "WESTON" CENTRIFUGALS.

HAND-POWER "WESTON" CENTRIFUGALS.

HAND-POWER UNDERDRIVEN CENTRIFUGALS.

ALSO OUR WELL-KNOWN

SUSPENDED DIRECT STEAM & ELECTRICALLY-DRIVEN CENTRIFUGAL MACHINES OR HYDRO EXTRACTORS.

SEND FOR CATALOGUE

CENTRAL IRONWORKS:

HUDDERSFIELD

THOMAS BROADBENT & SONS

LIMITED

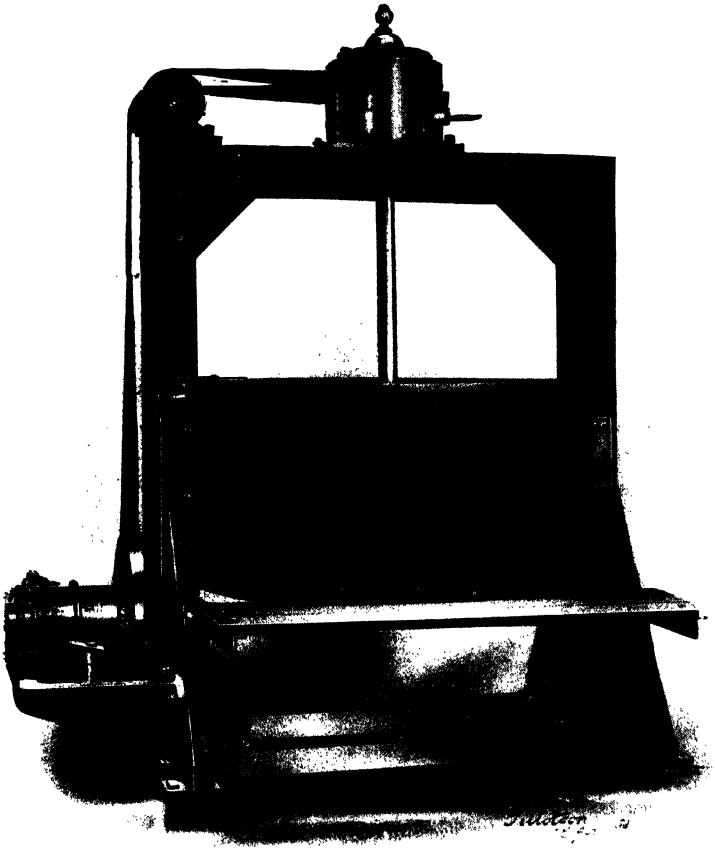

Type No. 14

CENTRAL IRONWORKS:

HUDDERSFIELD

CANE MILLS and CRUSHERS

of improved system.

Cane and Bagasse Carriers.

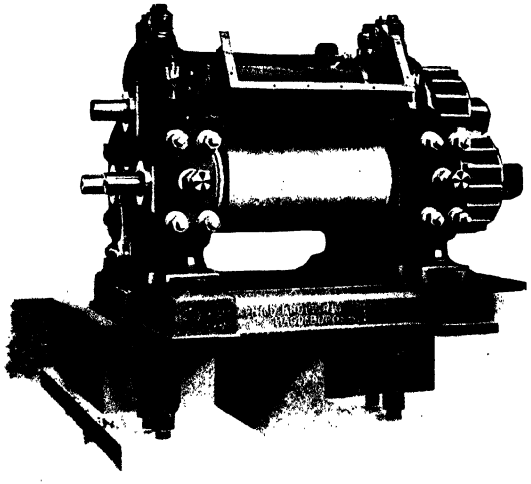

FRIED. KRUPP A.-G.
GRUSONWERK

Magdeburg-Buckau (Germany)

SOLE AGENT FOR U.K.:

W. STAMM, 25 College Hill, London, E.C.

BLAKE, BARCLAY & CO.

SUGAR REFINERY
DESIGNERS & ENGINEERS

GREENOCK

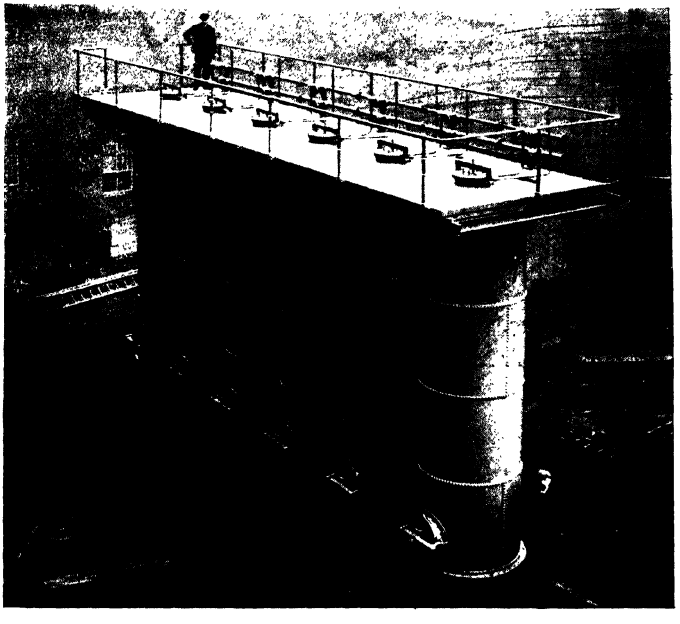

We have designed and erected Sugar Refining Plants in all parts of the world, of capacities from 5 to 5000 tons per week.

PACKARD'S

SUGAR CANE MANURES

Full Particulars of Analysis. *Price on application.*

EHRMANN

PATENT SUGAR PROCESS

PATENT

Registered Trade Mark.

EHRMANNITE.
EHRMANNITE.

E. PACKARD & CO. are Sole Agents for the Proprietors of the above Patent for France and Spain and their Colonies, Brazil, West Indian Colonies, &c., and are the Patentees and SOLE MAKERS of Ehrmannite.

PACKARD'S PATENT SUPERPHOSPHATES

AND SOLID PHOSPHORIC ACID.

(PACKARD'S PATENTS.)

E. PACKARD & CO., LTD.

155 Fenchurch Street, London.

SUGAR MACHINERY

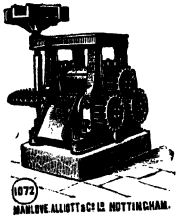

Cattle-driven Mill.

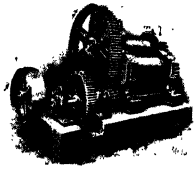

Belt-driven Mill.

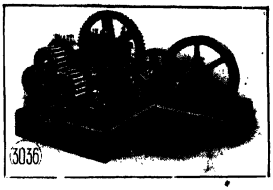

Steam-driven "Compound" Mill.

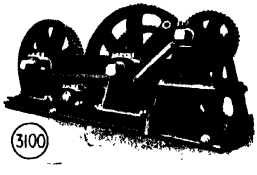

Compound Gearing for 8-Roll Mill.

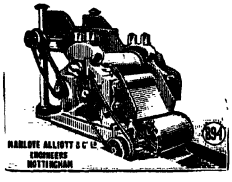

3-Roll Mill, Cane and Megass Carriers.

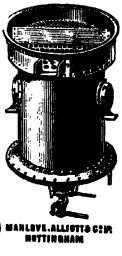

Tubular Juice Heater.

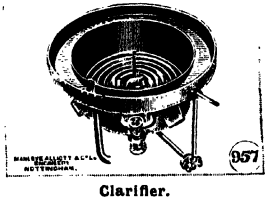

Clarifier.

Filter Press

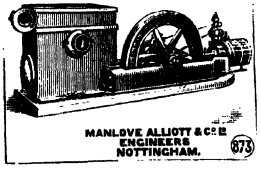

Vacuum Pump.

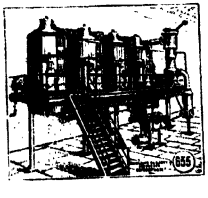

Multiple Effect.

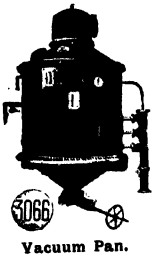

Vacuum Pan.

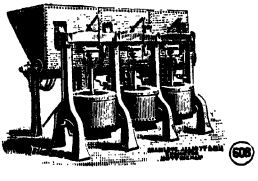

Mixers and Centrifugals.

MANLOVE, ALLIOTT & CO., LTD.

ENGINEERS, NOTTINGHAM, ENGLAND.

DRAWING INSTRUMENTS

British Made by British Labour.

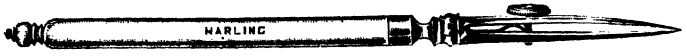

DRAWING PENS. 26 Qualities. 1/4, 1/8, 2/-, 2/6, 3/3, 4/-, &c.

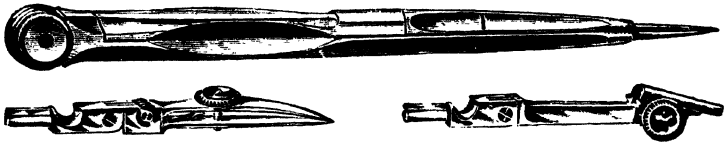

COMPASSES, HALF SETS. 35 Qualities. 5/d, 6/6, 8/6, 10/-, 15/-, 19/-, &c.

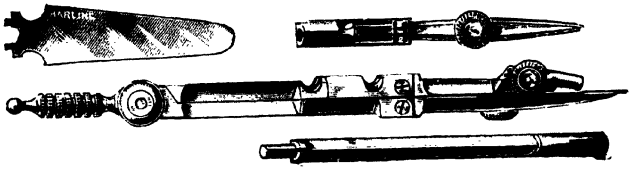

BOW HALF SETS. 5 Qualities. 5/-, 8/6, 10/6, 12/6, 15/-.

SPRING BOWS.

Needle Points, Ink or Pencil, 3/4, 4/-, 4/10, each.

THE ENGINEER'S PORTABLE POCKET-CASE, 2/6.

This Case can be supplied complete with:

Half Set: 2 Bows, 2 Spring Bows and Drawing Pen, at 18/6, 24/-, 55/-, or fitted to customers' requirements.

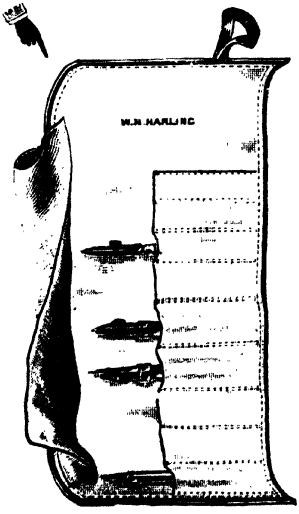

SPRING BOWS.

Plain Points Ink or Pencil, 1/10, 2/8, 3/2, each.

W. H. HARLING

Mathematical, Drawing & Surveying Instrument Manufacturer

47 & 49 FINSBURY PAVEMENT, LONDON, E.C.

AND GROSVENOR WORKS, HACKNEY.

Established 1851. Illustrated Catalogue on Request

John Joseph Eastick, ***Analytical and Consulting Chemist; Associate (Metallurgy), Royal School of Mines, London; Fellow, Institute of Chemistry, & Chemical Society; Member, Society of Chemical Industry.***

TECHNICAL ADVICE and assistance given in all matters connected with the Refining of Sugar, and the Manufacture of Raw Sugars, Rum, Glucose, and Animal Charcoal, including the selection and arrangement of plant. Inclusive annual fee as Consulting Expert. Analyses of Sugars, Syrups, Charcoal, Soils, Manures and Waters undertaken, and Instruction given in analyses and methods of chemical control.

Twelve years' experience in London Refineries.

Sixteen years' experience in Colonial Refineries, Raw Sugar Mills, Plantations, and Distilleries.

Laboratory, 2 St. Dunstan's Hill, London, E.C.

Telegraphic Add.: "Charolar, London."

A B C code used.

BLAIR, CAMPBELL & McLEAN, L[D]

WOODVILLE STREET,

GOVAN, GLASGOW.

Telegraphic Address: "BLAZON, GLASGOW." Established 1838.

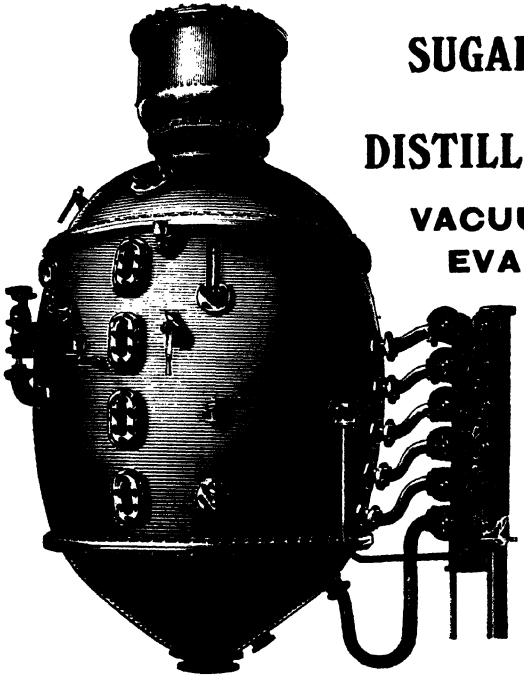

SUGAR-BOILING
AND
DISTILLERY PLANT

VACUUM PANS & EVAPORATORS

OPEN SUGAR PANS,

CLARIFIERS,

DEFECATORS,

ELIMINATORS,

&c.

BLAIR'S PATENT CONTINUOUS-WORKING STEAM STILLS

To produce Rum and Alcohol of finest quality in one operation.

COFFEY'S PATENT STEAM STILLS

With BLAIR'S PATENTED IMPROVEMENTS,

Giving highest efficiency, and reducing greatly the cost of working and upkeep.

POT STILLS, for Direct Fire and Steam Jacketed.

MANUFACTURED COPPER and BRASS WORK of every description,
For Sugar Works and Refineries.

COPPER HEATING & COOLING COILS. GUN-METAL MOLASSES & DISTILLERY PUMPS.

THE

BREITFELD-DANĚK

Engineering Company

PRAGUE (AUSTRIA, BOHEMIA) Paid-up Capital - **10,000,000 Kronen**

4 FACTORIES 150 ENGINEERS 5000 WORKMEN

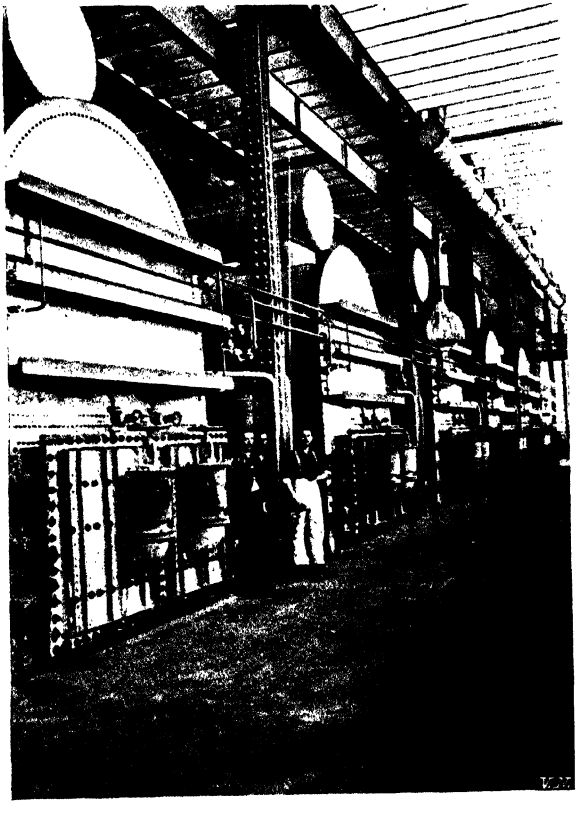

MANUFACTURERS OF ALL KINDS OF THE MOST UP-TO-DATE

MACHINERY FOR THE CANE AND BEET SUGAR INDUSTRY

INFORMATION and ESTIMATES upon application

Telegraphic Address: "BREITDANEK, PRAGUE."

Codes used: A B C (4th and 5th Editions); A—Z Code (French) Engineering; Western Union; Combinaison Piéron.

Telegraphic Address:
MELADA, GLASGOW.

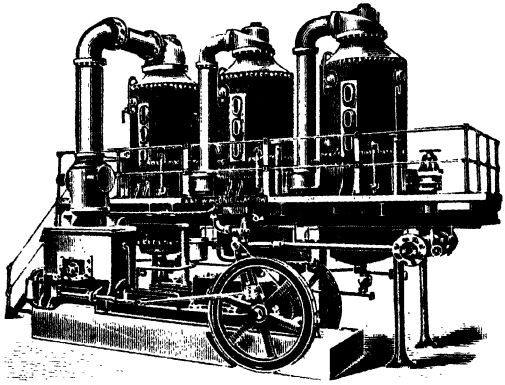

CODES
ENG NEERING.
A1 ...d LIEBER'S.
A B C (4th & 5th Edi
PRIVATE CODE.

A. & P. W. McONIE

CESSNOCK ENGINE WORKS

Govan, GLASGOW

London Office: CHESTERFIELD HOUSE, 98 GREAT TOWER STREET, E.C.

MANUFACTURERS OF

DOUBLE & TRIPLE CRUSHING MILLS. ENGINES & BOILERS.
CANE CARRIERS. CANE JUICE HEATERS. DEFECATORS.
SULPHURATION APPARATUS. SUBSIDERS & ELIMINATORS.
TRIPLE & QUADRUPLE EFFET EVAPORATORS. PLATFORMS.
VACUUM PANS, with JET or TORRICELLIAN CONDENSERS.
JUICE & SCUM FILTERS. ASPINAL, WETZEL, & BOUR PANS.
DRY SLIDE VALVE AIR PUMPS & PUMPING ENGINES.

And all Requirements for Sugar Estates and Refineries.

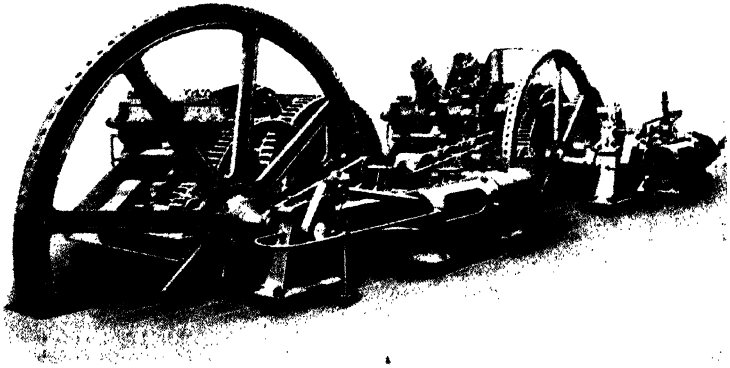

GEBR. STORK & Co.

HENGELO (O), HOLLAND.

Tel. Address: "GIETERY, HENGELO (Overysel)."

Agent in Java:
R. VERBEEK
Soerabaya.

Agent in Cuba:
J. S. LATOUR
Apartado 1198, Habana.

Makers of

ALL KINDS OF

SUGAR MACHINERY

COMPLETE INSTALLATIONS

FOR SUGAR FACTORIES,

Including Constructive Work for Buildings.

STEAM BOILERS and ENGINES

For Land and Marine Use.

ELECTRIC and HAND CRANES

TRANSMISSIONS and GEARING

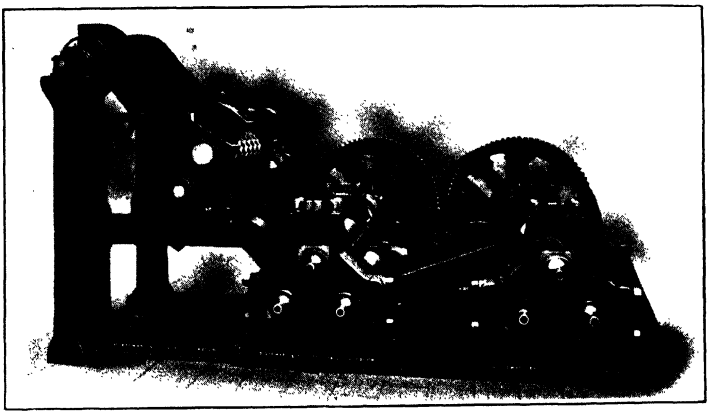

EIGHT-ROLLER CRUSHING PLANT

D. STEWART & CO.

(1902) LIMITED

LONDON ROAD IRONWORKS

ESTABLISHED 1864.

GLASGOW

Cable Address: "STEWART, Glasgow."

MANUFACTURERS OF

SUGAR MACHINERY

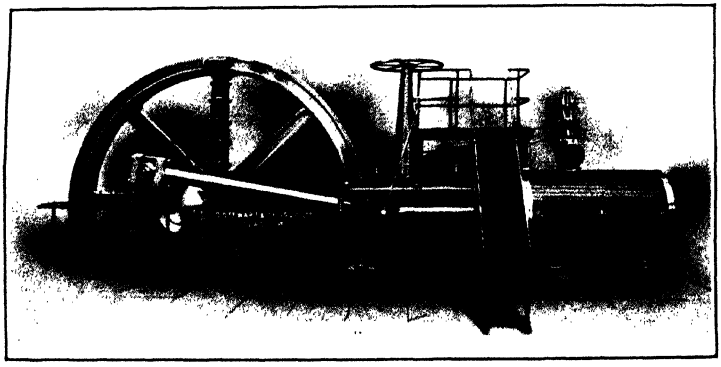

HORIZONTAL REVERSING STEAM ENGINE, to drive above Milling Plant.

PATERSON FILTERS

PATERSON QUARTZ SAND FILTERS are the best for effecting the clarification of Sugar Liquor, and offer the following advantages:—

1. The Filtering Medium—Quartz Sand—is indestructible, and lasts for many years.
2. The Cleansing Process is effected by compressed air which thoroughly scours the quartz sand and aerates it.
3. The Filter is self-regulating, automatically controlling the speed of filtration.

X Write for a Copy of the Paterson Red Book on Water Softening & Purifying.

"*This is no ordinary Catalogue.*"—ENGINEER.

WE ALSO SPECIALISE IN

WATER FILTERS, SOFTENERS, HEATERS, & OIL ELIMINATORS.

THE PATERSON ENGINEERING CO., LTD.

38 Amberley House, Norfolk Street, Strand, London.

TWO NEW BOOKS

SECOND EDITION.

With 61 Illustrations, 271 pages, cloth. Price **4/10** *net post-free.*

A PRACTICAL HANDBOOK ON THE DISTILLATION OF ALCOHOL from Farm Products, including the Processes of Malting, Mashing and Macerating, Fermenting and Distilling Alcohol from Grain, Beets, Potatoes, Molasses, &c., with Chapters on Alcoholometry and the De-naturing of Alcohol for use in Farm Engines, Automobiles, &c. By F. B. WRIGHT.

New Finsbury Technical Manual.

With 110 Illustrations, 430 pages, 8vo, cloth. Price **13/-** *net post-free.*

HEAT FOR ENGINEERS. A Treatise on Heat, with special regard to its Practical Applications. By CHARLES R. DARLING, A.R.Sc. Dublin; Whitworth Exhibitioner; F.I.C., &c.; Demonstrator in the Department of Applied Physics and Electrical Engineering and Lecturer on Heat at the City and Guilds Technical College, Finsbury.

LONDON: E. & F. N. SPON, Ltd., 57 HAYMARKET, S.W.

And of all Booksellers throughout the World.

THE PHOSPHOR-BRONZE CO.

LIMITED

87 Sumner St., Southwark, London, S.E.

And Chester Street, Aston, Birmingham.

"COG WHEEL BRAND"

(Registered Trade Mark)

PHOSPHOR-BRONZE CASTING ALLOYS

All Ingots bear the Company's Name, the Cog Wheel Trade Mark, and the number or letters indicating the Alloy.

PHOSPHOR-BRONZE ALLOYS ("Cog Wheel Brand")

Alloy No.

I. or **II.** For **Pinions, Valves, High-pressure Steam** and **Boiler Fittings, Pumps, Propellers, Stem** and **Stern Posts, Ornamental Castings, Miners' Rammers,** etc., and also various parts of Machinery. This is a very strong Metal of extremely rich colour, and is very superior to Gun Metal for the purposes named.

III. or **V.** These are harder Alloys than No. II., and are suitable for **Cogs, Plungers, Valves, Cylinders,** and large **Pinions** and **Pumps, Worms** and **Worm Wheels, Axle Boxes** for **Carriages, Wagons,** etc., **Bushes** for Paddle Boat Engines, Motor Gearing.

VI. or **VII.** Very hard Alloys for **Piston Rings, Slide Faces, Crank Pin Bearings, Tools for Gunpowder Mills, Worms** and **Worm Wheels, Motor Gearing, Bearings** and **Bushes** for **Steel Shafts Running at Great Velocity.** This Alloy greatly resists the action of acids.

XI. Special "Phosphor-Bronze" **Bearing Metal,** *wears more than six times as long as ordinary Gun Metal,* and is expressly adapted for **Bearings, Slide Valves, Eccentric Straps, Bushes,** and other parts of Machinery exposed to friction under pressure. This Alloy has a world-wide reputation and is generally used, *and consequently largely imitated.*

October, 1910

A SHORT LIST OF
SCIENTIFIC BOOKS

PUBLISHED AND SOLD BY

E. & F. N. SPON, Limited,

57 Haymarket, London, S.W.

SOLE ENGLISH AGENTS for the Books of—

MYRON C. CLARK, NEW YORK
THE BUSINESS CODE COMPANY, CHICAGO
SPON & CHAMBERLAIN, NEW YORK

	PAGE
AERONAUTICS	2
AGRICULTURE	2
ARCHITECTURE	3
ARTILLERY	5
BRIDGES AND ROOFS	5
BUILDING	3
CEMENT AND CONCRETE	7
CIVIL ENGINEERING	8
DICTIONARIES	11
DOMESTIC ECONOMY	12
DRAWING	13
ELECTRICAL ENGINEERING	14
FOREIGN EXCHANGE	19
GAS AND OIL ENGINES	20
GAS LIGHTING	20
HISTORICAL; BIOGRAPHICAL	21
HOROLOGY	22
HYDRAULICS	22
INDUSTRIAL CHEMISTRY	24
IRRIGATION	27
LOGARITHM TABLES	28
MANUFACTURES	24
MARINE ENGINEERING	28
MATERIALS	30
MATHEMATICS	31
MECHANICAL ENGINEERING	33
METALLURGY	36
METRIC TABLES	38
MINERALOGY AND MINING	38
MUNICIPAL ENGINEERING	45
NAVAL ARCHITECTURE	28
ORGANISATION	40
PHYSICS	41
PRICE BOOKS	42
RAILWAY ENGINEERING	43
SANITATION	45
STRUCTURAL DESIGN	5
TELEGRAPH CODES	47
WARMING; VENTILATION	47
WATER SUPPLY	48
WORKSHOP PRACTICE	49
USEFUL TABLES	52
MISCELLANEOUS	53

Full particulars post free on application.
All books are bound in cloth unless otherwise stated.

NOTE:—The Prices in this Catalogue apply to books sold in the United Kingdom only.

AERONAUTICS

The Atmosphere: its characteristics and dynamics. By F. J. B. CORDEIRO. With 35 illus., 129 pp. medium 8vo. (*New York, 1910*) ... ... *net* 10 6

Theory and Practice of Model Aeroplaning. By V. E. JOHNSON. 61 illus. 150 pp. crown 8vo. (*1910*) ... ... *net* 3 6

How to Build a 20-ft. Bi-plane Glider. By A. P. MORGAN. 31 illus. 60 pp. crown 8vo, limp. (S. & C. SERIES, No. 14.) (*New York, 1909*) *net* 1 6

Flight-Velocity. By A. SAMUELSON. 4 plates, 42 pp. 8vo, sewed. (*1906*) ... ... *net* 2 0

Resistance of Air and the Question of Flying. By A. SAMUELSON. 23 illus. 36 pp. 8vo, sewed. (*1905*) ... ... *net* 2 0

AGRICULTURE.

Hemp. A Practical Treatise on the Culture for Seed and Fibre. By S. S. BOYCE. 13 illus. 112 pp. crown 8vo. (*New York, 1900*) ... ... *net* 2 0

The Fertilisation of Tea. By G. A. COWIE. With 17 illus. 68 pp. crown 8vo, sewed. (*1908*) *net* 2 6

Farm Drainage. By H. F. FRENCH. 100 illus. 284 pp. crown 8vo. (*New York, 1904*)... ... *net* 4 6

Talks on Manures. By J. HARRIS. New edition, 366 pp. crown 8vo. (*New York, 1893*) ... *net* 6 6

Coffee, its Culture and Commerce in all Countries. By C. G. W. LOCK. 11 plates, 274 pp. crown 8vo. (*1888*) 12 6

Sugar, a Handbook for Planters and Refiners. By the late J. A. R. NEWLANDS and B. E. R. NEWLANDS. 236 illus. 876 pp. demy 8vo. (*London, 1909*) ... ... *net* 1 5 0

Hops, their Cultivation, Commerce and Uses. By P. L. SIMMONDS. 143 pp. crown 8vo. (*1877*) ... 4 6

The Future of Cocoa-Planting. By H. HAMEL SMITH. With illustrations, 95 pp. crown 8vo, sewed. (*1908*) ... ... *net* 1 0

Estate Fences, their Choice, Construction and Cost. By A. VERNON. Re-issue, 150 illus. 420 pp. 8vo. (*1909*) ... ... *net* 8 6

ARCHITECTURE AND BUILDING.

The Hydropathic Establishment and its Baths. By R. O. ALLSOP. 8 plates, 107 pp. demy 8vo. (*1891*) 5 0

The Turkish Bath, its Design and Construction. By R. O. ALLSOP. 27 illus. 152 pp. demy 8vo. (*1890*) 6 0

Public Abattoirs, their Planning, Design and Equipment. By R. S. AYLING. 33 plates, 100 pp. demy 4to. (*1908*) ... ... *net* 8 6

The Builder's Clerk. By T. BALES. Second edition, 92 pp. fcap. 8vo. (*1904*) 1 6

Glossary of Technical Terms used in Architecture and the Building Trades. By G. J. BURNS. 136 pp. crown 8vo. (*1895*) 3 6

Chimney Design and Theory. By W. W. CHRISTIE. Second edition, 54 illus. 200 pp. crown 8vo. (*New York, 1902*) ... ... *net* 12 6

Approximate Estimates. By T. E. COLEMAN. Third edition, 481 pp. oblong 32mo, leather. (*1907*) ... ... *net* 5 0

Stable Sanitation and Construction. By T. E. COLEMAN. 183 illus. 226 pp. crown 8vo. (*1897*) 6 0

Architectural Examples in Brick, Stone, Wood and Iron. By W. FULLERTON. Third edition, 245 plates, 254 pp. demy 4to. (*1908*) ... *net* 15 0

Bricklaying System. By F. B. GILBRETH. Fully illustrated, 321 pp. 8vo. (*New York, 1909*) *net* 12 6

Field System. By F. B. GILBRETH. 194 pp. 12mo leather. (*New York, 1908*) ... ... *net* 12 6

The Building Trades Pocket Book. Compiled by R. HALL. 12mo. With interchangeable diary ... ... *net* 1 6
Ditto ditto, in leather ... ... *net* 2 6

The Clerk of Works' Vade Mecum. By G. G. HOSKINS. Seventh edition, 52 pp. fcap. 8vo. (*1901*) 1 6

A Handbook of Formulæ, Tables, and Memoranda, for Architectural Surveyors and others engaged in Building. By J. T. HURST. Fifteenth edition, 512 pp. royal 32mo, roan. (*1905*) *net* 5 0

Quantity Surveying, for the Use of Surveyors, Architects, Engineers and Builders. By J. LEANING. Fifth edition, 936 pp. demy 8vo. (*1904*) ... ... *net* 1 5 0

Obstruction to Light. A Graphic Method of determining Problems of Ancient Lights. By H. B. MOLESWORTH. 9 folding plates, 4to. (*1902*) *net* 6 0

Suburban Houses. A series of practical plans. By J. H. PEARSON. 46 plates and 12 pp. text, crown 4to. (*1905*) ... ... *net* 7 6

Solid Bitumens, their Physical and Chemical Properties and Chemical Analysis. By S. F. PECKHAM. 23 illus. 324 pp. 8vo. (*New York, 1909*) ... ... *net* 1 1 0

Roman Architecture, Sculpture and Ornament. By G. B. PIRANESI. 200 plates, reproduced in facsimile from the original. 2 vols. Imperial folio, in wrappers. (*1900*) ... ... *net* 2 2 0

The Seven Periods of English Architecture, defined and illustrated. By E. SHARPE. Third edition, 20 steel plates, royal 8vo. (*1888*) ... 12 6

Our Factories, Workshops and Warehouses, their Sanitary and Fire-Resisting Arrangements. By B. H. THWAITE. 183 illus. 282 pp. crown 8vo. (*1882*) 9 0

Elementary Principles of Carpentry. By T. TREDGOLD and J. T. HURST. Eleventh edition, 48 plates, 517 pp. crown 8vo. (*1904*) 12 6

Practical Stair Building and Handrailing. By W. H. WOOD. 32 plates, 91 pp. crown 4to. (*1894*) 10 6

Spons' Architects' and Builders' Pocket Price-Book, Memoranda, Tables and Prices. Edited by CLYDE YOUNG. Revised by STANFORD M. BROOKS. Illustrated, 552 pp. 16mo, leather cloth (size 6½ in. by 3¾ in. by ½ in. thick). Issued annually ... ... *net* 3 0

Heating Engineers' Quantities. By W. L. WHITE and G. M. WHITE. 4 plates, 33 pp. folio. (*1910*) *net* 10 6

ARTILLERY.

Guns and Gun Making Material. By G. EDE. Crown 8vo. (*1889*) 6 0

Treatise on Application of Wire to Construction of Ordnance. By J. A. LONGRIDGE. 180 pp. 8vo. (*1884*) 1 5 0

The Progress of Artillery: Naval Guns. By J. A. LONGRIDGE. 8vo, sewed. (*1896*)... ... ... 2 0

The Field Gun of the Future. By J. A. LONGRIDGE. 8vo, sewed. (*1892*) 2 6

BRIDGES, ARCHES, ROOFS, AND STRUCTURAL DESIGN.

Strains in Ironwork. By HENRY ADAMS. Fourth edition, 8 plates, 65 pp. crown 8vo. (*1904*) ... 5 0

The Practical Designing of Structural Ironwork. By HENRY ADAMS. 13 plates, 194 pp. 8vo. (*1894*) 8 6

Designing Ironwork. By HENRY ADAMS. Second series. 8vo, sewed.

Part I. A Steel Box Girder. (*1894*) *net*	0	9
„ II. Built-up Steel Stanchions. (*1901*) *net*	1	3
„ III. Cisterns and Tanks. (*1902*) *net*	1	0
„ IV. A Fireproof Floor. (*1903*) *net*	1	0

A Practical Treatise on Segmental and Elliptical Oblique or Skew Arches. By G. J. BELL. Second edition, 17 plates, 125 pp. royal 8vo. (*1906*) ... ... *net* 1 1 0

Economics of Construction in relation to Framed Structures. By R. H. BOW. Third thousand, 16 plates, 88 pp. 8vo. (*1873*) 5 0

Theory of Voussoir Arches. By Prof. W. CAIN. Third edition, 201 pp. 18mo, boards. (*New York, 1905*) ... ... *net* 2 0

New Formulæ for the Loads and Deflections of Solid Beams and Girders. By W. DONALDSON. Second edition, 8vo. (*1872*) 4 6

Plate Girder Railway Bridges. By M. FITZMAURICE. 4 plates, 104 pp. 8vo. (*1895*) 6 0

Pocket Book of Calculations in Stresses. By E. M. GEORGE. 66 illus. 140 pp. royal 32mo, half roan. (*1895*)... ... ... 3 6

Strains on Braced Iron Arches and Arched Iron Bridges. By A. S. HEAFORD. 39 pp. 8vo. (*1883*) 6 0

Tables for Roof Framing. By G. D. INSKIP. Second edition, 451 pp. 8vo, leather. (*New York, 1905*) ... ... *net* 12 6

Stresses in Girder and Roof Frames, for both dead and live loads, by simple Multiplication, etc. By F. R. JOHNSON. 28 plates, 215 pp. crown 8vo. (*1894*) 6 0

A Graphical Method for Swing Bridges. By B. F. LA RUE. 4 plates, 104 pp. 18mo, boards. (*New York, 1892*) ... ... *net* 2 0

Notes on Cylinder Bridge Piers and the Well System of Foundations. By J. NEWMAN. 144 pp. 8vo. (*1893*) 6 0

A New Method of Graphic Statics applied in the Construction of Wrought Iron Girders. By E. OLANDER. 16 plates, small folio. (*1887*) ... 10 6

Reference Book for Statical Calculations. By F. RUFF. With diagrams, 140 pp. crown 8vo. (*1906*) ... ... *net* 5 0

The Strength and Proportion of Riveted Joints. By B. B. STONEY. 87 pp. 8vo. (*1885*) 5 0

The Anatomy of Bridgework. By W. H. THORPE. 103 illus. 190 pp. crown 8vo. (*1906*) ... *net* 6 0

CEMENT AND CONCRETE.

Portland Cement: its Manufacture, Testing and Use. By D. B. BUTLER. Second edition, 97 illus. 396 pp. demy 8vo. (*1905*) ... ... *net* 16 0

Theory of Steel-Concrete Arches and of Vaulted Structures. By W. CAIN. Fourth edition, 27 illus. 212 pp. 18mo, boards. (*New York, 1906*) *net* 2 0

Cement Users' and Buyers' Guide. By CALCARE. 115 pp. 32mo, cloth. (*1901*) ... ... *net* 1 6

Diagrams for Designing Reinforced Concrete Structures. By G. F. DODGE. 31 illus. 104 pp. oblong folio. (*New York, 1910*) ... ... *net* 17 0

Cements, Mortars, and Concretes; their Physical properties. By M. S. FALK. 78 illus. 176 pp. 8vo. (*New York, 1904*) ... ... *net* 10 6

Concrete Construction, Methods and Cost. By H. P. GILLETTE and C. S. HILL. 310 illus. 690 pp. 8vo. (*New York, 1908*) ... ... *net* 1 1 0

Engineers' Pocket-Book of Reinforced Concrete. By E. L. HEIDENREICH. 164 illus. 364 pp. crown 8vo, leather, gilt edges. (*New York, 1909*) *net* 12 6

Concrete Inspection. By C. S. HILL. Illustrated, 179 pp. 12mo. (*New York, 1909*) ... ... *net* 4 6

Reinforced Concrete. By E. MCCULLOCH. 28 illus. 128 pp. crown 8vo. (*New York, 1908*) *net* 6 6

Concrete and Reinforced Concrete. By H. A. REID. 715 illus. 884 pp. royal 8vo. (*New York, 1907*) ... ... *net* 21 0

Theory and Design of Reinforced Concrete Arches. By A. REUTERDAHL. 41 illus. 126 pp. 8vo. (*New York, 1908*) ... ... *net* 8 6

Practical Cement Testing. By W. P. TAYLOR. With 142 illus. 329 pp. demy 8vo. (*New York, 1906*) ... ... *net* 12 6

Concrete Bridges and Culverts. By H. G. TYRRELL. 66 illus. 251 pp. crown 8vo, leather *net* 12 6

CIVIL ENGINEERING.

CANALS, SURVEYING.

(*See also* IRRIGATION *and* WATER SUPPLY.)

Practical Hints to Young Engineers Employed on Indian Railways. By A. W. C. ADDIS. With 14 illus. 154 pp. 12mo. (*1910*) ... *net*

Levelling, Barometric, Trigonometric and Spirit. By I. O. BAKER. Second edition, 15 illus. 145 pp. 18mo, boards. (*New York, 1903*) ... *net* 2 0

Notes on Instruments best suited for Engineering Field Work in India and the Colonies. By W. G. BLIGH. 65 illus. 218 pp. 8vo. (*1899*) ... 7 6

The Sextant and other Reflecting Mathematical Instruments. By F. R. BRAINARD. 33 illus. 120 pp. 18mo, boards. (*New York, 1891*)... *net* 2 0

Practical Designing of Retaining Walls. By Prof. W. CAIN. Fifth edition, 14 illus. 172 pp. 18mo, boards. (*New York, 1908*) ... ... *net* 2 0

The Maintenance of Macadamised Roads. By T. CODRINGTON. Second edition, 186 pp. 8vo. (*1892*) 7 6

Retaining Walls in Theory and Practice. By T. E. COLEMAN. 104 illus. 160 pp. crown 8vo. (*1909*) ... ... *net* 5 0

The Barometrical Determination of Heights. By F. J. B. CORDEIRO. Crown 8vo, limp leather. (*New York, 1898*) ... ... *net* 4 6

On Curved Masonry Dams. By W. B. COVENTRY. 8vo, sewed. (*1894*) 2 0

A Practical Method of Determining the Profile of a Masonry Dam. By W. B. COVENTRY. 8vo, sewed. (*1894*) 2 6

The Stresses on Masonry Dams (oblique sections). By W. B. COVENTRY. 8vo, sewed. (*1894*) ... 2 0

Tables for facilitating the Calculation of Earthworks. By D. CUNNINGHAM. 120 pp. royal 8vo 10 6

Handbook of Cost Data for Contractors and Engineers. By H. P. GILLETTE. 1854 pp. crown 8vo, leather, gilt edges. (*New York, 1910*) *net* 1 1 0

Rock Excavation, Methods and Cost. By H. P. GILLETTE. 56 illus. 376 pp. crown 8vo. (*New York, 1904*) ... ... *net* 12 6

High Masonry Dams. By E. S. GOULD. With illus. 88 pp. 18mo, boards. (*New York, 1897*) *net* 2 0

Grace's Tables for Curves, with hints to young engineers. 8 figures, 43 pp. oblong 8vo. (*1908*) *net* 5 0

Grace's Earthwork Tables. 36 double-page tables, 4to. (*1907*) ... ... *net* 12 6

Railway Tunnelling in Heavy Ground. By C. GRIPPER. 3 plates, 66 pp. royal 8vo. (*1879*) ... 7 6

Levelling and its General Application. By T. HOLLOWAY. Second edition, 53 illus. 147 pp. 8vo. (*1895*)... ... ... 5 0

Waterways and Water Transport in different Countries. By J. S. JEANS. 55 illus. 520 pp. 8vo. (*1890*) ... ... *net* 9 0

Table of Barometrical Heights to 20,000 Feet. By W. H. MACKESY, with some practical suggestions by Sir Guildford Molesworth. 1 plate, 24 pp. royal 32mo. (*1882*) 3 0

Aid Book to Engineering Enterprise. By E. MATHESON. Third edition, illustrated, 916 pp. medium 8vo, buckram. (*1898*) 1 4 0

A Treatise on Surveying. By R E. MIDDLETON and O. CHADWICK. Second edition, royal 8vo.

Part I. 11 plates, 296 pp. (*1904*) ... 10 6
,, II. Fully illustrated, 334 pp. (*1906*) 10 6

A Pocket Book of Useful Formulæ and Memoranda, for Civil and Mechanical Engineers. By Sir G. L. MOLESWORTH and H. B. MOLESWORTH. With an Electrical Supplement by W. H. MOLESWORTH. Twenty-sixth edition, 760 illus. 901 pp. royal 32mo, French morocco, gilt edges. (*1908*) *net* 5 0

The Pocket Books of Sir G. L. Molesworth and J. T. Hurst, printed on India paper and bound in one vol. Royal 32mo, russia, gilt edges ... *net* 10 6

Metallic Structures: Corrosion and Fouling and their Prevention. By J. NEWMAN. Illustrated, 385 pp. crown 8vo. (*1896*)... ... ... 9 0

Scamping Tricks and Odd Knowledge occasionally practised upon Public Works. By J. NEWMAN. New impression, 129 pp. crown 8vo. (*1908*) *net* 2 0

Earthwork Slips and Subsidences on Public Works. By J. NEWMAN. 240 pp. crown 8vo. (*1890*) 7 6

Co-ordinate Geometry as applied to Land Surveying. By W. PILKINGTON. 5 illus. 44 pp. 12mo. (*1909*) ... ... *net* 1 6

Diagrams for the Graphic Calculation of Earthwork Quantities. By A. H. ROBERTS. Ten cards, fcap. in cloth case ... ... *net* 10 6

Pioneering. By F. SHELFORD, illustrated. 88 pp. crown 8vo. (*1909*) ... ... *net* 3 0

Topographical Surveying. By G. J. SPECHT. Second edition, 2 plates and 28 illus. 210 pp. 18mo, boards. (*New York, 1898*) ... ... *net* 2 0

Spons' Dictionary of Engineering, Civil, Mechanical, Military and Naval. 10,000 illus. 4300 pp. super royal 8vo. (*1874, Supplement issued in 1881*).

Complete with Supplement, in 11 divisions *net* 3 10 0
Ditto ditto in 4 vols. ... ... *net* 3 3 0

Surveying and Levelling Instruments. By W. F. STANLEY. Third edition, 372 illus. 562 pp. crown 8vo. (*1901*) 7 6

Surveyor's Handbook. By T. U. TAYLOR. 116 illus. 310 pp. crown 8vo, leather, gilt edges. (*New York, 1908*) ... ... *net* 8 6

Logarithmic Land Measurement. By J. WALLACE. 32 pp. royal 8vo. (*1910*) ... ... *net* 5 0

Hints on Levelling Operations. By W. H. WELLS. Second edition, 8vo, sewed. (*1890*) ... 1 0

The Drainage of Fens and Low Lands by Gravitation and Steam Power. By W. H. WHEELER. 8 plates, 175 pp. 8vo. (*1888*) ... 12 6

Stadia Surveying, the theory of Stadia Measurements. By A. WINSLOW. Fifth edition, 148 pp. 18mo, boards. (*New York, 1902*) ... ... *net* 2 0

Handbook on Tacheometrical Surveying. By C. XYDIS. 55 illus. 3 plates, 63 pp. 8vo. (*1909*) *net* 6 0

DICTIONARIES.

Technological Dictionary in the English, Spanish, German and French Languages. By D. CARLOS HUELIN Y ARSSU. Crown 8vo.

Vol. I. ENGLISH-SPANISH-GERMAN-FRENCH. 609 pp. (*1906*) ... ... *net* 10 6

Vol. II. GERMAN-ENGLISH-FRENCH-SPANISH. 720 pp. (*1908*) ... ... *net* 10 6

Vol. III. FRENCH-GERMAN-SPANISH-ENGLISH. *In preparation.*

Vol. IV. SPANISH-FRENCH-ENGLISH-GERMAN. 750 pp. (*1910*) ... ... *net* 10 6

English-French and French-English Dictionary of the Motor-Car, Cycle and Boat. By F. LUCAS. 171 pp. crown 8vo. (*1905*) ... *net* 5 0

Spanish-English Dictionary of Mining Terms. By F. LUCAS. 78 pp. 8vo. (*1905*) ... *net* 5 0

English-Russian and Russian-English Engineering Dictionary. By L. MEYCLIAR. 100 pp. 16mo. (*1909*) ... ... *net* 2 6

Reed's Polyglot Guide to the Marine Engine, in English, French, German and Norsk. Second edition, oblong 8vo. (*1900*). ... ... *net* 6 0

DOMESTIC ECONOMY.

Food Adulteration and its Detection. By J. P. BATTERSHALL. 12 plates, 328 pp. demy 8vo. (*New York, 1887*) 15 0

How to Check Electricity Bills. By S. W. BORDEN. 41 illus. 54 pp. crown 8vo. (*New York, 1907*) ... ... *net* 2 0

Practical Hints on Taking a House. By H. P. BOULNOIS. 71 pp. 18mo. (*1885*) 1 6

The Cooking Range, its Failings and Remedies. By F. DYE. 52 pp. fcap. 8vo, sewed. (*1888*) ... 0 6

The Kitchen Boiler and Water Pipes. By H. GRIMSHAW. 8vo, sewed. (*1887*) ... ... *net* 1 0

Cookery and Domestic Management, including economic and middle class Practical Cookery. By K. MELLISH. 56 coloured plates and 441 illus. 987 pp. super-royal 8vo. (*1901*) ... *net* 16 0

Spons' Household Manual. 250 illus. 1043 pp. demy 8vo. (*1902*) 7 6

Ditto ditto half-bound French morocco 9 0

Handbook of Sanitary Information for Householders. By R. S. TRACY. 33 illus. 114 pp. 18mo. (*New York, 1900*) 2 6

DRAWING.

The Ornamental Penman's, Engraver's and Sign Writer's Pocket Book of Alphabets. By B. ALEXANDER. Oblong 12mo, sewed 0 6

The Draughtsman's Handbook of Plan and Map Drawing. By G. G. ANDRE. 87 illus. and 34 plain and coloured plates, 162 pp. crown 4to. (*1891*) 9 0

Slide Valve Diagrams: a French Method for their Construction. By L. BANKSON. 18mo, boards. (*New York, 1892*) ... ... *net* 2 0

A System of Easy Lettering. By J. H. CROMWELL. With Supplement by G. MARTIN. Sixth thousand, oblong 8vo. (*New York, 1900*) ... *net* 2 0

Plane Geometrical Drawing. By R. C. FAWDRY. Illustrated, 185 pp. crown 8vo. (*1901*) ... *net* 3 0

Twelve Plates on Projection Drawing. By O. GUETH. Oblong 4to. (*New York, 1903*) ... *net* 3 0

Hints on Architectural Draughtsmanship. By G. W. T. HALLATT. Fourth edition, 80 pp. 18mo. (*1906*) ... ... *net* 1 6

A First Course of Mechanical Drawing (Tracing). By G. HALLIDAY. Oblong 4to, sewed 2 0

Drawings for Medium-sized Repetition Work. By R. D. SPINNEY. With 47 illus. 130 pp. 8vo. (*1909*) ... ... *net* 3 6

Mathematical Drawing Instruments. By W. F. STANLEY. Seventh edition, 265 illus. 370 pp. crown 8vo. (*1900*) 5 0

ELECTRICAL ENGINEERING.

Practical Electric Bell Fitting. By F. C. ALLSOP. Tenth edition, 186 illus. including 8 folding plates, 185 pp. crown 8vo. (*1903*) 3 6

Telephones: their Construction and Fitting. By F. C. ALLSOP. Eighth edition, 184 illus. 222 pp. crown 8vo. (*1909*) 3 6

Thermo-electric Reactions and Currents between Metals in Fused Salts. By T. ANDREWS. 8vo, sewed. (*1896*) 1 0

Auto-Transformer Design. By A. H. AVERY. 25 illus. 60 pp. 8vo. (*1909*) ... ... *net* 3 6

Principles of Electric Power (Continuous Current) for Mechanical Engineers. By A. H. BATE. 63 illus. 204 pp. crown 8vo. (*1905*) (FINSBURY TECHNICAL MANUAL) ... ... *net* 4 6

Practical Construction of Electric Tramways. By WILLIAM R. BOWKER. 93 illus. 119 pp. 8vo. (*1903*) ... ... *net* 6 0

Design and Construction of Induction Coils. By A. F. COLLINS. 155 illus. 272 pp. demy 8vo. (*New York, 1909*) ... ... *net* 12 6

Switchboard Measuring Instruments for Continuous and Polyphase Currents. By J. C. CONNAN. 117 illus. 150 pp. 8vo, cloth. (*1908*) *net* 5 0

Electric Cables, their Construction and Cost. By D. COYLE and F. J. O. HOWE. With many diagrams and 216 tables, 467 pp. crown 8vo, leather. (*1909*) ... ... *net* 15 0

Management of Electrical Machinery. By F. B. CROCKER and S. S. WHEELER. Eighth edition, 131 illus. 223 pp. crown 8vo. (*New York, 1909*) *net* 4 6

Electric Lighting: A Practical Exposition of the Art. By F. B. CROCKER. Royal 8vo. (*New York.*)

Vol. I. **The Generating Plant.** Sixth edition, 213 illus. 470 pp. (*1904*) *net* 12 6

Vol. II. **Distributing Systems and Lamps.** Second edition, 391 illus. 505 pp. (*1905*) ... ... *net* 12 6

The Care and Management of Ignition Accumulators. By H. H. U. CROSS. 12 illus. 74 pp. crown 8vo, limp. (S. & C. SERIES, No. 19.) (*1910*) ... ... *net* 1 6

Elementary Telegraphy and Telephony. By ARTHUR CROTCH. 238 illus. 223 pp. 8vo. (*1903.*) (FINSBURY TECHNICAL MANUAL) ... ... *net* 4 6

Electricity and Magnetism in Telephone Maintenance. By G. W. CUMMINGS. 45 illus. 137 pp. 8vo. (*New York, 1908*) ... ... *net* 6 6

Grouping of Electric Cells. By W. F. DUNTON. 4 illus. 50 pp. fcap. 8vo. (*1906*) ... ... *net* 1 6

Magnets and Electric Currents. By Prof. J. A. FLEMING. Second edition, 136 illus. 417 pp. crown 8vo (*1902*) ... ... *net* 5 0

Notes on Design of Small Dynamo. By GEORGE HALLIDAY. Second edition, 8 plates, 8vo. (*1895*) 2 6

Practical Alternating Currents and Power Tranmission. By N. HARRISON. 172 illus. 375 pp. crown 8vo. (*New York, 1906*) ... *net* 10 6

Making Wireless Outfits. By N. HARRISON. 27 illus. 61 pp. crown 8vo, limp. (S. & C. SERIES, No. 11.) (*New York, 1909*) ... ... *net* 1 6

Wireless Telephone Construction. By N. HARRISON. 43 illus. 73 pp. crown 8vo, limp. (S. & C. SERIES, No. 12.) (*New York, 1909*) ... *net* 1 6

The Phœnix Fire Office Rules for Electric Light and Electrical Power Installations. By M. HEAPHY. Thirty-seventh edition, 8vo, sewed. (*1908*) 0 6

Testing Telegraph Cables. By Colonel V. HOSKIŒR. Third edition, crown 8vo. (*1889*) ... 4 6

Long Distance Electric Power Transmission. By R. W. HUTCHINSON. 136 illus. 345 pp. crown 8vo. (*New York, 1907*) ... ... *net* 12 6

Theory and Practice of Electric Wiring. By W. S. IBBETSON. 119 illus. 366 pp. crown 8vo. (*1909*) ... ... *net* 5 0

Practical Electrical Engineering for Elementary Students. By W. S. IBBETSON. With 61 illus. 155 pp. crown 8vo. (*1910*) ... ... *net* 3 0

General Rules recommended for Wiring for the Supply of Electrical Energy. Issued by THE INSTITUTION OF ELECTRICAL ENGINEERS. 8vo, sewed. (*Revised, April 1907*) ... ... *net* 0 6

Form of Model General Conditions recommended by THE INSTITUTION OF ELECTRICAL ENGINEERS for use in connection with Electrical Contracts. 8vo, sewed. (*1906*) ... ... *net* 1 0

A Handbook of Electrical Testing. By H. R. KEMPE. Seventh edition, 285 illus. 706 pp. demy 8vo. (*1908*) ... ... *net* 18 0

Application of Electricity to Railway Working. By W. E. LANGDON. 142 illus. and 5 plates, 347 pp. 8vo. (*1897*)... ... ... 10 6

How to Become a Competent Motorman. By V. B. LIVERMORE and J. WILLIAMS. 45 illus. 252 pp. 12mo. (*New York, 1903*) ... ... *net* 4 6

Electromagnets, their design and construction. By A. N. MANSFIELD. 36 illus. 155 pp. 18mo, boards. (*New York, 1901*) ... ... *net* 2 0

Telephone Construction, Methods and Cost. By C. MAYER. With Appendices on the cost of materials and labour by J. C. SLIPPY. 103 illus. 284 pp. crown 8vo. (*New York, 1908*) ... *net* 12 6

Induction Coils. By N. H. SCHNEIDER. Second edition, 79 illus. 285 pp. crown 8vo. (*New York, 1901*) ... ... *net* 4 6

Electric Gas Lighting. By N. H. SCHNEIDER. 57 illus. 101 pp. 12mo. (S. & C. SERIES, No. 8.) (*New York, 1901*) ... ... *net* 2 0

How to Install Electric Bells, Annunciators and Alarms. By N. H. SCHNEIDER. 59 illus. 63 pp. crown 8vo, limp. (S. & C. SERIES, No. 2.) (*New York, 1905*) ... ... *net* 1 6

Modern Primary Batteries, their construction, use and maintenance. By N. H. SCHNEIDER. 54 illus. 94 pp. crown 8vo, limp. (S. & C. SERIES, No. 1.) (*New York, 1905*) ... ... *net* 1 6

Practical Engineers' Handbook on the Care and Management of Electric Power Plants. By N. H. SCHNEIDER. 203 illus. 274 pp. crown 8vo. (*New York, 1906*) ... ... *net* 5 0

Electrical Circuits and Diagrams, illustrated and explained. By N. H. SCHNEIDER. 8vo, limp. (S. & C. SERIES, Nos. 3 and 4.) (*New York*)

Part 1. 217 illus. 72 pp. (*1905*) ... *net* 1 6
Part 2. 73 pp. (*1909*) ... ... *net* 1 6

Electrical Instruments and Testing. By N. H. SCHNEIDER. Third edition. 133 illus. 239 pp. crown 8vo. (*New York, 1907*) ... ... *net* 4 6

Experimenting with Induction Coils. By N. H. SCHNEIDER. 26 illus. 73 pp. crown 8vo, limp. (S. & C. SERIES, No. 5.) (*New York, 1906*) *net* 1 6

Study of Electricity for Beginners. By N. H. SCHNEIDER. 54 illus. 88 pp. crown 8vo, limp. (S. & C. SERIES, No. 6.) (*New York, 1905*) *net* 1 6

Practical Electrics: a Universal Handybook on Every Day Electrical Matters. Seventh edition, 126 illus. 135 pp. 8vo. (S. & C. SERIES, No. 13.) (*New York, 1902*) ... ... *net* 1 6

The Voltaic Accumulator: an elementary treatise. By E. REYNIER. Translated from the French by J. A. BERLY. 62 illus. 202 pp. 8vo 9 0

Dry Batteries: how to Make and Use them. By a DRY BATTERY EXPERT. With additional notes by N. H. SCHNEIDER. 30 illus. 59 pp. crown 8vo, sewed. (S. & C. SERIES, No. 7.) (*New York, 1905*) ... ... *net* 1 6

The Diseases of Electrical Machinery. By E. SCHULZ. Edited, with a Preface, by Prof. S. P. THOMPSON. 42 illus. 84 pp. crown 8vo *net* 2 0

Electric Toy-Making. By T. O. SLOANE. Fifteenth edition, 70 illus. 183 pp. crown 8vo. (*New York, 1903*) ... ... *net* 4 6

Electricity Simplified. By T. O. SLOANE. Tenth edition, 29 illus. 158 pp. crown 8vo. (*New York, 1901*) ... ... *net* 4 6

How to become a Successful Electrician. By T. O. SLOANE. Third edition, illustrated, crown 8vo. (*New York, 1899*) ... ... *net* 4 6

Electricity: its Theory, Sources and Applications. By J. T. SPRAGUE. Third edition, 109 illus. 658 pp. crown 8vo. (*1892*) ... ... *net* 7 6

Telegraphic Connections. By C. THOM and W. H. JONES. 20 plates, 59 pp. oblong 8vo. (*New York, 1892*) ... ... *net* 3 6

Röntgen Rays and Phenomena of the Anode and Cathode. By E. P. THOMPSON and W. A. ANTHONY. 105 illus. 204 pp. 8vo. (*New York, 1896*) ... ... *net* 4 6

Dynamo Electric Machinery. By Prof. S. P. THOMPSON. Seventh edition, demy 8vo. (FINSBURY TECHNICAL MANUAL.)

Vol. I. **Continuous-Current Machinery.** With 4 coloured and 30 folding plates, 573 illus. 984 pp. (*1904*) *net* 1 10 0

Vol. II. **Alternating Current Machinery.** 15 coloured and 24 folding plates, 546 illus. 900 pp. (*1905*) *net* 1 10 0

Design of Dynamos (Continuous Currents). By Prof. S. P. THOMPSON. 4 coloured and 8 folding plates, 243 pp. demy 8vo. (*1903*) ... ... *net* 12 0

Schedule for Dynamo Design, issued with the above. 6*d.* each, 4*s.* per doz., or 18*s.* per 100 *net*

Curves of Magnetic Data for Various Materials. A reprint on transparent paper for office use of Plate L from Dynamo Electric Machinery, and measuring 25 in. by 16 in. ... ... *net* 0 7

The Electromagnet. By C. R. UNDERHILL. 67 illus. 159 pp. crown 8vo. (*New York, 1903*) *net* 6 6

Practical Guide to the Testing of Insulated Wires and Cables. By H. L. WEBB. Fifth edition, 38 illus. 118 pp. crown 8vo. (*New York, 1902*) ... ... *net* 4 6

FOREIGN EXCHANGE.

English Prices with Russian Equivalents (at Fourteen Rates of Exchange). English prices per lb., with equivalents in roubles and kopecks per pood. By A. ADIASSEWICH. 182 pp. fcap. 32mo, roan. (*1908*)... ... ... *net* 1 0

English Prices with German Equivalents (at Seven Rates of Exchange). English prices per lb., with equivalents in marks per kilogramme. By St. KOCZOROWSKI. 95 pp. fcap. 32mo, roan. (*1909*) ... ... *net* 1 0

English Prices with Spanish Equivalents. At Seven Rates of Exchange. English prices per lb., with equivalents in pesetas per kilogramme. By S. LAMBERT. 95 pp. 32mo, roan. (*1910*) *net* 1 0

English Prices with French Equivalents (at Seven Rates of Exchange). English prices per lb. to francs per kilogramme. By H. P. McCARTNEY. 97 pp. 32mo, roan. (*1907*) *net* 1 0

Principles of Foreign Exchange. By E. MATHESON. Fourth edition, 54 pp. 8vo, sewed. (*1905*) *net* 0 3

GAS AND OIL ENGINES.

The Theory of the Gas Engine. By D. CLERK. Edited by F. E. IDELL. Third edition, 19 illus. 180 pp. 18mo, boards. (*New York, 1903*) ... *net* 2 0

The Design and Construction of Oil Engines. By A. H. GOLDINGHAM. Third edition, 112 illus. 260 pp. crown 8vo. (*New York, 1910*) *net* 10 6

Gas Engine in Principle and Practice. By A. H. GOLDINGHAM. 107 illus. 195 pp. 8vo, cloth. (*New York, 1907*) ... ... *net* 6 6

Practical Hand-Book on the Care and Management of Gas Engines. By G. LIECKFELD. Third edition, square 16mo. (*New York, 1896*) ... 3 6

Elements of Gas Engine Design. By S. A. MOSS. 197 pp. 18mo, boards. (*New York, 1907*)... *net* 2 0

Gas and Petroleum Engines. A Manual for Students and Engineers. (FINSBURY TECHNICAL MANUAL.) By Prof. W. ROBINSON. *Third edition in preparation*

GAS LIGHTING.

Gas Analyst's Manual (incorporating Hartley's "Gas Analyst's Manual" and "Gas Measurement"). By J. ABADY. 102 illustrations, 576 pp. demy 8vo. (*1902*) ... ... *net* 18 0

Gas Works: their Arrangement, Construction, Plant and Machinery. By F. COLYER. 31 folding plates, 134 pp. 8vo. (*1884*) ... ... *net* 8 6

Transactions of the Institution of Gas Engineers. Edited by WALTER T. DUNN, *Secretary.* Published annually. 8vo ... ... *net* 10 6

Lighting by Acetylene. By F. DYE. 75 illus. 200 pp. crown 8vo. (*1902*) ... ... *net* 6 0

A Comparison of the English and French Methods of Ascertaining the Illuminating Power of Coal Gas. By A. J. VAN EIJNDHOVEN. Illustrated, crown 8vo. (*1897*) 4 0

Gas Lighting and Gas Fitting. By W. P. GERHARD. Second edition, 190 pp. 18mo, boards. (*New York, 1894*) ... ... *net* 2 0

A Treatise on the Comparative Commercial Values of Gas Coals and Cannels. By D. A. GRAHAM. 3 plates, 100 pp. 8vo. (*1882*) ... 4 6

The Gas Engineer's Laboratory Handbook. By J. HORNBY. Third edition, revised, 70 illus. 330 pp. crown 8vo. (*1910*) ... ... *net* 6 0

HISTORICAL AND BIOGRAPHICAL.

Extracts from the Private Letters of the late Sir William Fothergill Cooke, 1836–9, relating to the Invention and Development of the Electric Telegraph; also a Memoir by LATIMER CLARK. Edited by F. H. WEBB. Sec. Inst.E.E. 8vo. (*1895*) 3 0

A Chronology of Inland Navigation in Great Britain. By H. R. DE SALIS. Crown 8vo. (*1897*). 4 6

A History of Electric Telegraphy to the year 1837. By J. J. FAHIE. 35 illus. 542 pp. crown 8vo. (*1889*) 2 0

History and Development of Steam Locomotion on Common Roads. By W. FLETCHER. 109 illus. 288 pp. 8vo 5 0

Life as an Engineer: its Lights, Shades, and Prospects. By J. W. C. HALDANE. 23 plates, 338 pp. crown 8vo. (*1905*) ... ... *net* 5 0

Philipp Reis, Inventor of the Telephone: a Biographical Sketch. By Prof. S. P. THOMPSON. 8vo, cloth. (*1883*) 7 6

The Development of the Mercurial Air Pump. By Prof. S. P. THOMPSON. Illustrated, royal 8vo, sewed. (*1888*) 1 6

HOROLOGY.

Watch and Clock Maker's Handbook, Dictionary and Guide. By F. J. BRITTEN. Tenth edition, 450 illus. 492 pp. crown 8vo. (*1902*) *net* 5 0

The Springing and Adjusting of Watches. By F. J. BRITTEN. 75 illus. 152 pp. crown 8vo. (*1898*) ... ... *net* 3 0

Prize Essay on the Balance Spring and its Isochronal Adjustments. By M. IMMISCH. 7 illus. 50 pp. crown 8vo. (*1872*) 2

HYDRAULICS AND HYDRAULIC MACHINERY.

(*See also* WATER SUPPLY.)

Pumps: Historically, Theoretically and Practically Considered. By P. R. BJÖRLING. Second edition, 156 illus. 234 pp. crown 8vo. (*1895*) 7 6

Pump Details. By P. R. BJÖRLING. 278 illus. 211 pp. crown 8vo. (*1892*) 7 6

Pumps and Pump Motors: A Manual for the use of Hydraulic Engineers. By P. R. BJÖRLING. Two vols. 261 plates, 369 pp. royal 4to. (*1895*) *net* 1 10 0

Practical Handbook on Pump Construction. By P. R. BJÖRLING. Second edition, 9 plates, 90 pp. crown 8vo. (*1904*) 5 0

Water or Hydraulic Motors. By P. R. BJÖRLING. 206 illus. 287 pp. crown 8vo. (*1903*) 9 0

Hydraulic Machinery, with an Introduction to Hydraulics. By R. G. BLAINE. Second edition with 307 illus. 468 pp. 8vo. (FINSBURY TECHNICAL MANUAL). (*1905*) ... ... *net* 14 0

Practical Hydraulics. By T. Box. Fifteenth edition, 8 plates, 88 pp. crown 8vo. (*1909*) *net* 5 0

Hydraulic, Steam, and Hand Power Lifting and Pressing Machinery. By F. COLYER. Second edition, 88 plates, 211 pp. imperial 8vo. (*1892*) *net* 10 6

Pumps and Pumping Machinery. By F. COLYER.
Vol. I. Second edition, 53 plates, 212 pp. 8vo (*1892*) ... ... *net* 10 6
Vol. II. Second edition, 48 plates, 169 pp. 8vo. (*1900*) ... ... *net* 10 6

Construction of Horizontal and Vertical Water-wheels. By W. CULLEN. Second edition, small 4to. (*1871*) 5 0

Donaldson's Poncelet Turbine and Water Pressure Engine and Pump. By W. DONALDSON. 4to. (*1883*) 5 0

Principles of Construction and Efficiency of Waterwheels. By W. DONALDSON. 13 illus. 94 pp. 8vo. (*1876*) 5 0

Practical Hydrostatics and Hydrostatic Formulæ. By E. S. GOULD. 27 illus. 114 pp. 18mo, boards. (*New York, 1903*) ... ... *net* 2 0

Hydraulic and other Tables for purposes of Sewerage and Water Supply. By T. HENNELL. Third edition, 70 pp. crown 8vo. (*1908*) *net* 4 6

Hydraulic Tables for finding the Mean Velocity and Discharge in Open Channels. By T. HIGHAM. Second edition, 90 pp. super-royal 8vo. (*1898*)... 7 6

Tables for Calculating the Discharge of Water in Pipes for Water and Power Supplies. Indexed at side for ready reference. By A. E. SILK. 63 pp. crown 8vo. (*1899*) 5 0

Simple Hydraulic Formulæ. By T. W. STONE. 9 plates, 98 pp. crown 8vo. (*1881*) 4 0

INDUSTRIAL CHEMISTRY AND MANUFACTURES.

Perfumes and their Preparation. By G. W. ASKINSON. Translated from the Third German Edition by I. FUEST. Third edition, 32 illus. 312 pp. 8vo. (*New York, 1907*) ... ... *net* 12 6

Brewing Calculations, Gauging and Tabulation. By C. H. BATER. 340 pp. 64mo, roan, gilt edges. (*1897*) ... ... *net* 1 6

A Pocket Book for Chemists, Chemical Manufacturers, Metallurgists, Dyers, Distillers, etc. By T. BAYLEY. Seventh edition, 550 pp. royal 32mo, roan, gilt edges. (*1905*) ... ... *net* 5 0

Practical Receipts for the Manufacturer, the Mechanic, and for Home use. By Dr. H. R. BERKELEY and W. M. WALKER. 250 pp. demy 8vo. (*1902*) ... ... *net* 7 6

A Treatise on the Manufacture of Soap and Candles, Lubricants and Glycerine. By W. L. CARPENTER and H. LEASK. Second edition, 104 illus. 456 pp. crown 8vo. (*1895*) 12 6

A Text Book of Paper Making. By C. F. CROSS and E. J. BEVAN. Third edition, 97 illus. 411 pp. crown 8vo. (*1907*) ... ... *net* 12 6

C.B.S. Standard Units and Standard Paper Tests. By C. F. CROSS, E. J. BEVAN, C. BEADLE and R. W. SINDALL. 25 pp. crown 4to. (*1903*) *net* 2 6

Soda Fountain Requisites. A Practical Receipt Book for Druggists, Chemists, etc. By G. H. DUBELLE. Third edition, 157 pp. crown 8vo. (*New York, 1905*) ... ... *net* 4 6

The Chemistry of Fire and Fire Prevention. By H. and H. INGLE. 45 illus. 290 pp. crown 8vo. (*1900*) 9 0

Ice-Making Machines. By M. LEDOUX and others. Sixth edition. 190 pp. 18mo, boards. (*New York*, 1906) ... ... *net* 2 0

Brewing with Raw Grain. By T. W. LOVIBOND. 75 pp. crown 8vo. (*1883*) 5 0

Sugar, a Handbook for Planters and Refiners. By the late J. A. R. NEWLANDS and B. E. R. NEWLANDS. 236 illus. 876 pp. demy 8vo. (*London, 1909*) ... ... *net* 1 5 0

Principles of Leather Manufacture. By Prof. H. R. PROCTER. 101 illus. 520 pp. medium 8vo. (*1908*) ... ... *net* 18 0

Leather Industries Laboratory Handbook of Analytical and Experimental methods. By H. R. PROCTER. Second edition, 4 plates, 46 illus. 450 pp. demy 8vo. (*1908*) ... ... *net* 18 0

Theoretical and Practical Ammonia Refrigeration. By I. I. REDWOOD. Sixth thousand, 15 illus. 146 pp. square 16mo. (*New York, 1909*) *net* 4 6

Breweries and Maltings. By G. SCAMMELL and F. COLYER. Second edition, 20 plates, 178 pp. 8vo. (*1880*) ... ... *net* 6 0

Factory Glazes for Ceramic Engineers. By H. RUM-BELLOW. Folio. Series A, Leadless Sanitary Glazes. (*1908*) ... ... *net* 2 2 0

Text Book of Physical Chemistry. By C. L. SPEYERS. 224 pp. demy 8vo. (*New York, 1898*) 9 0

Spons' Encyclopædia of the Industrial Arts, Manufactures and Commercial Products. 1500 illus. 2100 pp. super-royal 8vo. (*1882*)
In 2 Vols. cloth ... ... *net* 2 2 0

Pigments, Paints and Painting. By G. TERRY. 49 illus. 392 pp. crown 8vo. (*1893*) 7 6

Tables for the Quantitative Estimation of the Sugars. By E. WEIN and W. FREW. Crown 8vo. (*1896*) 6 0

Workshop Receipts. For the use of Manufacturers, Mechanics and Scientific Amateurs. New and thoroughly revised edition, crown 8vo. (*1909*) ... ... *each net* 3 0

Vol. I. ACETYLENE LIGHTING *to* DRYING. 223 illus. 532 pp.
Vol. II. DYEING *to* JAPANNING. 259 illus. 540 pp.
Vol. III. JOINTING PIPES *to* PUMPS. 256 illus. 528 pp.
Vol. IV. RAINWATER SEPARATORS *to* WINES. 250 illus. 520 pp.

Practical Handbook on the Distillation of Alcohol from Farm Products. By F. B. WRIGHT. Second edition, 60 illus. 271 pp. crown 8vo. (*New York, 1907*) ... ... *net* 4 6

The Manufacture of Chocolate and other Cacao Preparations. By P. ZIPPERER. Second edition, 87 illus. 280 pp. royal 8vo. (*1902*) ... *net* 16 0

IRRIGATION.

The Irrigation Works of India. By R. B. BUCKLEY. Second edition, with coloured maps and plans. 336 pp. 4to, cloth. (*1905*) ... *net* 2 2 0

Facts, Figures, and Formulæ for Irrigation Engineers. By R. B. BUCKLEY. With illus. 239 pp. large 8vo. (*1908*) ... ... *net* 10 6

Irrigated India. By Hon. ALFRED DEAKIN. With Map, 322 pp. 8vo. (*1893*) 8 6

Indian Storage Reservoirs, with Earthen Dams. By W. L. STRANGE. 14 plates and 53 illus. 379 pp. demy 8vo. (*1904*) ... ... *net* 1 1 0

Irrigation Farming. By L. M. WILCOX. Revised edition, 113 illus. 494 pp. crown 8vo. (*New York*) ... ... *net* 8 6

Egyptian Irrigation. By Sir W. WILLCOCKS. Second edition out of Print.

A few copies of the First Edition (*1889*) *are still to be had. Price* 15*s. net.*

The Nile Reservoir Dam at Assuan, and After. By Sir W. WILLCOCKS. Second edition, 13 plates, super-royal 8vo. (*1903*) ... ... *net* 6 0

The Assuân Reservoir and Lake Moeris. By Sir W. WILLCOCKS. With text in English, French and Arabic. 5 plates, 116 pp. super-royal 8vo. (*1904*) ... ... *net* 5 0

The Nile in 1904. By Sir W. WILLCOCKS. 30 plates, 200 pp. super-royal 8vo. (*1904*) *net* 9 0

LOGARITHM TABLES.

Aldum's Pocket Folding Mathematical Tables. Four-figure logarithms, and Anti-logarithms, Natural Sines, Tangents, Cotangents, Cosines, Chords and Radians for all angles from 1 to 90 degrees. On folding card. *Net* 4*d.* 20 copies, *net* 6*s.*

Tables of Seven-figure Logarithms of the Natural Numbers from 1 to 108,000. By C. BABBAGE. Stereotype edition, 8vo 7 6

Short Logarithmic and other Tables. By W. C. UNWIN. Fourth edition, small 4to 3 0

Logarithmic Land Measurement. By J. WALLACE. 32 pp. royal 8vo. (*1910*) ... ... *net* 5 0

A. B. C. Five-figure Logarithms with Tables, for Chemists. By C. J. WOODWARD. Crown 8vo ... ... *net* 2 6

A. B. C. Five-figure Logarithms for general use, with lateral index for ready reference. By C. J. WOODWARD. Second edition, with cut lateral Index, 116 pp. 12mo, limp leather ... *net* 3 0

MARINE ENGINEERING AND NAVAL ARCHITECTURE.

Marine Propellers. By S. W. BARNABY. Fifth edition, 5 plates, 56 illus. 185 pp. demy 8vo. (*1908*) ... ... *net* 10 6

Marine Engineer's Record Book: Engines. By B. C. BARTLEY. 8vo, roan ... ... *net* 5 0

The Engineer's and Draughtsman's Data Book for Workshop and Office Use. Third edition, crown 8vo, roan 3 0

Yachting Hints, Tables and Memoranda. By A. C. FRANKLIN. Waistcoat pocket size, 103 pp. 64mo, roan, gilt edges ... ... *net* 1 0

Steamship Coefficients, Speeds and Powers. By C. F. A. FYFE. 31 plates, 280 pp. fcap. 8vo, leather. (*1907*) ... ... *net* 10 6

Steamships and Their Machinery, from first to last. By J. W. C. HALDANE. 120 illus. 532 pp. 8vo. (*1893*) 15 0

Tables for Constructing Ships' Lines. By A. HOGG. Second edition, 8vo 7 0

Submarine Boats. By G. W. HOVGAARD. 2 plates, 98 pp. crown 8vo. (*1887*) 5 0

Tabulated Weights of Angle, Tee, Bulb, Round, Square, and Flat Iron and Steel for the use of Naval Architects, Ship-builders, etc. By C. H. JORDAN. Sixth edition, 640 pp. royal 32mo, French morocco, gilt edges. (*1909*) ... *net* 7 6

Particulars of Dry Docks, Wet Docks, Wharves, etc. on the River Thames. Compiled by C. H. JORDAN. Second edition, 7 coloured charts, 103 pp. oblong 8vo. (*1904*) ... ... *net* 2 6

Marine Transport of Petroleum. By H. LITTLE. 66 illus. 263 pp. crown 8vo. (*1890*) 10 6

Questions and Answers for Marine Engineers, with a Practical Treatise on Breakdowns at Sea. By T. LUCAS. 12 folding plates, 515 pp. gilt edges, crown 8vo. (*New York, 1902*) ... *net* 8 0

Reed's Examination Papers for Extra First Class Engineers. Fourth edition, 14 plates and 188 illus. 550 pp. 8vo. (*1902*) ... ... *net* 18 0

Reed's Engineers' Handbook to the Board of Trade Examinations for certificates of Competency as First and Second Class Engineers. Nineteenth edition, 37 plates, 358 illus. 696 pp. 8vo ... ... *net* 14 0

Reed's Marine Boilers. Second edition, crown 8vo *net* 4 6

Reed's Useful Hints to Sea-going Engineers. Fourth edition, 8 plates, 50 illus. 312 pp. crown 8vo. (*1903*) ... ... *net* 3 6

MATERIALS.

Practical Treatise on the Strength of Materials. By T. Box. Fourth edition, 27 plates, 536 pp. 8vo. (*1902*) ... ... *net* 12 6

Treatise on the Origin, Progress, Prevention and Cure of Dry Rot in Timber. By T. A. BRITTON. 10 plates, 519 pp. crown 8vo. (*1875*) 7 6

Twenty Years' Practical Experience of Natural Asphalt and Mineral Bitumen. By W. H. DELANO. 33 illus. 73 pp. crown 8vo, parchment. (*1893*) 2 0

Stone: how to get it and how to use it. By Major-Gen. C. E. LUARD, R.E. 8vo, sewed. (*1890*) ... 2 0

Testing of Pipes and Pipe-joints in the Open Trenches. By M. M. PATERSON. 8vo, sewed (*1879*) 2 0

Solid Bitumens. By S. F. PECKHAM. 23 illus. 324 pp. 8vo. (*New York, 1909*) ... ... *net* 1 1 0

Lubricants, Oils and Greases. By I. I. REDWOOD. 3 plates, 8vo. (*1898*) ... ... *net* 6 6

Practical Treatise on Mineral Oils and their By-Products. By I. I. REDWOOD. 67 illus. 336 pp. demy 8vo. (*1897*) 15 0

Silico-Calcareous Sandstones, or Building Stones from Quartz, Sand and Lime. By E. STOFFLER. 5 plates, 8vo, sewed. (*1901*) ... ... *net* 4 0

Proceedings of the Fifth Congress, International Association for Testing Materials. English edition. 189 illus. 549 pp. demy 8vo. (*1910*).

Paper	*net*	15 0
Cloth	*net*	18 0

MATHEMATICS.

Imaginary Quantities. By M. ARGAND. Translated by PROF. HARDY. 18mo, boards. (*New York*) *net* 2 0

Text Book of Practical Solid Geometry. By E. H. DE V. ATKINSON. Revised by MAJOR B. R. WARD, R.E. Second edition, 17 plates, 8vo. (*1901*) 7 6

Quick and Easy Methods of Calculating, and the Theory and Use of the Slide Rule. By R. G. BLAINE. Third edition, 6 illus. 152 pp. 16mo, leather cloth. (*1907*) 2 6

Symbolic Algebra, or the Algebra of Algebraic Numbers. By W. CAIN. 18mo, boards. (*New York*) ... ... *net* 2 0

Nautical Astronomy. By J. H. COLVIN. 127 pp. crown, 8vo. (*1901*) ... ... *net* 2 6

Chemical Problems. By J. C. FOYE. Fourth edition, 141 pp. 18mo, boards. (*New York, 1898*)... *net* 2 0

Primer of the Calculus. By E. S. GOULD. Second edition, 24 illus. 122 pp. 18mo, boards. (*New York, 1899*) ... ... *net* 2 0

Elementary Treatise on the Calculus for Engineering Students. By J. GRAHAM. Third edition, 276 pp. crown 8vo. (*1905*). (FINSBURY TECHNICAL MANUAL) 7 6

Manual of the Slide Rule. By F. A. HALSEY. Second edition, 31 illus. 84 pp. 18mo, boards. (*New York, 1901*) ... ... *net* 2 0

Reform in Chemical and Physical Calculations. By C. J. T. HANSSEN. 4to. (*1897*) ... *net* 6 6

Algebra Self-Taught. By P. HIGGS. Third edition, 104 pp. crown 8vo. (*1903*) 2 6

Galvanic Circuit investigated Mathematically. By G. S. OHM. Translated by WILLIAM FRANCIS. 269 pp. 18mo, boards. (*New York, 1891*) ... *net* 2 0

Elementary Practical Mathematics. By M. T. ORMSBY. 420 pp. demy 8vo. (*1900*) ... *net* 7 6

Elements of Graphic Statics. By K. VON OTT. Translated by G. S. CLARKE. 93 illus. 128 pp. crown 8vo. (*1901*) 5 0

Figure of the Earth. By F. C. ROBERTS. 18mo, boards. (*New York*) ... ... *net* 2 0

Arithmetic of Electricity. By T. O'C. SLOANE. Thirteenth edition, crown 8vo. (*New York, 1901*) ... ... *net* 4 6

Graphic Method for Solving certain Questions in Arithmetic or Algebra. By G. L. VOSE. Second edition with 28 illus. 62 pp. 18mo, boards. (*New York, 1902*) ... ... *net* 2 0

Problems in Electricity. A Graduated Collection comprising all branches of Electrical Science. By R. WEBER. Translated from the French by E. A. O'KEEFE. 34 illus. 366 pp. crown 8vo. (*1902*). ... ... *net* 7 6

MECHANICAL ENGINEERING.

STEAM ENGINES AND BOILERS, ETC.

Handbook for Mechanical Engineers. By HY. ADAMS. Fourth edition, 426 pp. crown 8vo. (*1897*) ... ... *net* 4 6

Appleby's Handbooks of Machinery. Many illustrations, 8vo. Sections 2, 3, 4 and 6... *each* 3 6

Section 5... ... ... 5 0

Section 1.—Prime Movers. *Out of Print.*
Section 2.—Hoisting Machinery, Winding Engines, etc.
Section 3.—*Out of print.*
Section 4.—Machine Tools and Accessories.
Section 5.—Contractors' Plant and Railway Materials.
Section 6.—Mining, Colonial and Manufacturing Machinery.

Engineers' Sketch Book of Mechanical Movements. By T. W. BARBER. Fifth edition, 3000 illus. 355 pp. 8vo. (*1906*) ... ... *net* 10 6

The Repair and Maintenance of Machinery. By T. W. BARBER. 417 illus. 476 pp. 8vo. (*1895*) ... 10 6

Slide Valve and its Functions, with special reference to Modern Practice in the United States. By J. BEGTRUP. 90 diagrams, 146 pp. medium 8vo. (*New York, 1902*) ... ... *net* 8 0

Practical Treatise on Mill Gearing. By T. BOX. Fifth edition, 11 plates, 128 pp. crown 8vo. (*1892*) 7 6

Safety Valves. By R. H. BUELL. Third edition, 20 illus. 100 pp. 18mo, boards. (*New York, 1898*) *net* 2 0

Machine Design. By Prof. W. L. CATHCART.
Part I. FASTENINGS. 123 illus. 291 pp. demy 8vo. (*New York, 1903*) ... *net* 12 6

Chimney Design and Theory. By W. W. CHRISTIE. Second edition, 54 illus. 192 pp. crown 8vo. (*New York, 1902*) ... ... *net* 12 6

Furnace Draft: its Production by Mechanical Methods. By W. W. CHRISTIE. 5 illus. 80 pp. 18mo, boards. (*New York, 1906*) ... ... *net* 2 0

Working and Management of Steam Boilers and Engines. By F. COLYER. Second edition, 108 pp. crown 8vo. (*1902*) 3 6

The Stokers' Catechism. By W. J. CONNOR. 63 pp. limp cloth. (*1906*) ... ... *net* 1 0

Treatise on the use of Belting for the Transmission of Power. By J. H. COOPER. Fifth edition, 94 illus. 399 pp. demy 8vo. (*New York, 1901*) ... *net* 12 6

The Steam Engine considered as a Thermo-dynamic Machine. By J. H. COTTERILL. Third edition, 39 diagrams, 444 pp. 8vo. (*1896*) ... 15 0

Fireman's Guide, a Handbook on the Care of Boilers. By K. P. DAHLSTROM. Ninth edition fcap. 8vo. (*New York, 1902*) ... ... *net* 1 6

Heat for Engineers. By C. R. DARLING. 110 illus. 430 pp. 8vo. (*1908.*) (FINSBURY TECHNICAL MANUAL.) ... ... *net* 12 6

Diseases of a Gasolene Automobile, and How to Cure Them. By A. L. DYKE and G. P. DORRIS. 127 illus. 201 pp. crown 8vo. (*New York, 1903*) *net* 6 6

Belt Driving. By G. HALLIDAY. 3 folding plates, 100 pp. 8vo. (*1894*) 3 6

Worm and Spiral Gearing. By F. A. HALSEY. 13 plates, 85 pp. 18mo, boards. (*New York, 1903*) *net* 2 0

Commercial Efficiency of Steam Boilers. By A. HANSSEN. Large 8vo, sewed. (*1898*) ... 0 6

Corliss Engine. By J. T. HENTHORN. Third edition, 23 illus. 95 pp. square 16mo. (S. & C. SERIES, No. 20.) (*New York, 1910*) ... *net* 1 6

Liquid Fuel for Mechanical and Industrial Purposes. By E. A. BRAYLEY HODGETTS. 106 illus. 129 pp. 8vo. (*1890*) 5 0

Elementary Text-Book on Steam Engines and Boilers. By J. H. KINEALY. Fourth edition, 106 illus. 259 pp. 8vo. (*New York, 1903*) ... *net* 8 6

Centrifugal Fans. By J. H. KINEALY. 33 illus. 206 pp. fcap. 8vo, leather. (*New York, 1905*) *net* 12 6

Mechanical Draft. By J. H. KINEALY. 27 original tables and 13 plates, 142 pp. crown 8vo. (*New York, 1906*) ... ... *net* 8 6

The A. B. C. of the Steam Engine, with a description of the Automatic Governor. By J. P. LISK. 6 plates, 12mo. (S. & C. SERIES, No. 17.) (*New York, 1910*) ... ... *net* 1 6

Valve Setting Record Book. By P. A. LOW. 8vo, boards... ... ... 1 6

The Lay-out of Corliss Valve Gears. By S. A. MOSS. Second edition, 3 plates, 108 pp. 18mo, boards. (*New York, 1906*) ... ... *net* 2 0

Steam Boilers, their Management and Working. By J. PEATTIE. Fifth edition, 35 illus. 230 pp. crown 8vo. (*1906*) ... ... *net* 4 6

Treatise on the Richards Steam Engine Indicator. By C. T. PORTER. Sixth edition, 3 plates and 73 diagrams, 285 pp. 8vo. (*1902*) 9 0

Practical Treatise on the Steam Engine. By A. RIGG. Second edition, 103 plates, 378 pp. demy 4to. (*1894*) 1 5 0

Power and its Transmission. A Practical Handbook for the Factory and Works Manager. By T. A. SMITH. 76 pp. fcap. 8vo. (*1910*) ... *net* 2 0

Drawings for Medium Sized Repetition Work. By R. D. SPINNEY. With 47 illus. 130 pp. 8vo. (*1909*) ... ... *net* 3 6

Slide Valve Simply Explained. By W. J. TENNANT. Revised by J. H. KINEALY. 41 illus. 83 pp. crown 8vo. (*New York, 1899*) ... *net* 4 6

Shaft Governors. By W. TRINKS and C. HOOSUM. 27 illus. 97 pp. 18mo, boards. (*New York, 1905*) *net* 2 0

Slide and Piston Valve Geared Steam Engines. By W. H. UHLAND. 47 plates and 314 illus. 155 pp. Two vols. folio, half morocco. (*1882*) 1 16 0

How to run Engines and Boilers. By E. P. WATSON. Fifth edition, 31 illus. 160 pp. crown 8vo. (*New York, 1904*) 3 6

Position Diagram of Cylinder with Meyer Cut-off. By W. H. WEIGHTMAN. On card. (*New York*) ... ... *net* 1 0

Practical Method of Designing Slide Valve Gearing. By E. J. WELCH. 69 diagrams, 283 pp. Crown 8vo. (*1890*) 6 0

Elements of Mechanics. By T. W. WRIGHT. Eighth edition, illustrated, 382 pp. 8vo. (*New York, 1909*) ... ... *net* 10 6

METALLURGY.

IRON AND STEEL MANUFACTURE.

Life of Railway Axles. By T. ANDREWS. 8vo, sewed. (*1895*) 1 0

Microscopic Internal Flaws in Steel Rails and Propeller Shafts. By T. ANDREWS. 8vo, sewed. (*1896*) 1 0

Microscopic Internal Flaws, Inducing Fracture in Steel. By T. ANDREWS. 8vo, sewed. (*1896*) 2 0

Relations between the Effects of Stresses slowly applied and of Stresses suddenly applied in the case of Iron and Steel: Comparative Tests with Notched and Plain Bars. By P. BREUIL. 23 plates and 60 illus. 151 pp. 8vo. (*1904*) *net* 8 0

Brassfounders' Alloys. By J. F. BUCHANAN. Illustrated, 129 pp. crown 8vo. (*1905*) ... *net* 4 6

Foundry Nomenclature. The Moulder's Pocket Dictionary and concise guide to Foundry Practice. By JOHN F. BUCHANAN. Illustrated, 225 pp. crown 8vo. (*1903*) ... ... *net* 5 0

American Standard Specifications for Steel. By A. L. COLBY. Second edition, revised, 103 pp. crown 8vo. (*New York, 1902*) ... ... *net* 5 0

Galvanised Iron: its Manufacture and Uses. By J. DAVIES. 139 pp. 8vo. (*1899*) ... ... *net* 5 0

Management of Steel. By G. EDE. Seventh edition, 216 pp. crown 8vo. (*1903*) 5 0

Galvanising and Tinning, with a special Chapter on Tinning Grey Iron Castings. By W. T. FLANDERS. 8vo. (*New York*) ... ... *net* 8 6

Cupola Furnace. A practical treatise on the Construction and Management of Foundry Cupolas. By E. KIRK. Third edition, 78 illus. 450 pp. demy 8vo. (*New York, 1910*) ... *net* 15 0

Practical Notes on Pipe Founding. By J. W. MACFARLANE. 15 plates, 148 pp. 8vo 12 6

Atlas of Designs concerning Blast Furnace Practice. By M. A. PAVLOFF. 127 plates, 14 in. by 10½ in. oblong, sewed. (*1902*) ... ... *net* 1 1 0

Album of Drawings relating to the Manufacture of Open Hearth Steel. By M. A. PAVLOFF.

Part I. Open Hearth Furnaces. 52 plates, 14 in. by 10½ in. oblong folio in portfolio. (*1904*) ... ... *net* 12 0

Metallography Applied to Siderurgic Products. By H. SAVOIA. Translated by R. G. CORBET. With 94 illus. 180 pp. crown 8vo. (*1910*) *net* 4 6

Modern Foundry Practice. Including revised subject matter and tables from SPRETSON's "Casting and Founding." By J. SHARP. Second edition, 272 illus. 759 pp. 8vo. (*1905*) ... *net* 1 1

Roll Turning for Sections in Steel and Iron. By A. SPENCER. Second edition, 78 plates, 4to. (*1894*) 1 10

METRIC TABLES.

French Measure and English Equivalents. By J. BROOK. Second edition, 80 pp. fcap. 32mo, roan. (*1906*) ... ... *net* 1 0

A Dictionary of Metric and other useful Measures. By L. CLARK. 113 pp. 8vo. (*1891*) 6 0

English Weights, with their Equivalents in kilogrammes per cent. By F. W. A. LOGAN. 96 pp. fcap. 32mo, roan. (*1906*) ... ... *net* 1 0

Metric Weights with English Equivalents. By H. P. MCCARTNEY. 84 pp. fcap. 32mo. (*1907*) *net* 1 0

Metric Tables. By Sir G. L. MOLESWORTH. Fourth edition, 95 pp. royal 32mo. (*1909*) ... *net* 2 0

Tables for Setting out Curves from 200 metres to 4000 metres by tangential angles. By H. WILLIAMSON. 4 illus. 60 pp. 18mo. (*1908*) *net* 2 0

MINERALOGY AND MINING.

Rock Blasting. By G. G. ANDRE. 12 plates and 56 illus. in text, 202 pp. 8vo. (*1878*) 5 0

Winding Plants for Great Depth. By H. C. BEHR. In two parts. 8vo, sewed. (*1902*) *net* 2 2 0

Practical Treatise on Hydraulic Mining in California. By A. J. BOWIE, Jun. Tenth edition, 73 illus. 313 pp. royal 8vo. (*New York, 1905*) ... ... *net* 1 1 0

Manual of Assaying Gold, Silver, Copper and Lead Ores. By W. L. BROWN. Twelfth edition, 132 illus. 589 pp. crown 8vo. (*New York, 1907*) *net* 10 6

Fire Assaying. By E. W. BUSKETT. 69 illus. 105 pp. crown 8vo. (*New York, 1907*) ... *net* 4 6

Tin: Describing the Chief Methods of Mining, Dressing, etc. By A. G. CHARLETON. 15 plates, 83 pp. crown 8vo. (*1884*) 12 6

Gold Mining and Milling in Western Australia, with Notes upon Telluride Treatment, Costs and Mining Practice in other Fields. By A. G. CHARLETON. 82 illus. and numerous plans and tables, 648 pp. super-royal 8vo. (*1903*) ... *net* 1 5 0

Miners' Geology and Prospectors' Guide. By G. A. CORDER. 29 plates, 224 pp. crown 8vo. (*1907*) ... ... *net* 5 0

Blasting of Rock in Mines, Quarries, Tunnels, etc. By A. W. and Z. W. DAW. Second edition, 90 illus. 316 pp. demy 8vo. (*1909*) ... *net* 15 0

Handbook of Mineralogy; determination and description of Minerals found in the United States. By J. C. FOYE. 18mo, boards. (*New York, 1886*) *net* 2 0

Conversations on Mines. By W. HOPTON. Ninth edition, 33 illus. 356 pp. crown 8vo. (*1891*) ... 4 6

Our Coal Resources at the End of the Nineteenth Century. By Prof. E. HULL. 157 pp. demy 8vo. (*1897*) 6 0

Hydraulic Gold Miners' Manual. By T. S. G. KIRKPATRICK. Second edition, 12 illus. 46 pp. crown 8vo. (*1897*) 4 0

Economic Mining. By C. G. W. LOCK. 175 illus. 680 pp. 8vo. (*1895*) ... ... *net* 10 6

Gold Milling: Principles and Practice. By C. G. W. LOCK. 200 illus. 850 pp. demy 8vo. (*1901*) *net* 1 1 0

Mining and Ore-Dressing Machinery. By C. G. W. LOCK. 639 illus. 466 pp. super-royal 4to. (*1890*) 1 5 0

Miners' Pocket Book. By C. G. W. LOCK. Fifth edition, 233 illus. 624 pp. fcap. 8vo, roan, gilt edges. (*1908*) ... ... *net* 10 6

Tests for Ores, Minerals and Metals of Commercial Value. By R. L. MCMECHEN. 152 pp. 12mo. (*New York, 1907*) ... ... *net* 5 6

Practical Handbook for the Working Miner and Prospector, and the Mining Investor. By J. A. MILLER. 34 illus. 234 pp. crown 8vo. (*1897*) 7 6

Theory and Practice of Centrifugal Ventilating Machines. By D. MURGUE. 7 illus. 81 pp. 8vo. (*1883*) 5 0

Examples of Coal Mining Plant. By J. POVEY-HARPER. Second edition, 40 plates, 26 in. by 20 in. (*1895*) ... ... *net* 4 4 0

Examples of Coal Mining Plant, Second Series. By J. POVEY-HARPER. 10 plates, 26 in. by 20 in. (*1902*) ... ... *net* 1 12 6

ORGANISATION.

ACCOUNTS, CONTRACTS AND MANAGEMENT.

Organisation of Gold Mining Business, with Specimens of the Departmental Report Books and the Account Books. By NICOL BROWN. Second edition, 220 pp. fcap. folio. (*1903*) *net* 1 5 0

Manual of Engineering Specifications and Contracts. By L. M. HAUPT. Eighth edition, 338 pp. 8vo. (*New York, 1900*) ... ... *net* 12 6

Depreciation of Factories, Municipal, and Industrial Undertakings, and their Valuation. By E. MATHESON. Fourth edition, 230 pp. 8vo, cloth. (*1910*) ... ... *net* 10 6

Aid Book to Engineering Enterprise. By E. MATHESON. Third edition, 916 pp. 8vo, buckram. (*1898*) 1 4 0

Office Management. A handbook for Architects and Civil Engineers. By W. KAYE PARRY. New impression, 187 pp. medium 8vo. (*1908*) *net* 5 0

Commercial Organisation of Engineering Factories. By H. SPENCER. 92 illus. 221 pp. 8vo. (*1907*) ... ... *net* 10 6

PHYSICS.

COLOUR, HEAT AND EXPERIMENTAL SCIENCE.

The Entropy Diagram and its Applications. By M. J. BOULVIN. 38 illus. 82 pp. demy 8vo. (*1898*) 5 0

Physical Problems and their Solution. By A. BOURGOUGNON. 224 pp. 18mo, boards. (*New York, 1897*) ... ... *net* 2 0

Heat for Engineers. By C. R. DARLING. 110 illus. 430 pp. 8vo. (*1908*) (FINSBURY TECHNICAL MANUAL) ... ... *net* 12 6

The Colourist. A method of determining colour harmony. By J. A. H. HATT. 2 coloured plates, 80 pp. 8vo. (*New York, 1908*) ... ... *net* 6 6

Engineering Thermodynamics. By C. F. HIRSCHFELD. 22 illus. 157 pp. 18mo, boards. (*New York, 1907*) ... ... *net* 2 0

Experimental Science: Elementary, Practical and Experimental Physics. By G. M. HOPKINS. Twenty-third edition, 920 illus. 1100 pp. large 8vo. (*New York, 1902*) ... ... *net* 1 1 0

Reform in Chemical and Physical Calculations. By C. J. T. HANSSEN. Demy 4to. (*1897*) *net* 6 6

Introduction to the Study of Colour Phenomena. By J. W. LOVIBOND. 10 hand coloured plates, 48 pp. 8vo. (*1905*) ... ... *net* 5 0

Practical Laws and Data on the Condensation of Steam in Bare Pipes; to which is added a Translation of PECLET's Theory and Experiments on the Transmission of Heat through Insulating Materials. By C. P. PAULDING. 184 illus. 102 pp. demy 8vo. (*New York, 1904*) *net* 8 6

The Energy Chart. Practical application to reciprocating steam-engines. By Captain H. R. SANKEY. 157 illus. 170 pp. 8vo. (*1907*) ... *net* 7 6

PRICE BOOKS.

Approximate Estimates. By T. E. COLEMAN. Third edition, 481 pp. oblong 32mo, leather. (*1907*) ... ... *net* 5 0

Railway Stores Price Book. By W. O. KEMPTHORNE. 500 pp. demy 8vo. (*1909*) ... *net* 10 6

Spons' Engineers' Price Book. A Synopsis of Current Prices and Rates for Engineering Materials and Products. Edited by T. G. MARLOW. 650 pp. folio. (1904)... ... ... *net* 7 6

Spons' Architects' and Builders' Pocket Price-Book, Memoranda, Tables and Prices. Edited by CLYDE YOUNG. Revised by STANFORD M. BROOKS. Illustrated, 552 pp. 16mo, leather cloth (size 6½ in. by 3¾ in. by ½ in. thick). Issued annually ... ... *net* 3 0

RAILWAY ENGINEERING.

Practical Hints to Young Engineers Employed on Indian Railways. By A. W. C. ADDIS. With 14 illus. 154 pp. 12mo. (*1910*) ... *net* 3 6

Railroad Curves and Earthwork. By C. F. ALLEN. Third edition, 4 plates, 198 pp. 12mo, leather, gilt edges. (*New York, 1903*) ... *net* 8 6

Field and Office Tables, specially applicable to Railroads. By C. F. ALLEN. 293 pp. 16mo, leather. (*New York, 1903*) ... ... *net* 8 6

The two above combined in one vol. limp leather ... *net* 12 6

Up-to-date Air Brake Catechism. By R. H. BLACKALL. Twenty-third edit. 5 coloured plates, 96 illus. 305 pp. crown 8vo. (*New York, 1908*) *net* 8 6

Simple and Automatic Vacuum Brakes. By C. BRIGGS, G.N.R. 11 plates, 8vo. (*1892*) ... 4 0

Notes on Permanent-way Material, Plate-laying, and Points and Crossings. By W. H. COLE. Fifth edition, 32 plates, 176 pp. crown 8vo. (*1905*) *net* 7 6

Statistical Tables of the Working of Railways in various countries up to the year 1904. By J. D. DIACOMIDIS. Second edition, 84 pp. small folio, sewed. (*1906*) ... ... *net* 16 0

Locomotive Breakdowns, Emergencies and their Remedies. By GEO. L. FOWLER, M.E. and W. W. WOOD. Fifth edition, 92 illus. 266 pp. 12mo. (*New York, 1908*) ... ... *net* 4 6

Permanent-Way Diagrams. By F. H. FRERE. Mounted on linen in cloth covers. (*1908*) *net* 3 0

Formulæ for Railway Crossings and Switches. By J. GLOVER. 9 illus. 28 pp. royal 32mo. (*1896*) 2 6

Data relating to Railway Curves and Super-elevations, shown graphically. By J. H. HAISTE. On folding card for pocket use ... ... *net* 0 6

Setting out of Tube Railways. By G. M. HALDEN. 9 plates, 46 illus. 68 pp. crown 4to. (*1907*) *net* 10 6

Railway Engineering, Mechanical and Electrical. By J. W. C. HALDANE. 141 illus. 563 pp. 8vo. (*1897*) 15 0

Tables for setting-out Railway Curves. By C. P. HOGG. A series of cards in neat cloth case ... 4 6

The Construction of the Modern Locomotive. By G. HUGHES. 300 illus. 261 pp. 8vo. (*1894*) 9 0

Practical Hints for Light Railways at Home and Abroad. By F. R. JOHNSON. 6 plates, 31 pp. crown 8vo. (*1896*) 2 6

Handbook on Railway Stores Management. By W. O. KEMPTHORNE. 268 pp. demy 8vo. (*1907*) *net* 10 6

Railway Stores Price Book. By W. O. KEMPTHORNE. 487 pp. demy 8vo. (*1909*) ... *net* 10 6

Tables for setting out Curves for Railways, Roads, Canals, etc. By A. KENNEDY and R. W. HACKWOOD. 32mo ... ... *net* 2 0

Railroad Location Surveys and Estimates. By F. LAVIS. 68 illus. 270 pp. 8vo. (*New York, 1906*) *net* 12 6

Tables for Computing the Contents of Earth-work in the Cuttings and Embankments of Railways. By W. MACGREGOR. Royal 8vo ... 6 0

Bridge and Tunnel Centres. By J. B. MCMASTERS. Illustrated, 106 pp. 18mo, boards. (*New York, 1893*) ... ... *net* 2 0

Pioneering. By F. SHELFORD. Illustrated, 88 pp. crown 8vo. (*1909*) ... ... *net* 3 0

Handbook on Railway Surveying for Students and Junior Engineers. By B. STEWART. 55 illus. 98 pp. crown 8vo. (*1909*) ... ... *net* 2 6

Spiral Tables. By J. G. SULLIVAN. 47 pp. 12mo, leather. (*New York, 1908*) ... ... *net* 6 6

Modern British Locomotives. By A. T. TAYLOR. 100 diagrams of principal dimensions, 118 pp. oblong 8vo. (*1907*) ... ... *net* 4 6

Locomotive Slide Valve Setting. By C. E. TULLY. Illustrated, 18mo ... ... *net* 1 0

The Walschaert Locomotive Valve Gear. By W. W. WOOD. 4 plates and set of movable cardboard working models of the valves, 193 pp. crown 8vo. (*New York, 1907*) ... ... *net* 6 6

The Westinghouse E.T. Air-Brake Instruction Pocket Book. By W. W. WOOD. 48 illus. including many coloured plates, 242 pp. crown 8vo. (*New York, 1909*) ... ... *net* 8 6

SANITATION, PUBLIC HEALTH AND MUNICIPAL ENGINEERING.

Sewers and Drains for Populous Districts. By J. W. ADAMS. Ninth edition, 81 illus. 236 pp. 8vo. (*New York, 1902*) ... ... *net* 10 6

Public Abattoirs, their Planning, Design and Equipment. By R. S. AYLING. 33 plates, 100 pp. demy 4to. (*1908*) ... ... *net* 8 6

Sewage Purification. By E. BAILEY-DENTON. 8 plates, 44 pp. 8vo. (*1896*) 5 0

Water Supply and Sewerage of Country Mansions and Estates. By E. BAILEY-DENTON. 76 pp. crown 8vo. (*1901*) ... ... *net* 2 6

Sewerage and Sewage Purification. By M. N. BAKER. Second edition, 144 pp. 18mo, boards. (*New York, 1905*) ... ... *net* 2 0

Sewage Irrigation by Farmers. By R. W. P. BIRCH. 8vo, sewed. (*1878*) 2 6

Sanitary House Drainage, its Principles and Practice. By T. E. COLEMAN. 98 illus. 206 pp. crown 8vo. (*1896*) 6 0

Stable Sanitation and Construction. By T. E. COLEMAN. 183 illus. 226 pp. crown 8vo. (*1897*) 6 0

Public Institutions, their Engineering, Sanitary and other Appliances. By F. COLYER. 231 pp. 8vo. (*1889*) ... ... *net* 2 0

Discharge of Pipes and Culverts. By P. M. CROSTHWAITE. Large folding sheet in case *net* 2 6

A Complete and Practical Treatise on Plumbing and Sanitation: Hot Water Supply, Warming and Ventilation, Steam Cooking, Gas, Electric Light, Bells, etc., with a complete Schedule of Prices of Plumber's Work. By G. B. DAVIS and F. DYE. 2 vols. 637 illus. and 21 folding plates, 830 pp. 4to, cloth. (*1899*) *net* 1 10 0

Standard Practical Plumbing. By P. J. DAVIES.
Vol. I. Fourth edition, 768 illus. 355 pp. royal 8vo. (*1905*) ... ... *net* 7 6
Vol. II. Second edition, 953 illus. 805 pp. (*1905*) ... ... *net* 10 6
Vol. III. 313 illus. 204 pp. (*1905*) ... *net* 5 0

Conservancy, or Dry Sanitation versus Water Carriage. By J. DONKIN. 7 plates, 33 pp. 8vo, sewed. (*1906*) ... ... *net* 1 0

Sewage Disposal Works, their Design and Construction. By W. C. EASDALE. With 160 illus. 264 pp. demy 8vo. (*1910*) ... ... *net* 10 6

House Drainage and Sanitary Plumbing. By W. P. GERHARD. Tenth edition, 6 illus. 231 pp. 18mo, boards. (*New York, 1902*) ... ... *net* 2 0

Engineering Work in Towns and Cities. By E. McCULLOCH. 44 illus. 502 pp. crown 8vo. (*New York, 1908*) ... ... *net* 12 6

The Treatment of Septic Sewage. By G. W. RAFTER. 137 pp. 18mo, boards. (*New York, 1904*) ... ... *net* 2 0

Reports and Investigations on Sewer Air and Sewer Ventilation. By R. H. REEVES. 8vo, sewed. (*1894*) 1 0

The Law and Practice of Paving Private Street Works. By W. SPINKS. Fourth edition, 256 pp. 8vo. (*1904*) ... ... *net* 12 6

STRUCTURAL DESIGN.

(*See* BRIDGES AND ROOFS.)

TELEGRAPH CODES.

New Business Code. 320 pp. narrow 8vo. (Size 4¾ in. by 7¾ in. and ½ in. thick, and weight 10 oz.) (*New York, 1909*) ... ... *net* 1 10 0

Miners' and Smelters' Code (formerly issued as the **Master Telegraph Code**). 448 pp. 8vo, limp leather, weight 14 oz. (*New York, 1899*) *net* 2 10 0

Billionaire Phrase Code, containing over two million sentences coded in single words. 56 pp. 8vo, leather. (*New York, 1908*) ... ... *net* 6 6

WARMING AND VENTILATION.

Hot Water Supply. By F. DYE. Fifth edition, 48 illus. 86 pp. crown 8vo. (*1902*) ... *net* 3 0

A Practical Treatise upon Steam Heating. By F. DYE. 129 illus. 246 pp. demy 8vo. (*1901*) *net* 10 0

Practical Treatise on Warming Buildings by Hot Water. By F. DYE. 192 illus. 319 pp. 8vo. cloth. (*1905*) ... ... *net* 8 6

Charts for Low Pressure Steam Heating. By J. H. KINEALY. Small folio. (*New York*) ... 4 6

Formulæ and Tables for Heating. By J. H. KINEALY. 18 illus. 53 pp. 8vo. (*New York, 1899*) 3 6

Mechanics of Ventilation. By G. W. RAFTER. Second edition, 18mo, boards. (*New York, 1896*) *net* 2 0

Principles of Heating. By W. G. SNOW. 62 illus. 161 pp. 8vo. (*New York, 1907*) ... ... *net* 8 6

Furnace Heating. By W. G. SNOW. Fourth edition, 52 illus. 216 pp. 8vo. (*New York, 1909*) ... *net* 6 6

Ventilation of Buildings. By W. G. SNOW and T. NOLAN. 83 pp. 18mo, boards. (*New York, 1906*) *net* 2 0

Heating Engineers' Quantities. By W. L. WHITE and G. M. WHITE. 4 plates, 33 pp. folio. (*1910*) *net* 10 6

WATER SUPPLY.

(*See also* HYDRAULICS.)

Potable Water and Methods of Testing Impurities. By M. N. BAKER. 97 pp. 18mo, boards. (*New York, 1905*) ... ... *net* 2 0

Manual of Hydrology. By N. BEARDMORE. New impression, 18 plates, 384 pp. 8vo. (*1906*) *net* 10 6

Boiler Waters, Scale, Corrosion and Fouling. By W. W. CHRISTIE. 77 illus. 235 pp. 8vo, cloth. (*New York, 1907*) ... ... *net* 12 6

Water Softening and Purification. By H. COLLET. Second edition, 6 illus. 170 pp. crown 8vo. (*1908*) *net* 5 0

Treatise on Water Supply, Drainage and Sanitary Appliances of Residences. By F. COLYER. 100 pp. crown 8vo. (*1899*) ... ... *net* 1 6

Report on the Investigations into the Purification of the Ohio River Water at Louisville, Kentucky. By G. W. FULLER. 8 plates, 4to, cloth. (*New York, 1898*) 2 2 0

Purification of Public Water Supplies. By J. W. HILL. 314 pp. 8vo. (*New York, 1898*) 10 6

Well Boring for Water, Brine and Oil. By C. ISLER. *New edition in the Press.*

Method of Measuring Liquids Flowing through Pipes by means of Meters of Small Calibre. By Prof. G. LANGE. 1 plate, 16 pp. 8vo, sewed *net* 0 6

On Artificial Underground Water. By G. RICHERT. 16 illus. 33 pp. 8vo, sewed. (*1900*) *net* 1 6

Notes on Water Supply in new Countries. By F. W. STONE. 18 plates, 42 pp. crown 8vo. (*1888*) 5 0

The Principles of Waterworks Engineering. By J. H. T. TUDSBERY and A. W. BRIGHTMORE. Third edition, 13 folding plates, 130 illus. 447 pp. demy 8vo. (*1905*) ... ... *net* 1 1 0

WORKSHOP PRACTICE.

A Handbook for Apprenticed Machinists. By O. J. BEALE. Second edition, 89 illus., 141 pp. 16mo. (*New York, 1901*) ... ... *net* 2 6

Bicycle Repairing. By S. D. V. BURR. Sixth edition, 200 illus. 208 pp. 8vo. (*New York, 1903*) *net* 4 6

Practice of Hand Turning. By F. CAMPIN. Third edition, 99 illus. 307 pp. crown 8vo. (*1883*) 3 6

Calculation of Change Wheels for Screw Cutting on Lathes. By D. DE VRIES. 46 illus. 83 pp. 8vo. (*1908*) ... ... *net* 3 0

Milling Machines and Milling Practice. By D. DE VRIES. With 536 illus. 464 pp. medium 8vo. (*1910*) ... ... *net* 14 0

French-Polishers' Manual. By a French-Polisher. 31 pp. royal 32mo, sewed. (*1902*) ... *net* 0 6

Art of Copper Smithing. By J. FULLER. Third edition, 475 illus. 325 pp. royal 8vo. (*New York, 1901*) ... ... *net* 12 6

Saw Filing and Management of Saws. By R. GRIMSHAW. New edition, 81 illus. 16mo. (*New York, 1906*) ... ... *net* 3 6

Paint and Colour Mixing. By A. S. JENNINGS. Fourth edition. 14 coloured plates, 190 pp. 8vo. (*1910*) ... ... *net* 5 0

The Mechanician: a Treatise on the Construction and Manipulation of Tools. By C. KNIGHT. Fifth edition, 96 plates, 397 pp. 4to. (*1897*) ... 18 0

Turner's and Fitter's Pocket Book. By J. LA NICCA. 18mo, sewed 0 6

Tables for Engineers and Mechanics, giving the values of the different trains of wheels required to produce Screws of any pitch. By LORD LINDSAY. Second edition, royal 8vo, oblong... ... ... 2 0

Screw-cutting Tables. By W. A. MARTIN. Seventh edition, royal 8vo, oblong 1 0

Metal Plate Work, its Patterns and their Geometry, for the use of Tin, Iron and Zinc Plate Workers. By C. T. MILLIS. Fourth edition, 280 diagrams, 470 pp. crown 8vo. (*1906*)... ... ... 9 0

Engineers' and General Smiths' Work. The smith and forgeman's handbook of practical smithing and forging. By T. MOORE. 401 illus. 248 pp. crown 8vo. (*1906*)... ... ... *net* 5 0

Modern Machine Shop Construction, equipment and management. By O. E. PERRIGO. 208 illus. 343 pp. crown 4to. (*New York, 1906*) ... *net* 21 0

Turner's Handbook on Screw-cutting, Coning, etc. By W. PRICE. Fcap. 8vo 1 0

Introduction to Eccentric Spiral Turning. By H. C. ROBINSON. 12 plates, 23 illus. 48 pp. 8vo. (*1906*) ... ... *net* 4 6

Manual of Instruction in Hard Soldering. By H. ROWELL. Sixth edition, 7 illus. 66 pp. crown 8vo. (*New York, 1910*) ... ... *net* 3 0

Pocket Book on Boilermaking, Shipbuilding, and the Steel and Iron Trades in General. By M. J. SEXTON. Sixth edition, 85 illus. 319 pp. royal 32mo, roan, gilt edges. (*1909*) ... ... *net* 5 0

Power and its Transmission. A Practical Handbook for the Factory and Works Manager. By T. A. SMITH. 76 pp. fcap. 8vo. (*1910*) ... *net* 2 0

Spons' Mechanics' Own Book: A Manual for Handicraftsmen and Amateurs. Sixth edition, 1430 illus. 720 pp. demy 8vo. (*1903*) 6 0

Ditto ditto half morocco 7 6

Spons' Workshop Receipts for Manufacturers, Mechanics and Scientific Amateurs. New and thoroughly revised edition, crown 8vo. (*1909*) ... ... *each net* 3 0

Vol. I. ACETYLENE LIGHTING *to* DRYING. 223 illus. 532 pp.
Vol. II. DYEING *to* JAPANNING. 259 illus. 540 pp.
Vol. III. JOINTING PIPES *to* PUMPS. 256 illus. 528 pp.
Vol. IV. RAINWATER SEPARATORS *to* WINES. 250 illus. 520 pp.

Gauges at a Glance. By T. TAYLOR. Second edition, post 8vo, oblong, with tape converter. (*1900*) ... ... *net* 5 0

Simple Soldering, both Hard and Soft. By E. THATCHER. 52 illus. 76 pp. crown 8vo, limp. (S. & C. SERIES, No. 18.) (*New York, 1910*) *net* 1 6

The Modern Machinist. By J. T. USHER. Fifth edition. 257 illus. 322 pp. 8vo. (*New York, 1904*) *net* 10 6

Practical Wood Carving. By C. J. WOODSEND. 108 illus. 86 pp. 8vo. (*New York, 1897*) ... *net* 4 6

American Tool Making and Interchangeable Manufacturing. By J. W. WOODWORTH. 600 illus. 544 pp. demy 8vo. (*New York, 1905*) ... *net* 17 0

USEFUL TABLES.

Weights and Measurements of Sheet Lead. By J. ALEXANDER. 32mo, roan ... ... *net* 1 6

Tables of Parabolic Curves for the use of Railway Engineers and others. By G. T. ALLEN. Fcap. 16mo 4 0

Barlow's Tables of Squares, Cubes, Square Roots, Cube Roots and Reciprocals. Crown 8vo ... 6 0

Tables of Squares. By E. E. BUCHANAN. Ninth edition, 12mo ... ... *net* 4 6

Land Area Tables. By W. CODD. Square 16mo, on a sheet mounted on linen and bound in cloth 3 6

Tables for Setting out Curves from 101 to 5000 feet radius. By H. A. CUTLER and F. J. EDGE. Royal 32mo ... ... *net* 2 6

Transition Curves. By W. G. FOX. 18mo, boards. (*New York*) ... ... *net* 2 0

Tables of some of the Principal Speeds occurring in Mechanical Engineering, expressed in Metres per second. By P. KEERAYEFF. 18mo, sewed ... 0 6

Calculating Scale. A Substitute for the Slide Rule. By W. KNOWLES. Crown 8vo, leather ... *net* 1 0

Planimeter Areas. Multipliers for various scales. By H. B. MOLESWORTH. Folding sheet in cloth case ... ... *net* 1 0

Tables of Seamless Copper Tubes. By I. O'TOOLE. 69 pp. oblong fcap. 8vo. (*1908*) ... ... *net* 3 6

Rownson's Iron Merchants' Tables and Memoranda, Weights and Measures. 86 pp. 32mo, leather... ... ... 3 6

Spons' Tables and Memoranda for Engineers. By J. T. HURST, C.E. Twelfth edition, 278 pp. 64mo, roan, gilt edges. (*1907*) ... ... *net* 1 0
Ditto ditto in celluloid case *net* 1 6

Optical Tables and Data, for the use of Opticians. By Prof. S. P. THOMPSON. Second edition, 130 pp. oblong 8vo. (*1907*) ... ... *net* 6 0

Traverse Table, showing Latitudes and Departure for each Quarter degree of the Quadrant, and for distances from 1 to 100, etc.; 18mo, boards *net* 2 0

Fifty-four Hours' Wages Calculator. By H. N. WHITELAW. Second edition, 8vo ... ... *net* 2 6

Wheel Gearing. Tables of Pitch Line Diameters, etc. By A. WILDGOOSE and A. J. ORR. 175 pp. fcap. 32mo. (*1903*) ... ... *net* 2 0

MISCELLANEOUS.

Time Chart. The time of day at any place in the World at a glance. By Dr. F. J. B. CORDEIRO. On card ... ... *net* 1 0

The Atmosphere: Its Characteristics and Dynamics. By F. J. B. CORDEIRO. With 35 illus. 129 pp. medium 8vo. (*New York, 1910*) ... *net* 10 6

Model Steam Engine Design. By R. M. DE VIGNIER. 34 illus. 94 pp. crown 8vo, limp. (*New York, 1907*) ... ... *net* 1 6

Popular Engineering. By F. DYE. 704 illus. 477 pp. crown 4to. (*1895*) ... ... *net* 5 0

The Phonograph, and how to construct it. By W. GILLETT. 6 folding plates, 87 pp. crown 8vo. (*1892*) 5 0

Particulars of Dry Docks, Wet Docks, Wharves, etc. on the River Thames. By C. N. JORDAN. Second edition, 7 coloured charts, 103 pp. oblong 8vo. (*1904*) ... ... *net* 2 6

Spons' Engineer's Diary and Year Book, issued annually. 4to 3 6

New Theories in Astronomy. By W. STIRLING. 335 pp. demy 8vo. (*1906*) ... ... *net* 8 6

The American Hardware Store. A Manual of approved methods of arranging and displaying hardware. By R. R. WILLIAMS. 500 illus. 448 pp. royal 8vo. (*New York, 1896*) ... *net* 7 6

Practical Wood Carving. By C. J. WOODSEND. 108 illus. 86 pp. 8 vo. (*New York, 1897*) ... *net* 4 6

Inventions, How to Protect, Sell and Buy Them. By F. WRIGHT. Crown 8vo, limp. (S. & C. SERIES, No. 10.) (*New York, 1908*) ... *net* 1 6

SCIENCE ABSTRACTS

SECTION A.—PHYSICS.
SECTION B.—ENGINEERING.

ISSUED MONTHLY BY THE

INSTITUTION OF ELECTRICAL ENGINEERS,

WITH THE CO-OPERATION OF

The Physical Society of London,
The American Physical Society,
The American Institute of Electrical Engineers, and
The American Electro-Chemical Society.

Section A.—PHYSICS.

Annual Subscription, **18s.** *net, post-free.*

CONTENTS:—General Physics—Light — Heat — Electricity and Magnetism—Chemical Physics and Electro-Chemistry.

During 1908 and 1909 over 4200 Abstracts and References were included under the above headings.

Section B.—ELECTRICAL ENGINEERING.

Annual Subscription, **18s.** *net, post-free.*

CONTENTS:—Steam Plant, Gas and Oil Engines—Industrial Electro-Chemistry, General Electrical Engineering, and Properties and Treatment of Materials—Generators, Motors and Transformers —Electrical Distribution, Traction and Lighting—Telegraphy and Telephony.

During 1908 and 1909 over 2800 Abstracts and References were included under the above headings.

Annual Subscription for Both Sections, **30s.** *net, post-free.*

Binding Cases for all Vols. are to be had, price 1*s. each (post-free* 1*s.* 2*d.*).

E. & F. N. SPON, Ltd., 57 Haymarket, London, S.W.

The Journal of the Iron and Steel Institute.

Edited by G. C. LLOYD, *Secretary.*

Published Half-yearly, 8vo, cloth, 16*s.* *net.*

The Journal of the Institution of Electrical Engineers.

Edited by P. F. ROWELL, *Secretary.*

The Proceedings of the Institution of Municipal and County Engineers.

Edited by THOMAS COLE, Assoc. M. Inst. C.E. *Secretary.*

Published Annually, 8vo, cloth, 21*s.* *net.*

The Transactions of the Institution of Mining and Metallurgy.

Edited by C. MCDERMID, *Secretary.*

Published Annually, boards, 21*s.* net, or half-bound, 25*s.* net.

Transactions of the Institution of Gas Engineers.

Edited by WALTER T. DUNN, *Secretary.*

Published Annually, 8vo, cloth, 10*s.* 6*d.* net.

Proceedings of the International Association for Testing Materials.

(English Edition.)

E. & F. N. SPON, Ltd., 57 Haymarket, London, S.W.

LONDON: PRINTED BY WILLIAM CLOWES AND SONS, LIMITED.

THE PHOSPHOR-BRONZE CO.

LIMITED

87 SUMNER STREET, SOUTHWARK

LONDON, S.E.

Sole Makers of the following ALLOYS:

PHOSPHOR BRONZE ("**Cog Wheel Brand**" and "**Vulcan**"). Ingots, Castings, Rolled Plates, Strip, Bars and Rods.

"DURO METAL" (Registered Title) **ALLOYS A, B & C.**
A Hard Bronze for Roll Bearings, Wagon Brasses, &c.

PHOSPHOR TIN & PHOSPHOR COPPER ("**Cog Wheel**" **Brand**). The best qualities made.

ALUMINIUM CASTING ALLOYS ("**Vulcan**" **Brand**). Ingots and Castings.

WHITE ANTIFRICTION ALLOYS

PLASTIC METAL ("**Vulcan**" **Brand**).
The Best Filling and Lining Metal in the Market.

BABBITT'S METAL ("**Vulcan**" **Brand**).
Made in Nine Grades.

"WHITE ANT" (Registered Mark) **Metal, No. 1.**
A superior Magnolia Metal.

PHOSPHOR WHITE LINING METAL.
Superior to any White Brass.

"WHITE ANT" BRONZE (**A White Metal**).
Superior to Fenton's Metal for Cast Car Bearings, &c.

CASTINGS in Bronze, Gun Metal, Brass & Aluminium

Branch Foundry:

CHESTER STREET, ASTON, BIRMINGHAM

D.

Editions),
ieber's.